TRAFFIC DATA

POSTED SPEED = 25 MPH
DESIGN SPEED = 25 MPH

DESIGN ADT	2010	2030
NASON CONNECTOR	8,200vpd	8,600vpd
ALLEN STREET	11,200vpd	11,300vpd
FEDERAL STREET	12,100vpd	12,200vpd

T= 2%
K= 9%

SAINT ALBANS
Vermont

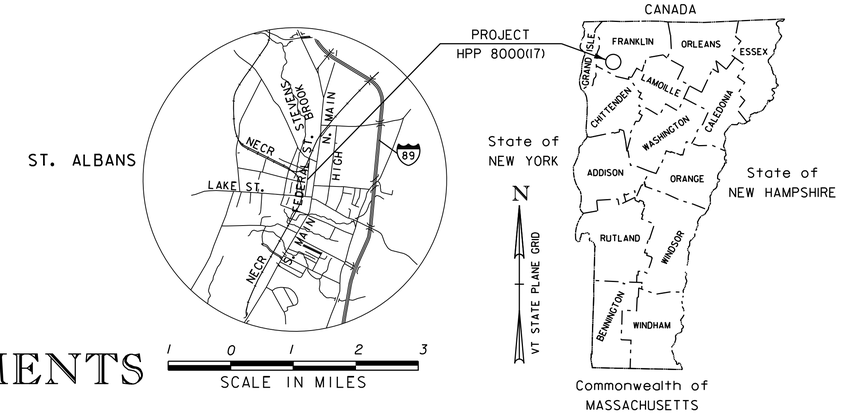

PROPOSED MOBILITY IMPROVEMENTS
CITY OF ST. ALBANS
COUNTY OF FRANKLIN

SOUTH MAIN STREET, NORTH MAIN STREET (CLASS I URBAN ARTERIALS)

LAKE STREET (CLASS II URBAN ARTERIAL)

LEMNAH DRIVE, ALLEN STREET, CATHERINE STREET, MARKET STREET (LOCAL ROADS)

FEDERAL STREET (CLASS II TOWN HIGHWAY) &

LOWER NEWTON STREET (CLASS I TOWN HIGHWAY)

BEGINNING AT A POINT ON SOUTH MAIN STREET (US 7) IN THE CITY OF ST. ALBANS, APPROXIMATELY 1.7 MILES NORTH OF THE GEORGIA TOWN LINE, CREATING A NEW CONNECTION AT SOUTH MAIN ST ACROSS FROM THE I-89 CONNECTOR TO THE NASON STREET AND LEMNAH DRIVE INTERSECTION, AND CONTINUING NORTHERLY ALONG LEMNAH DRIVE, TO ALLEN STREET, CATHERINE STREET, FEDERAL STREET, AND LOWER NEWTON STREET UNTIL RECONNECTING WITH US 7 (NORTH MAIN STREET) FROM LOWER NEWTON ROAD.
LENGTH OF PROJECT: 9200 FT = 1.74 MILES

PROJECT DESCRIPTION

WORK TO BE PERFORMED UNDER THIS PROJECT INCLUDES GRADING, CURBING, SIDEWALK, DRAINAGE, SEWER AND WATER IMPROVEMENTS, SUBBASE, AND PAVEMENT ON NEW HORIZONTAL AND VERTICAL ALIGNMENT, AS WELL AS REHABILITATION AND OVERLAY AND WIDENING OF EXISTING STREETS, NEW TRAFFIC SIGNALS, LIGHTING, RAIL CROSSINGS, SIGNS, STRIPING, LANDSCAPING, A NEW ROUNDABOUT, AND A BOX CULVERT OVER STEVENS BROOK.

NASON ST. CONNECTOR POB STA 100+00.00 =
SOUTH MAIN ST. (US 7) POT 902+46.00
BEGIN PROJECT

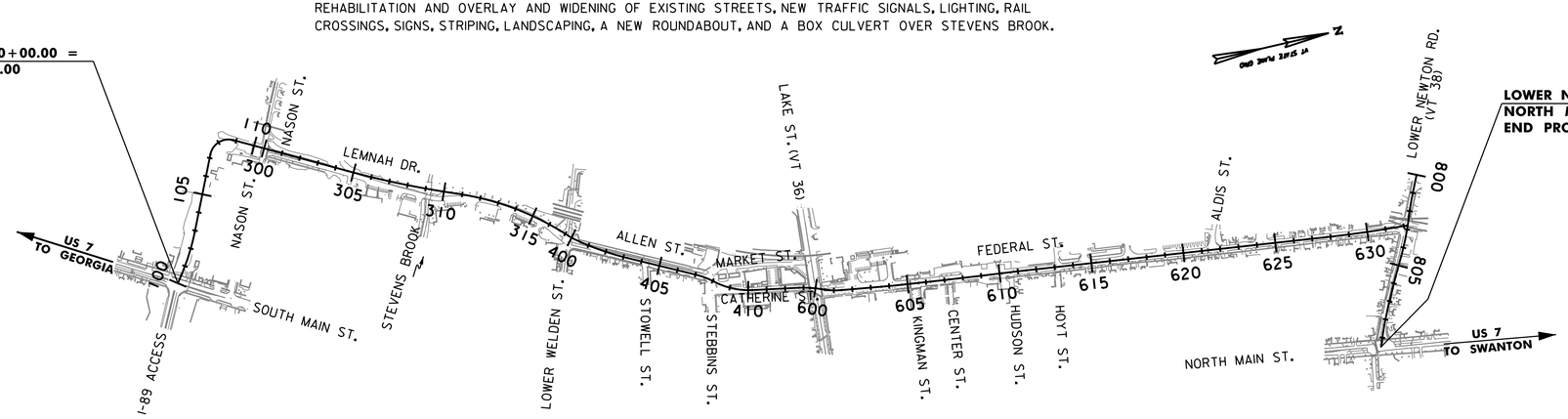

LOWER NEWTON ROAD POE STA 809+49.77 =
NORTH MAIN ST. (US 7) POT STA 1003+05.09
END PROJECT

PLAN
400 0 400
SCALE IN FEET

THESE PLANS ARE SUBJECT TO SUCH ENGINEERING CHANGES AS MAY BE REQUIRED BY THE FEDERAL HIGHWAY ADMINISTRATION OR THE DIRECTOR OF PROGRAM DEVELOPMENT.

CONSTRUCTION IS TO BE CARRIED ON IN ACCORDANCE WITH THESE PLANS AND THE STANDARD SPECIFICATIONS FOR CONSTRUCTION DATED 2011, AS APPROVED BY THE FEDERAL HIGHWAY ADMINISTRATION ON JULY 20, 2011 FOR USE ON THIS PROJECT, INCLUDING ALL SUBSEQUENT REVISIONS AND SUCH REVISED SPECIFICATIONS AND SPECIAL PROVISIONS AS ARE INCORPORATED IN THESE PLANS.

TEST LEVEL: 2

PRELIMINARY PLANS
MARCH 2016

SURVEYED BY : VHB, INC.
SURVEYED DATE : 2010
UPDATED: 2012

DATUM
VERTICAL NAVD 1929
HORIZONTAL NAD 1983

vhb

PROJECT MANAGER : M. A. COLGAN

PROJECT NAME : ST. ALBANS
PROJECT NUMBER : HPP 8000(17)

SHEET 1 OF 230 SHEETS

VHB 57414.00

INDEX OF SHEETS

1	TITLE SHEET
2	INDEX OF SHEETS
3	CONVENTIONAL SYMBOLOGY LEGEND SHEET
4-5	NOTES SHEET
6-13	TYPICAL SECTION SHEETS
14-19	CONSTRUCTION DETAILS SHEETS
20	ISLAND DETAIL SHEET
21	ALIGNMENT POINTS SHEET
22-27	ALIGNMENT LAYOUT SHEETS
28-43	ROADWAY LAYOUT SHEETS
44-49	INTERSECTION GRADING PLANS
50-69	PROFILES
70-76	DRAINAGE NOTES
77-93	GENERAL PLANS
94-109	SIGNING & STRIPING PLANS
110-124	TRAFFIC SIGNAL PLANS
125	TRAFFIC CONTROL NOTES
126	CONSTRUCTION APPROACH SIGNING LAYOUT
128	EPSC NARRATIVE
129-131	EPSC DETAIL SHEETS
132-149	EPSC PLANS
150-216	CROSS SECTIONS
217-230	STEVENS BROOK CULVERT REPLACEMENT PLANS
	UTILITY PLANS (BY ALDRICH & ELLIOTT)
	STREETSCAPE PLANS (BY SE GROUP)

APPLICABLE VTRANS STANDARD DRAWINGS

A-76	STANDARDS FOR TOWN & DEVELOPMENT ROADS	3/3/2003	T-134	LIGHT POLE & TRANSFORMER BASE DETAILS	12/21/2015	D-3	TREATED GUTTERS	6/1/1994
B-71	STANDARD FOR RESIDENTIAL AND COMMERCIAL DRIVES	7/8/2005	T-17	TRAFFIC CONTROL MISCELLANEOUS DETAILS	8/6/2012	D-30	UNDERDRAIN CONSTRUCTION DETAILS	8/13/2007
D-20	HIGHWAY CROSSING FOR UNDERGROUND UTILITIES	3/3/2003	T-2	TRAFFIC SIGN GENERAL NOTES	2/12/2016	D-33	REINFORCED CONCRETE STRAIGHT HEADWALL	3/12/2007
D-22	SANITARY SEWER SYSTEMS	3/10/1995	T-24	TRAFFIC CONTROL FOR MAINTENANCE PAVEMENT MARKING OPERATION	8/6/2012	D-34	REINFORCED CONCRETE CRADLE HEADWALL	3/12/2007
E-121	STANDARD SIGN PLACEMENT - CONVENTIONAL ROAD	8/8/1995	T-28	CONSTRUCTION SIGN DETAILS	8/6/2012	D-4	VARIOUS DRAINAGE DETAILS	8/13/2007
E-127	ROUTE MARKINGS AT RURAL INTERSECTIONS	8/8/1995	T-30	CONSTRUCTION SIGN DETAILS	8/6/2012	D-6	REINFORCED CONCRETE DROP INLET W/GRATE (DITCHES)	6/1/1994
E-131B	BICYCLE GUIDE SIGN DETAILS	5/30/2003	T-35	CONSTRUCTION ZONE LONGITUDINAL DROP-OFFS	8/6/2012	D-8	REINFORCED CONCRETE DROP INLET WITH PRECAST COVER & GRATE	1/3/2000
E-136B	STATE ROUTE MARKER SIGN DETAILS	8/8/1995	T-36	CONSTRUCTION ZONE LONGITUDINAL DROP-OFFS FOR PAVING	8/6/2012	F-2	CHAIN LINK FENCE, TYPE I DETAILS	6/1/1994
E-136C	STATE NUMBERED TOWN HIGHWAY SIGN DETAILS	8/8/1995	T-45	SQUARE TUBE SIGN POST AND ANCHOR	1/2/2013	F-4	CHAIN LINK FENCE, TYPE II DETAILS	6/1/1994
E-140	REGULATORY SIGN DETAILS	8/30/1996	T-56	STANDARD SIGN PLACEMENT	10/26/2015	J-1	PROJECT AND BOUNDARY MARKERS	6/1/1994
E-142	REGULATORY SIGN DETAILS	9/20/1995	T-92	ROUTE MARKER FRAME DETAILS	10/26/2015	J-3	MAIL BOX SUPPORT DETAILS	8/7/1995
E-143	REGULATORY SIGN DETAILS	6/15/2004	T-93	DESTINATION SIGN DETAILS	10/26/2015			
E-144	REGULATORY SIGN DETAILS	3/29/1999	RR-1	RAIL CROSSING HIGHWAY STANDARDS PAVED CROSSING FOR GRAVEL OR PAVED HIGHWAYS	6/1/1994			
E-145A	REGULATORY SIGN DETAILS - LANE USE CONTROL SIGNS	12/23/1994	C-3A	SIDEWALK RAMPS	3/10/2008			
E-146	REGULATORY SIGN DETAILS	9/20/1995	C-3B	SIDEWALK RAMPS AND MEDIAN ISLANDS	3/10/2008			
E-170	TRAFFIC CONTROL SIGNALS PEDESTAL POST MOUNTED	11/4/1999	B-12	SIDE ROAD INTERSECTION, DEPRESSED RAMP	6/1/1994			
E-171A	TRAFFIC CONTROL SIGNALS GENERAL NOTES & DETAILS	8/9/1995	B-17	GUARDRAIL, BRIDGES, REST AREA, TURNOUTS	2/23/1995			
E-171B	TRAFFIC CONTROL SIGNALS MISC. DETAILS	8/9/1995	B-5	SLOPE GRADING, EMBANKMENTS, MUCK	6/1/1994			
E-173	PULL BOXES AND JUNCTION BOXES	8/9/1995	C-10	CURBING	2/11/2008			
E-175	POWER DROP STANCHIONS	6/8/2009	C-2A	PORTLAND CEMENT CONCRETE SIDEWALK DRIVE ENTRANCES WITH SIDEWALK ADJACENT TO CURB	10/14/2005			
E-190	RAILROAD CROSSING SIGNS AND PAVEMENT MARKINGS	6/30/2003	C-2B	PORTLAND CEMENT CONCRETE SIDEWALK DRIVE ENTRANCES WITH SIDEWALK AND GREEN STRIP	10/14/2005			
E-191	PAVEMENT MARKING DETAILS	2/1/1999	D-10	REINFORCED CONCRETE DROP INLET TOP FOR BITUMINOUS CONCRETE CURB & GRANITE SLOPE EDGING	6/1/1994			
E-192	PAVEMENT MARKING DETAILS	10/12/2000	D-11	STEEL OR IRON GRATES& COVERS (TYPE A)	6/1/1994			
E-193	PAVEMENT MARKING DETAILS	8/18/1995	D-13	CONCRETE CATCH BASIN	1/3/2000			
T-1	TRAFFIC CONTROL GENERAL NOTES	8/6/2012	D-15	PRECAST REINF CONC. MH-GRATES, CAST IRON GRATE WITH FRAME, TYPE D & E	6/1/1994			
T-10	CONVENTIONAL ROADS CONSTRUCTION APPROACH SIGNING	8/6/2012						
T-133	LIGHT POLE FOUNDATION DETAILS	12/21/2015						

PROJECT NAME: ST. ALBANS
PROJECT NUMBER: HPP 8000(17)

FILE NAME: 57414_INDEX.dgn
PROJECT LEADER: J. D. SALADINO
DESIGNED BY: D.M. PECK
INDEX OF SHEETS

PLOT DATE: 3/4/2016
DRAWN BY: A.J. GOUDREAU
CHECKED BY: M.J. SERVETAS
SHEET 2 OF 230

GENERAL INFORMATION

SYMBOLOGY LEGEND NOTE

THE SYMBOLOGY ON THIS SHEET IS INTENDED TO COVER STANDARD CONVENTIONAL SYMBOLOGY. THE SYMBOLOGY IS USED FOR EXISTING & PROPOSED FEATURES WITH HEAVIER LINEWEIGHT, IN COMBINATION WITH PROJECT ANNOTATION, AS NOTED ON PROJECT PLAN SHEETS. THIS LEGEND SHEET COVERS THE BASICS. SYMBOLOGY ON PLANS MAY VARY, PLAN ANNOTATIONS AND NOTES SHOULD BE USED TO CLARIFY AS NEEDED.

R.O.W. ABBREVIATIONS (CODES) & SYMBOLS

POINT	CODE	DESCRIPTION
	CH	CHANNEL EASEMENT
	CONST	CONSTRUCTION EASEMENT
	CUL	CULVERT EASEMENT
	D&C	DISCONNECT & CONNECT
	DIT	DITCH EASEMENT
	DR	DRAINAGE EASEMENT
	DRIVE	DRIVEWAY EASEMENT
	EC	EROSION CONTROL
	HWY	HIGHWAY EASEMENT
	I&M	INSTALL & MAINTAIN EASEMENT
	LAND	LANDSCAPE EASEMENT
	R&RES	REMOVE & RESET
	R&REP	REMOVE & REPLACE
	SR	SLOPE RIGHT
	UE	UTILITY EASEMENT
	(P)	PERMANENT EASEMENT
	(T)	TEMPORARY EASEMENT
■	BNDNS	BOUND SET
⊡	BNDNS	BOUND TO BE SET
●	IPNS	IRON PIN SET
◎	IPNS	IRON PIN TO BE SET
⊠	CALC	EXISTING ROW POINT
○	PROW	PROPOSED ROW POINT
[LENGTH]		LENGTH CARRIED ON NEXT SHEET

COMMON TOPOGRAPHIC POINT SYMBOLS

POINT	CODE	DESCRIPTION
	APL	BOUND APPARENT LOCATION
	BM	BENCH MARK
	BND	BOUND
	CB	CATCH BASIN
	COMB	COMBINATION POLE
	DITHR	DROP INLET THROATED DNC
	EL	ELECTRIC POWER POLE
	FPOLE	FLAGPOLE
	GASFIL	GAS FILLER
	GP	GUIDE POST
	GSO	GAS SHUT OFF
	GUY	GUY POLE
	GUYW	GUY WIRE
	GV	GATE VALUE
	H	TREE HARDWOOD
	HCTRL	CONTROL HORIZONTAL
	HVCTRL	CONTROL HORIZ. & VERTICAL
	HYD	HYDRANT
	IP	IRON PIN
	IPIPE	IRON PIPE
	LI	LIGHT - STREET OR YARD
	MB	MAILBOX
	MH	MANHOLE (MH)
	MM	MILE MARKER
	PM	PARKING METER
		PERENNIAL - SINGLE
		PERENNIAL - PLANTING BED
	PMK	PROJECT MARKER
	POST	POST STONE/WOOD
	RRSIG	RAILROAD SIGNAL
	RRSL	RAILROAD SWITCH LEVER
	S	TREE SOFTWOOD
	SAT	SATELLITE DISH
	SHRUB	SHRUB
	SIGN	SIGN
	STUMP	STUMP
	TEL	TELEPHONE POLE
	TIE	TIE
	TSIGN	SIGN W/DOUBLE POST
	VCTRL	CONTROL VERTICAL
	WELL	WELL
	WSO	WATER SHUT OFF

THESE ARE COMMON VAOT SURVEY POINT SYMBOLS FOR EXISTING FEATURES, ALSO USED FOR PROPOSED FEATURES WITH HEAVIER LINEWEIGHT, IN COMBINATION WITH PROPOSED ANNOTATION.

PROPOSED GEOMETRY CODES

CODE	DESCRIPTION
PC	POINT OF CURVATURE
PI	POINT OF INTERSECTION
CC	CENTER OF CURVE
PT	POINT OF TANGENCY
PCC	POINT OF COMPOUND CURVE
PRC	POINT OF REVERSE CURVE
POB	POINT OF BEGINNING
POE	POINT OF ENDING
STA	STATION PREFIX
AH	AHEAD STATION SUFFIX
BK	BACK STATION SUFFIX
D	CURVE DEGREE OF (100FT)
R	CURVE RADUIS OF
T	CURVE TANGENT LENGTH
L	CURVE LENGTH OF
E	CURVE EXTERNAL DISTANCE

UTILITY SYMBOLOGY

UNDERGROUND UTILITIES

UT	TELEPHONE
UE	ELECTRIC
UC	CABLE (TV)
UEC	ELECTRIC+CABLE
UET	ELECTRIC+TELEPHONE
UCT	CABLE+TELEPHONE
UECT	ELECTRIC+CABLE+TELEP.
G	GAS LINE
W	WATER LINE
S	SANITARY SEWER (SEPTIC)

ABOVE GROUND UTILITIES (AERIAL)

T	TELEPHONE
E	ELECTRIC
C	CABLE (TV)
EC	ELECTRIC+CABLE
ET	ELECTRIC+TELEPHONE
AER E&T	ELECTRIC+TELEPHONE
CT	CABLE+TELEPHONE
ECT	ELECTRIC+CABLE+TELEP.
	UTILITY POLE GUY WIRE

PROJECT CONSTRUCTION SYMBOLOGY

PROJECT DESIGN & LAYOUT SYMBOLOGY

CZ	CLEAR ZONE
	PLAN LAYOUT MATCHLINE

PROJECT CONSTRUCTION FEATURES

	TOP OF CUT SLOPE
	TOE OF FILL SLOPE
	STONE FILL
	BOTTOM OF DITCH ℄
	CULVERT PROPOSED
	STRUCTURE SUBSURFACE
PDF PDF	PROJECT DEMARCATION FENCE
BF BF	BARRIER FENCE
	TREE PROTECTION ZONE (TPZ)
	STRIPING LINE REMOVAL
	SHEET PILES

CONVENTIONAL BOUNDARY SYMBOLOGY

BOUNDARY LINES

TOWN LINE	TOWN BOUNDARY LINE
COUNTY LINE	COUNTY BOUNDARY LINE
STATE LINE	STATE BOUNDARY LINE
	PROPOSED STATE R.O.W. (LIMITED ACCESS)
	PROPOSED STATE R.O.W.
	STATE ROW (LIMITED ACCESS)
	STATE ROW
	TOWN ROW
	PERMANENT EASEMENT LINE (P)
	TEMPORARY EASEMENT LINE (T)
	SURVEY LINE
P/L P/L	PROPERTY LINE (P/L)
SR SR SR	SLOPE RIGHTS
6f 6f	6F PROPERTY BOUNDARY
4f 4f	4F PROPERTY BOUNDARY
HAZ HAZ	HAZARDOUS WASTE

EPSC LAYOUT PLAN SYMBOLOGY

EPSC MEASURES

	FILTER CURTAIN
	SILT FENCE
	SILT FENCE WOVEN WIRE
	CHECK DAM
	DISTURBED AREAS REQUIRING RE-VEGETATION
	EROSION MATTING

ENVIRONMENTAL RESOURCES

	WETLAND BOUNDARY
	RIPARIAN BUFFER ZONE
	WETLAND BUFFER ZONE
	SOIL TYPE BOUNDARY
T&E	THREATENED & ENDANGERED SPECIES
HAZ HAZ	HAZARDOUS WASTE AREA
AG	AGRICULTURAL LAND
HABITAT	FISH & WILDLIFE HABITAT
FLOOD PLAIN	FLOOD PLAIN
OHW	ORDINARY HIGH WATER (OHW)
	STORM WATER
	USDA FOREST SERVICE LANDS
	WILDLIFE HABITAT SUIT/CONN

ARCHEOLOGICAL & HISTORIC

ARCH	ARCHEOLOGICAL BOUNDARY
HISTORIC DIST	HISTORIC DISTRICT BOUNDARY
HISTORIC	HISTORIC AREA
H	HISTORIC STRUCTURE

CONVENTIONAL TOPOGRAPHIC SYMBOLOGY

EXISTING FEATURES

	ROAD EDGE PAVEMENT
	ROAD EDGE GRAVEL
	DRIVEWAY EDGE
	DITCH
	FOUNDATION
	FENCE (EXISTING)
	FENCE WOOD POST
	FENCE STEEL POST
	GARDEN
	ROAD GUARDRAIL
	RAILROAD TRACKS
	CULVERT (EXISTING)
	STONE WALL
	WALL
	WOOD LINE
	BRUSH LINE
	HEDGE
	BODY OF WATER EDGE
	LEDGE EXPOSED

vhb

PROJECT NAME:	ST. ALBANS
PROJECT NUMBER:	HPP 8000(17)

FILE NAME: 57414_LegendSheet.dgn	PLOT DATE: 3/4/2016
PROJECT LEADER: M.A. COLGAN	DRAWN BY: A.J. GOUDREAU
DESIGNED BY: VTRANS	CHECKED BY: D.M. PECK
CONVENTIONAL SYMBOLOGY LEGEND	SHEET 3 OF 230

GENERAL NOTES

1. ALL MATERIALS AND CONSTRUCTION SHALL CONFORM TO THE STATE OF VERMONT AGENCY OF TRANSPORTATION'S STANDARD SPECIFICATIONS FOR CONSTRUCTION, DATED 2011, AND ITS LATEST REVISIONS, AND SUCH SPECIFICATIONS AND SPECIAL PROVISIONS AS ARE INCORPORATED IN THE FINAL CONTRACT DOCUMENTS.

2. PER ADA GUIDELINES, SIDEWALK CROSS SLOPES SHALL NOT EXCEED 2%.

3. ANY WASTE MATERIAL SHALL BE REMOVED AND HAULED TO A PREVIOUSLY APPROVED FACILITY.

UTILITY NOTES

1. THE LOCATIONS, SIZES, AND TYPES OF EXISTING UTILITIES ARE SHOWN AS AN APPROXIMATE REPRESENTATION ONLY. THE OWNER OR DESIGN ENGINEER HAVE NOT INDEPENDENTLY VERIFIED ALL OF THIS INFORMATION AS SHOWN ON THE PLANS. THE UTILITY INFORMATION SHOWN DOES NOT GUARANTEE THE ACTUAL EXISTENCE, SERVICEABILITY, OR OTHER DATA CONCERNING THE UTILITIES, NOR DOES IT GUARANTEE AGAINST THE POSSIBILITY THAT ADDITIONAL UTILITIES MAY BE PRESENT THAT ARE NOT SHOWN ON THE PLANS. PRIOR TO ORDERING MATERIALS AND BEGINNING CONSTRUCTION, THE CONTRACTOR SHALL VERIFY AND DETERMINE THE EXACT LOCATIONS, SIZES, AND ELEVATIONS OF THE POINTS OF CONNECTIONS TO EXISTING UTILITIES AND, SHALL CONFIRM THAT THERE ARE NO INTERFERES WITH EXISTING UTILITIES AND THE PROPOSED UTILITY ROUTES, INCLUDING ROUTES WITHIN THE PUBLIC RIGHTS OF WAY.

2. WHERE AN EXISTING UTILITY IS FOUND TO CONFLICT WITH THE PROPOSED WORK, OR EXISTING CONDITIONS DIFFER FROM THOSE SHOWN SUCH THAT THE WORK CANNOT BE COMPLETED AS INTENDED, THE LOCATION, ELEVATION, AND SIZE OF THE UTILITY SHALL BE ACCURATELY DETERMINED AND THE INFORMATION FURNISHED IN WRITING TO THE RESIDENT ENGINEER FOR THE RESOLUTION OF THE CONFLICT.

3. SET CATCH BASIN RIMS, AND INVERTS OF SEWERS, DRAINS, AND DITCHES IN ACCORDANCE WITH ELEVATIONS ON THE GENERAL PLANS, CROSS SECTIONS AND DRAINAGE NOTES.

4. RIM ELEVATIONS FOR DRAIN AND SEWER MANHOLES, WATER VALVE COVERS, GAS GATES, ELECTRIC AND TELEPHONE PULL BOXES, AND MANHOLES, AND OTHER SUCH ITEMS, ARE APPROXIMATE AND SHALL BE SET/RESET AS FOLLOWS:
   A. PAVEMENTS AND CONCRETE SURFACES: FLUSH
   B. ALL SURFACES ALONG ACCESSIBLE ROUTES: FLUSH
   C. LANDSCAPE, LOAM AND SEED, AND OTHER EARTH SURFACE AREAS: ONE INCH ABOVE
   SURROUNDING AREA AND TAPER EARTH TO THE RIM ELEVATION.

5. ALL DRAINAGE AND SANITARY STRUCTURE INTERIOR DIAMETERS (4' MIN.) SHALL BE VERIFIED BY THE MANUFACTURER BASED ON THE PIPE CONFIGURATIONS SHOWN ON THESE PLANS AND LOCAL MUNICIPAL STANDARDS.

6. THE USE OF BRICK AND MORTAR TO ADJUST THE ELEVATION OF DRAINAGE OR SANITARY STRUCTURES IS PROHIBITED. ALL ELEVATION ADJUSTMENTS SHALL BE MADE USING EITHER GRADE RINGS OR A SYNTHETIC RISER.

7. ALL CONNECTIONS BETWEEN PRECAST DRAINAGE STRUCTURES AND NEW DRAINAGE PIPES SHALL BE A BOOTED CONNECTION. CORING AND BOOTS WILL BE INCIDENTAL TO THE PIPE.

8. CONTRACTOR IS RESPONSIBLE FOR IDENTIFYING AND ADJUSTING ALL CURB STOPS, WATER VALVES, MANHOLES, & DRAINAGE STRUCTURES WITHIN THE PROJECT LIMITS TO TO THE FINAL GRADE ELEVATION.

9. CURRENT UTILITY CONTACT INFORMATION IS PROVIDED AS FOLLOWS. THE CONTRACTOR SHALL BE RESPONSIBLE FOR ACQUIRING ADDITIONAL AND/OR MORE UP TO DATE CONTACT INFORMATION AS NEEDED.

   CITY OF ST. ALBANS DIRECTOR OF PUBLIC WORKS
   ALLEN ROBTOY: 802-524-1500 X267
   A.ROBTOY@STALBANSVT.COM

   GREEN MOUNTAIN POWER
   ROSE DUBOIS: 802-527-6348 X190
   ROSE.DUBOIS@GREENMOUNTAINPOWER.COM

   VERMONT GAS
   LEE BROWN: 802-863-4511
   LBROWN@VERMONTGAS.COM

   FAIRPOINT
   KYLE BOUCHARD: 802-863-0702
   KBOUCHARD @FAIRPOINT.COM

   COMCAST
   CONRAD RITCHIE: 802-846-2414
   CONRAD.RITCHIE@CABLE.COMCAST.COM

   LEVEL 3
   RICK MILLER: 702-888-7568
   RICK.MILLER@LEVEL3.COM

   VTEL
   JOSEPH C. HARBESON: 802-885-7740
   JHARBES@VERMONTEL.COM

10. EXISTING OVERHEAD FACILITIES OWNED BY THE COMPANIES NOTED ABOVE, PASS THROUGH THE PROJECT. THE CONTRACTOR IS ADVISED TO USE CAUTION WHILE WORKING AROUND OVERHEAD UTILITY LINES.

11. EXISTING UNDERGROUND FACILITIES OWNED BY FAIR POINT COMMUNICATIONS, GREEN MOUNTAIN POWER, VERMONT GAS AND THE CITY OF ST ALBANS (SANITARY AND STORM SEWER & WATER) PASS THROUGH THE PROJECT. THE CONTRACTOR IS ADVISED TO USE CAUTION WHILE WORKING AROUND UNDERGROUND UTILITY LINES. THE CONTRACTOR IS ALSO ADVISED THAT TEMPORARY SHORING AND SUPPORT OF UNDERGROUND UTILITIES MAY BE REQUIRED WHEN PERFORMING TRENCH EXCAVATIONS SO AS TO PREVENT DAMAGE TO THESE UTILITIES.

12. EXISTING TELEPHONE MANHOLES OWNED BY FAIR POINT COMMUNICATIONS MAY REQUIRE MINOR ADJUSTMENTS TO MATCH THE NEW FINISHED PAVEMENT ELEVATIONS. NECESSARY ELEVATION ADJUSTMENTS TO THESE TELEPHONE MANHOLES BY THE CONTRACTOR SHALL BE COORDINATED WITH REPRESENTATIVES FROM FAIR POINT.

13. EXISTING SEWER MANHOLES OWNED BY THE CITY OF ST. ALBANS MAY REQUIRE ADJUSTMENTS TO MATCH THE NEW FINISHED PAVEMENT ELEVATION. NECESSARY ELEVATION ADJUSTMENTS TO CITY-OWNED SEWER MANHOLES SHALL BE PERFORMED BY THE CONTRACTOR IN ACCORDANCE WITH VTRANS STANDARDS AND CONSTRUCTION SPECIFICATIONS.

14. EXISTING WATER VALVES OWNED BY THE CITY OF ST. ALBANS MAY REQUIRE ADJUSTMENTS TO MATCH THE NEW FINISHED PAVEMENT ELEVATION. NECESSARY ELEVATION ADJUSTMENTS TO CITY-OWNED WATER VALVES SHALL BE PERFORMED BY THE CONTRACTOR IN ACCORDANCE WITH VTRANS STANDARDS AND CONSTRUCTION SPECIFICATIONS.

15. EMPLOYEES OR AGENTS OF THOSE OWNING AERIAL OR UNDERGROUND FACILITIES ARE TO BE ALLOWED FREE AND FULL ACCESS WITHIN THE PROJECT LIMITS WITH THE TOOLS, MATERIALS, AND EQUIPMENT NECESSARY TO INSTALL, OPERATE, MAINTAIN, PLACE, REPLACE, RELOCATE, AND REMOVE THEIR FACILITIES.

16. THERE WILL BE NO EXTRA COMPENSATION PAID TO THE CONTRACTOR FOR ANY INCONVENIENCE CAUSED BY WORKING AROUND AND WITH THE OWNERS OF THESE UTILITY FACILITIES.

17. THE CONTRACTOR IS ADVISED THAT EXPLORATORY EXCAVATION TO LOCATE EXISTING UNDERGROUND FACILITIES WILL BE NECESSARY TO PROTECT THESE FACILITIES FROM DAMAGE AND TO VERIFY THE LOCATIONS OF MAJOR EQUIPMENT FOUNDATIONS PRIOR TO ANY EQUIPMENT BEING ORDERED. WHERE DIRECTED BY THE ENGINEER, THESE UTILITIES SHALL BE LOCATED AND/OR EXPOSED BY METHODS SUCH AS AIR/VACUUM EXCAVATION AND/OR HAND DIGGING TO DETERMINE THEIR EXACT LOCATION.

18. CONFLICTS BETWEEN THE PROPOSED WORK AND EXISTING PRESSURIZED GAS LINES ARE ANTICIPATED ON THIS PROJECT AND THE CONTRACTOR SHALL MAKE ARRANGEMENTS TO HAVE GAS COMPANY PERSONNEL PRESENT WHEN CONDUCTING EXPLORATORY EXCAVATIONS TO DETERMINE THE EXACT LOCATIONS OF THE GAS LINES. IF GAS LINE RELOCATIONS ARE NECESSARY THE CONTRACTOR SHALL ACCOMMODATE THE GAS COMPANY NEEDS WITH RESPECT TO EXCAVATION AND BACKFILL FOR THE EXISTING AND RELOCATED GAS LINES.

19. ACT NO. 86 OF 1987 (30 VSA CHAPTER 86) (7/32 DIG SAFE 9/32) REQUIRES THAT NOTICE BE GIVEN PRIOR TO MAKING AN EXCAVATION. IT IS SUGGESTED THAT THE PERMIT HOLDER OR HIS/HER CONTRACTOR TELEPHONE 1-888-344-7233 AT LEAST 48 HOURS BEFORE, AND NOT MORE THAN 30 DAYS BEFORE, BEGINNING ANY EXCAVATION AT ANY LOCATION.

20. SHOULD THE CONTRACTOR DESIRE ADDITIONAL ADJUSTMENTS OF THE UTILITY FACILITIES FOR HIS/HER CONVENIENCE, PROPER ARRANGEMENTS SHALL BE MADE IN CONFORMANCE WITH SUBSECTION 105.07 OF THE STANDARD SPECIFICATIONS FOR CONSTRUCTION.

COORDINATION WITH RAILROAD

1. WORK IDENTIFIED IN THE PROJECT PLANS AND DOCUMENTS ON NASON ST, LOWER WELDEN ST, LAKE ST AND ON THE WEST SIDES OF LEMNAH DR, ALLEN ST, AND MARKET ST INCLUDE IMPACTS ALONG AND ACROSS RAILROAD PROPERTY. THE CONTRACTOR SHALL BE RESPONSIBLE FOR SUBMITTING AN APPLICATION AND ALL ASSOCIATED FEES FOR A "CONTRACTORS ACCESS/OCCUPANCY ON RAILROAD PROPERTY" PERMIT FROM AND TO GENESEE & WYOMING RAILROAD SERVICES INC.

   THE CONTRACTOR SHALL COMPLETE AND SUBMIT THE GENESEE & WYOMING CONTRACTORS ACCESS/OCCUPANCY ON RAILROAD PROPERTY FORM PRIOR TO COMMENCING ANY WORK ONCE THE CONTRACT HAS BEEN AWARDED.

   THE FOLLOWING IS AN EXCERPT FROM THE GENESEE & WYOMING WEBSITE REGARDING ACCESSING THE RAILROAD PROPERTY:

   "ANY ENTRY OR CONSTRUCTION ACTIVITIES ON RAILROAD RIGHT OF WAY MUST BE AUTHORIZED BY THE RAILROAD IN WRITING. WRITTEN AUTHORIZATION IS OBTAINED THROUGH A RIGHT OF ENTRY PERMIT OR CONTRACTOR OCCUPANCY/ACCESS AGREEMENT. THE APPLICATION IS ACCESSIBLE VIA THE LINK PROVIDED BELOW.

   THE APPLICANT MUST SUBMIT THE COMPLETED APPLICATION TO THE REAL ESTATE DEPARTMENT INCLUDING A CHECK OR MONEY ORDER, TO COVER THE NON-REFUNDABLE FEE OF $1,500 MADE PAYABLE TO THE RAILROAD. THE APPLICATION MUST INCLUDE RAILROAD MILEPOST, RAILROAD SUBDIVISION, AND SCOPE OF WORK. IF ANY OF THESE ITEMS ON THE APPLICATION ARE INCOMPLETE, THE APPLICATION WILL BE IMMEDIATELY REJECTED.

   THE STANDARD TERM FOR A RIGHT OF ENTRY PERMIT OR CONTRACTOR OCCUPANCY ACCESS AGREEMENT IS SIXTY (60) DAYS. LONGER TERMS ARE REVIEWED ON A CASE BY CASE BASIS AND MAY BE ASSESSED ADDITIONAL FEES.

   UPON APPROVAL OF THE APPLICATION, THE REAL ESTATE DEPARTMENT WILL DRAFT AN AGREEMENT AND FORWARD TO THE APPLICANT FOR SIGNATURE. APPLICATION DOES NOT GUARANTEE APPROVAL. THE APPLICANT MUST THEN RETURN THE SIGNED DOCUMENT TO THE REAL ESTATE DEPARTMENT ALONG WITH THE PERTINENT CERTIFICATE OF INSURANCE OUTLINED IN THE AGREEMENT. ONCE IN RECEIPT OF THESE DOCUMENTS, THE AGREEMENT WILL THEN BE EXECUTED ON BEHALF OF THE RAILROAD.

   FOR "STANDARD PROCESSING", THE ENTIRE PROCESS TAKES BETWEEN 6-8 WEEKS. "EXPEDITED PROCESSING" WILL REDUCE THE PROCESSING TIME TO BETWEEN 1-2 WEEKS AND COSTS AN ADDITIONAL $1,750. IF THE APPLICATION AND PLANS REQUIRE ENGINEERING APPROVAL, AND ARE RETURNED TO APPLICANT FOR REVISIONS IN ORDER TO MEET REQUIRED SPECIFICATIONS, THE EXPEDITED PROCESS COULD TAKE LONGER THAN 2 WEEKS.

2. THE CONTRACTOR SHALL BE RESPONSIBLE FOR ALL INSURANCE AND FLAGGING REQUIREMENTS STIPULATED BY THE RAILROAD FOR WORK WITHIN THEIR ROW. SEE INSURANCE AND RAILROAD AGREEMENT SECTIONS OF THE CONTRACT DOCUMENTS FOR MORE INFORMATION.

3. MATERIAL EXCAVATED FROM WITHIN THE RAILROAD ROW OR SURFACE WATER EXPENDED DURING CONSTRUCTION MAY CONTAIN CONTAMINATED MATERIAL. CONTAMINATED MATERIAL IF FOUND SHALL BE HANDLED BY THE CONTRACTOR IN ACCORDANCE WITH THE SOIL MANAGEMENT PLAN WHICH IS PART OF THE CONTRACT DOCUMENTS.

CONSTRUCTION NOTES

1. THE CONTRACTOR SHALL ERECT, MAINTAIN, REMOVE, AND/OR RESET AS REQUIRED ALL ON-PROJECT CONSTRUCTION SIGNS AND BARRICADES. ALL SIGNS AND BARRICADES SHALL BE INSPECTED AND REPAIRED DAILY. ALL SIGNS AND BARRICADES SHALL CONFORM TO THE LATEST VERSION OF THE MUTCD AND SHALL BE CLEANED OF DUST AND DEBRIS WEEKLY.

2. ANY EXISTING SIGNS NOT REUSED SHALL REMAIN THE PROPERTY OF THE CITY OF ST. ALBANS. THESE SIGNS SHALL BE REMOVED BY THE CONTRACTOR AND STOCKPILED FOR REMOVAL BY THE CITY. STOCKPILE LOCATION TO BE DETERMINED BY THE CITY.

3. FULL ACCESS TO ALL DRIVES WITHIN THE PROJECT LIMITS SHALL BE MAINTAINED AT ALL TIMES. IF FULL ACCESS CANNOT BE MAINTAINED, THE CONTRACTOR SHALL CONTACT AND COORDINATE WITH THE BUSINESS OR PROPERTY OWNER AT LEAST 24 HOURS IN ADVANCE OF TEMPORARILY CLOSING OFF THE ACCESS.

4. THE CONTRACTOR SHALL VERIFY THE LOCATION OF ALL BURIED AND AERIAL UTILITIES AND POLES PRIOR TO STARTING WORK. THE CONTRACTOR SHALL COORDINATE WITH ALL UTILITY OWNERS TO CONFIRM ACTUAL LOCATIONS PRIOR TO CONSTRUCTION.

   DIG-SAFE (1-888-344-7233)

   CONTRACTOR SHALL COORDINATE THE ADJUSTMENT OF ANY EXISTING GATE VALVES WITH THE OWNER OF THE GAS LINES. ADJUSTMENT OF GAS VALVES SHALL BE DONE BY THE GAS COMPANY.

5. THE FOLLOWING IS A LIST OF CITY CONTACTS THE CONTRACTOR SHALL NOTIFY PRIOR TO BEGINNING ANY EXCAVATION. THE CITY OF ST. ALBANS SHALL REQUIRE AT LEAST 7 DAYS NOTIFICATION:

   CITY OF ST. ALBANS:
   ALLEN ROBTOY, DIRECTOR OF PUBLIC WORKS;
   (802) 524-1500, EXT. 267
   CHIP SAWYER, DIRECTOR OF PLANNING AND DEVELOPMENT;
   (802) 524-1500, EXT. 259

6. CONTRACTOR SHALL BE RESPONSIBLE FOR SITE SECURITY AND JOB SAFETY. CONSTRUCTION ACTIVITIES SHALL BE IN ACCORDANCE WITH OSHA STANDARDS, STATE & LOCAL REQUIREMENTS.

7. AREAS OUTSIDE THE LIMITS OF PROPOSED WORK DISTURBED BY THE CONTRACTOR'S OPERATIONS SHALL BE RESTORED BY THE CONTRACTOR TO THEIR ORIGINAL CONDITION AT THE CONTRACTOR'S EXPENSE.

8. IN THE EVENT THAT SUSPECTED CONTAMINATED SOIL, GROUNDWATER, AND OTHER MEDIA ARE ENCOUNTERED DURING EXCAVATION AND CONSTRUCTION ACTIVITIES BASED ON VISUAL, OLFACTORY, OR OTHER EVIDENCE, THE CONTRACTOR SHALL STOP WORK IN THE VICINITY OF THE SUSPECT MATERIAL TO AVOID FURTHER SPREADING OF THE MATERIAL, AND SHALL NOTIFY THE RESIDENT ENGINEER IMMEDIATELY SO THAT THE APPROPRIATE TESTING AND SUBSEQUENT ACTION CAN BE TAKEN.

9. DAMAGE RESULTING FROM CONTRACTOR CONSTRUCTION LOADS SHALL BE REPAIRED BY THE CONTRACTOR AT NO ADDITIONAL COST TO OWNER.

10. CONTRACTOR SHALL CONTROL STORMWATER RUNOFF DURING CONSTRUCTION TO PREVENT ADVERSE IMPACTS TO OFF SITE AREAS, AND SHALL BE RESPONSIBLE TO REPAIR RESULTING DAMAGES, IF ANY, AT NO COST TO OWNER.

11. CONTRACTOR IS RESPONSIBLE FOR DEVELOPING A DETAILED TRAFFIC CONTROL PLAN AND MAINTAINING VEHICULAR AND PEDESTRIAN TRAFFIC IN ACCORDANCE WITH THE TRAFFIC CONTROL NOTES IN THESE PLANS, AND IN ACCORDANCE WITH SECTION 641 FOR TRAFFIC CONTROL AS DEFINED IN THE VERMONT AGENCY OF TRANSPORTATION STANDARD SPECIFICATIONS FOR CONSTRUCTION BOOK, DATED 2011 AND THE LATEST VERSION OF THE MUTCD.

12. ALL EXISTING CURB WITHIN THE PROJECT LIMITS SHALL BE REMOVED AND REPLACED AS SHOWN IN PLANS. GRANITE CURB SHALL BE SALVAGED TO THE CITY. CONCRETE CURB SHALL BE DISPOSED BY THE CONTRACTOR.

TYPICAL SECTIONS

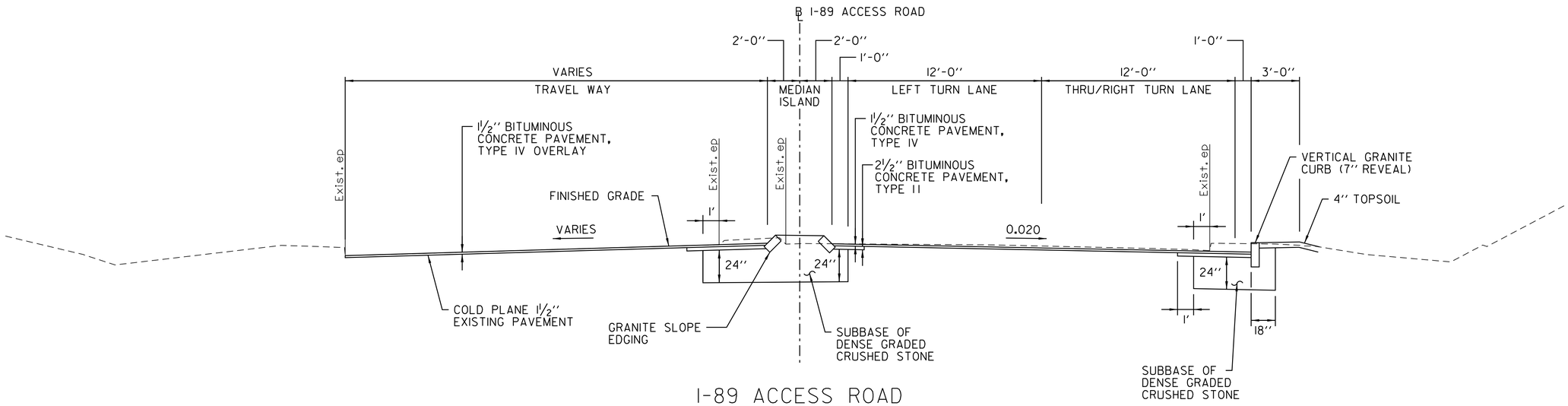

I-89 ACCESS ROAD

NORMAL SECTION
NOT TO SCALE

NOTES

1. AT ALL DRIVES CONSTRUCT SPECIAL PROVISION (PORTLAND CEMENT REINF. CONCRETE SIDEWALK, 8 INCH) OVER 12" SUBBASE OF DENSE GRADED CRUSHED STONE.
2. INSTALL 2-FOOT LONG #5 SMOOTH REINFORCING BARS, GREASED, SPACED 2-FEET APART AT ALL CONCRETE SIDEWALK CONSTRUCTION JOINTS. BARS SHALL BE SET MID-DEPTH OF CONCRETE SIDEWALK.
3. STEEL REINFORCING FOR CONCRETE SIDEWALK SHALL BE INCLUDED IN THE UNIT PRICE BID FOR THE APPROPRIATE SPECIAL PROVISION (PORTLAND CEMENT REINFORCED CONCRETE SIDEWALK) ITEMS.
4. SIDEWALK RAMP DETECTABLE WARNING SURFACES SHALL BE TRUNCATED DOME DETECTABLE WARNING CAST IRON PLATES FROM THE VTRANS APPROVED PRODUCTS LIST.
5. SAWCUT OF EXISTING PAVEMENT, CONCRETE BASE, OR SIDEWALK SHALL BE INCIDENTAL TO THE RELATED ITEMS (TYP) AND NO SEPARATE PAYMENT WILL BE MADE.
6. BITUMINOUS TACK COAT (ITEM 404.65) SHALL BE PLACED ON ALL ADJACENT SURFACES (BOTH HORIZONTAL AND VERTICAL) PRIOR TO PLACEMENT OF SUBSEQUENT BITUMIONOUS PAVEMENT COURSES.

PROJECT NAME: ST. ALBANS	
PROJECT NUMBER: HPP 8000(17)	
FILE NAME: 57414_TYP.dgn	PLOT DATE: 3/4/2016
PROJECT LEADER: M.A. COLGAN	DRAWN BY: DMP / WAD
DESIGNED BY: D.M. PECK	CHECKED BY: G.L. BAKOS
TYPICAL SECTION (SHEET 1 OF 8)	SHEET 6 OF 230

VHB 57414.00

TYPICAL SECTIONS

MATERIAL TOLERANCES	
MATERIAL ITEM	THICKNESS TOLERANCE
PAVEMENT (FULL DEPTH)	± 1/4" (TOTAL THICKNESS)
SUBBASE	1/2"
SAND BORROW	1"

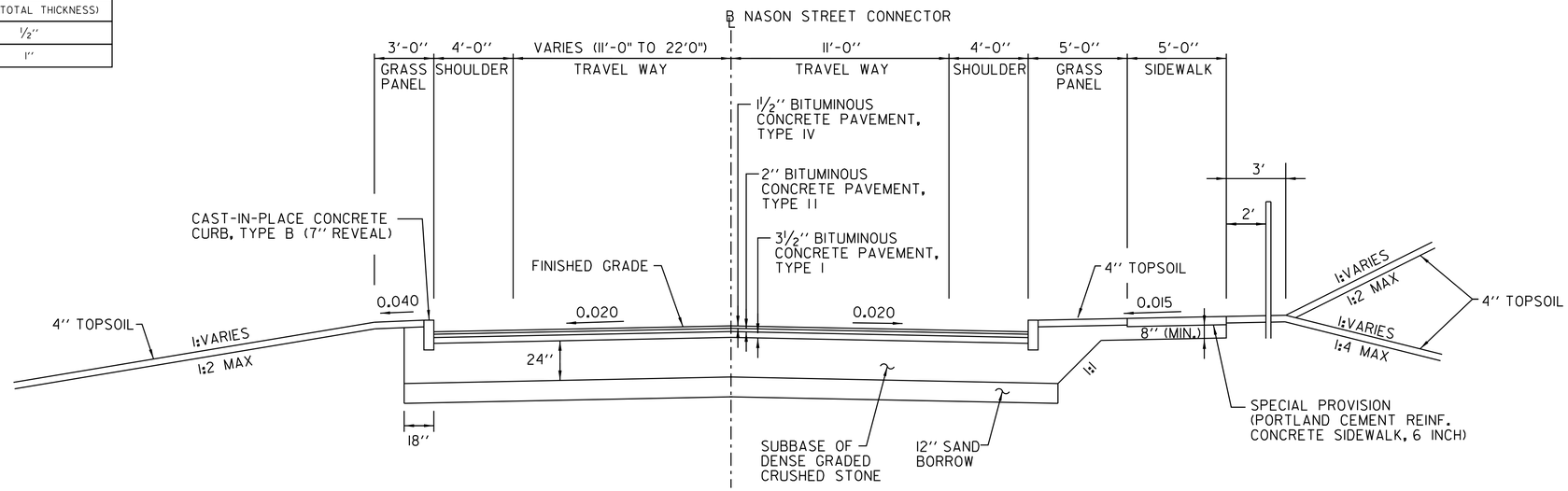

NASON STREET CONNECTOR

NORMAL SECTION
NOT TO SCALE

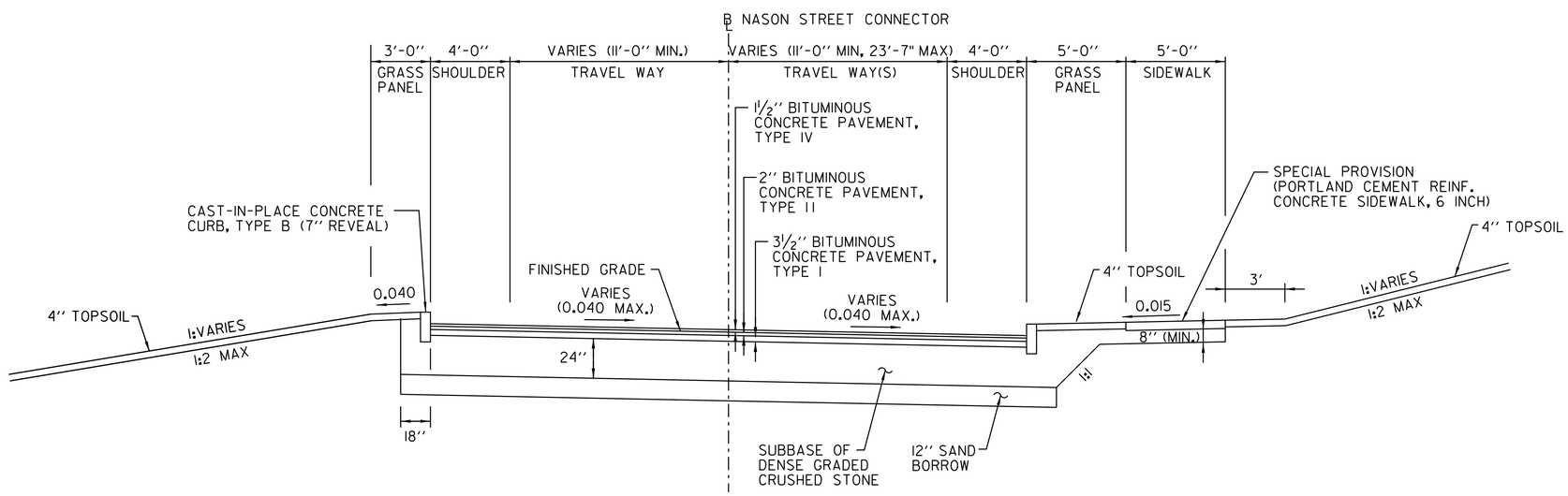

NASON STREET CONNECTOR

SUPERELEVATED SECTION
NOT TO SCALE

PROJECT NAME: ST. ALBANS	
PROJECT NUMBER: HPP 8000(17)	
FILE NAME: 57414_TYP.dgn	PLOT DATE: 3/4/2016
PROJECT LEADER: M.A. COLGAN	DRAWN BY: DMP / WAD
DESIGNED BY: D.M. PECK	CHECKED BY: G.L. BAKOS
TYPICAL SECTION (SHEET 2 OF 8)	SHEET 7 OF 230

TYPICAL SECTIONS

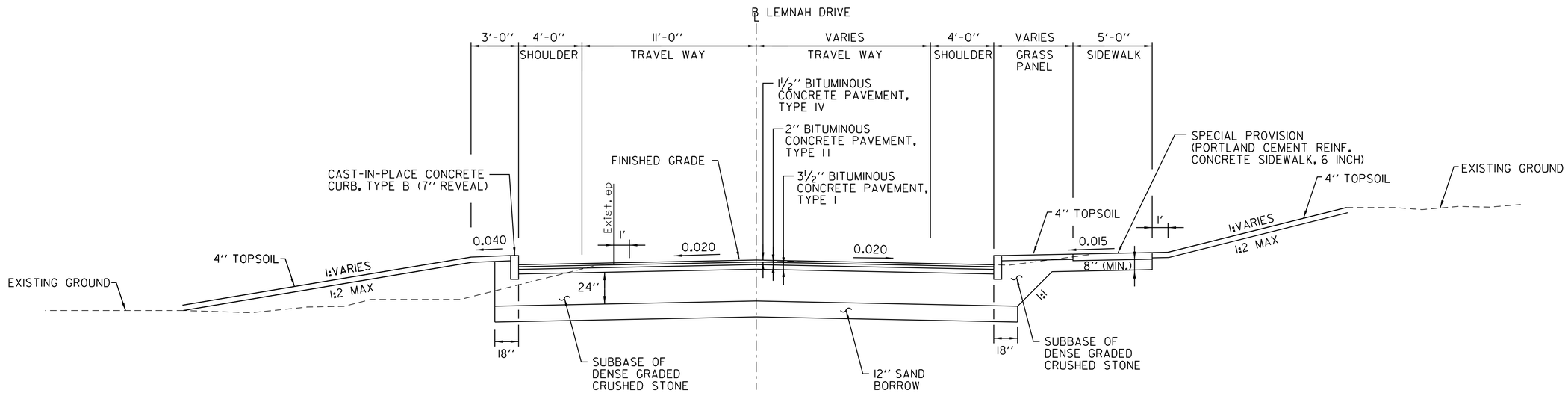

LEMNAH DRIVE & ALLEN STREET

(STA 302+50 - 315+44)
(STA 403+00 - 408+50)
NOT TO SCALE

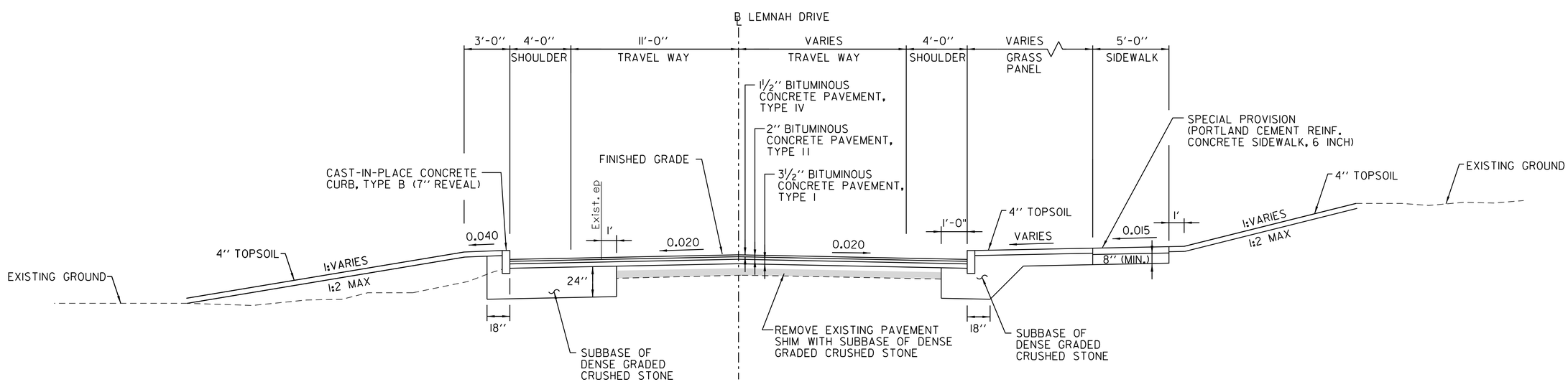

LEMNAH DRIVE

(STA 300+00 - 302+50)
NOT TO SCALE

PROJECT NAME: ST. ALBANS	
PROJECT NUMBER: HPP 8000(17)	
FILE NAME: 57414_TYP.dgn	PLOT DATE: 3/4/2016
PROJECT LEADER: M.A. COLGAN	DRAWN BY: DMP / WAD
DESIGNED BY: D.M. PECK	CHECKED BY: G.L. BAKOS
TYPICAL SECTION (SHEET 3 OF 8)	SHEET 8 OF 230

VHB 57414.00

TYPICAL SECTIONS

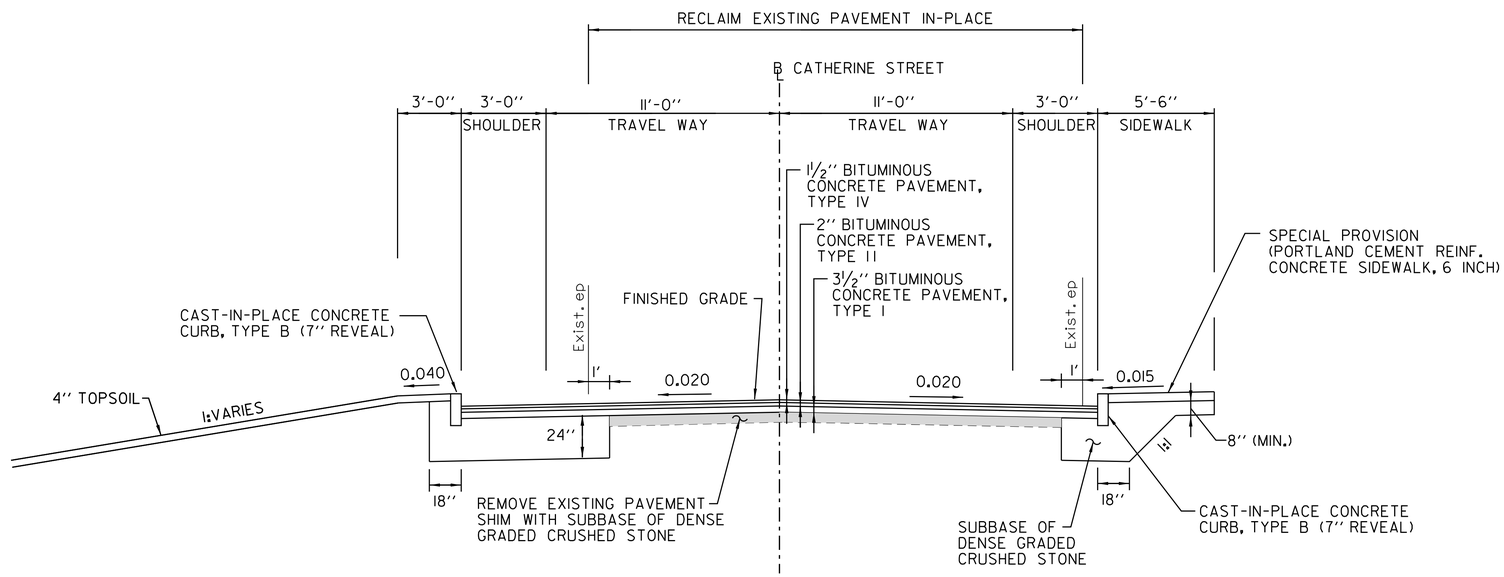

CATHERINE STREET

(STA 408+30 - 413+95)
NOT TO SCALE

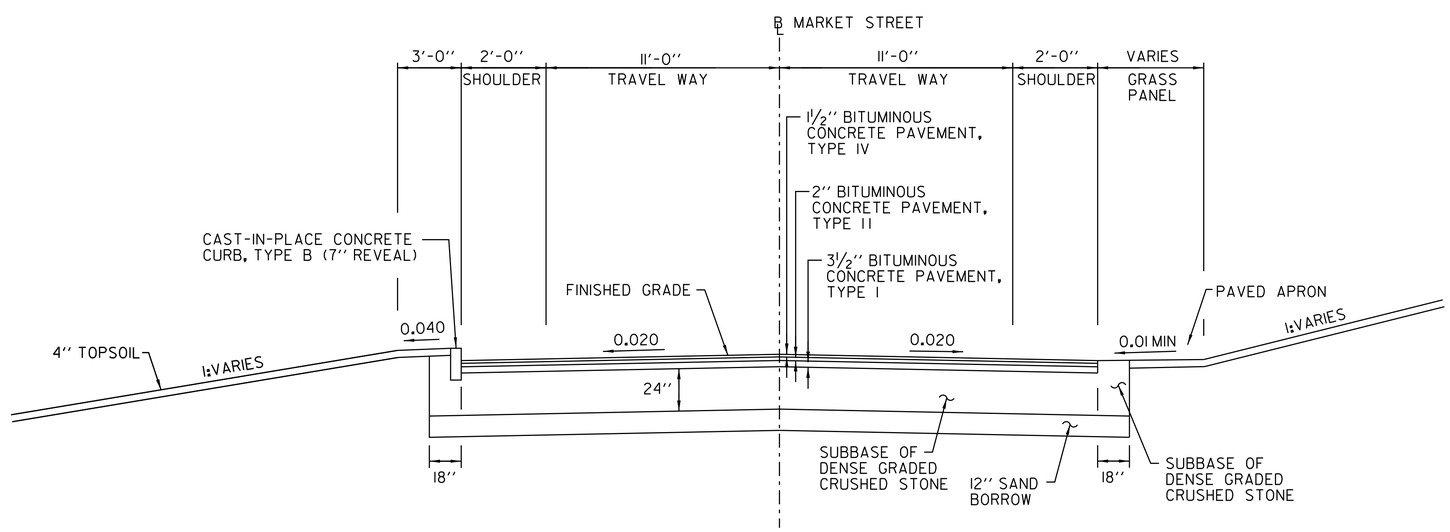

MARKET STREET

NOT TO SCALE

PROJECT NAME: ST. ALBANS	
PROJECT NUMBER: HPP 8000(17)	
FILE NAME: 57414_TYP.dgn	PLOT DATE: 3/4/2016
PROJECT LEADER: M.A. COLGAN	DRAWN BY: DMP / WAD
DESIGNED BY: D.M. PECK	CHECKED BY: G.L. BAKOS
TYPICAL SECTION (SHEET 4 OF 8)	SHEET 9 OF 230

VHB 57414.00

TYPICAL SECTIONS

MATERIAL TOLERANCE	
PAVEMENT	= 1/4"
SUBBASE	= 1"
SAND BORROW	= 1"

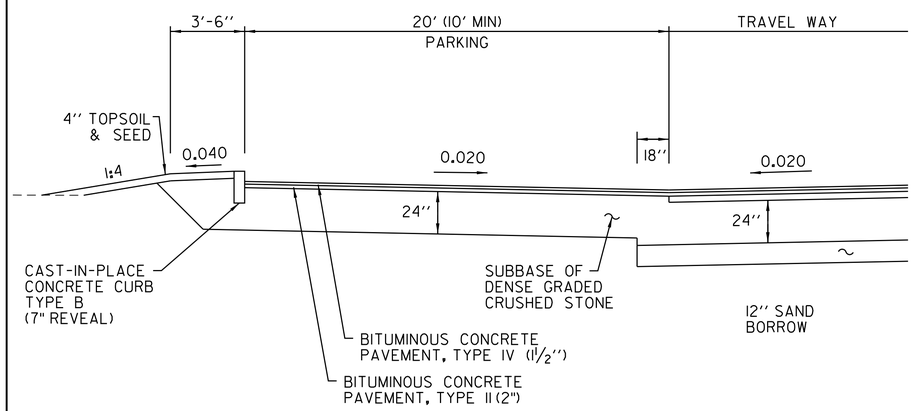

MARKET STREET (DETAIL)

NOT TO SCALE
STA 502+65 to 504+58

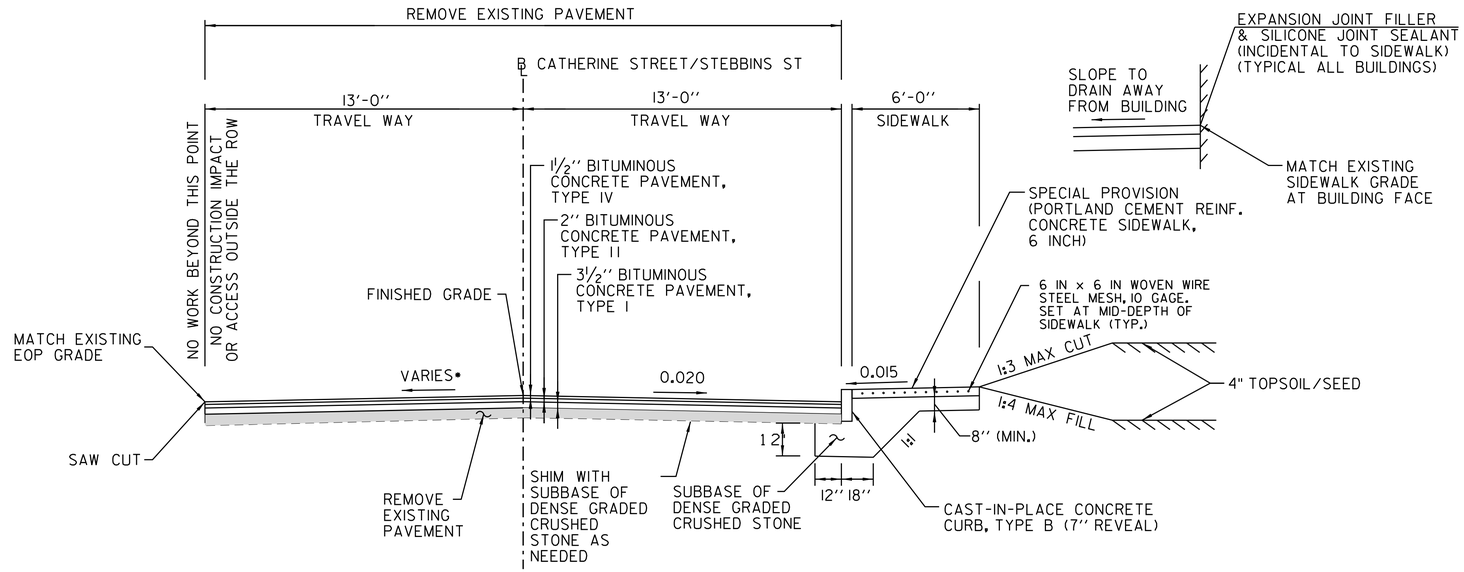

CATHERINE STREET

NOT TO SCALE
STA 200+80 to 205+30

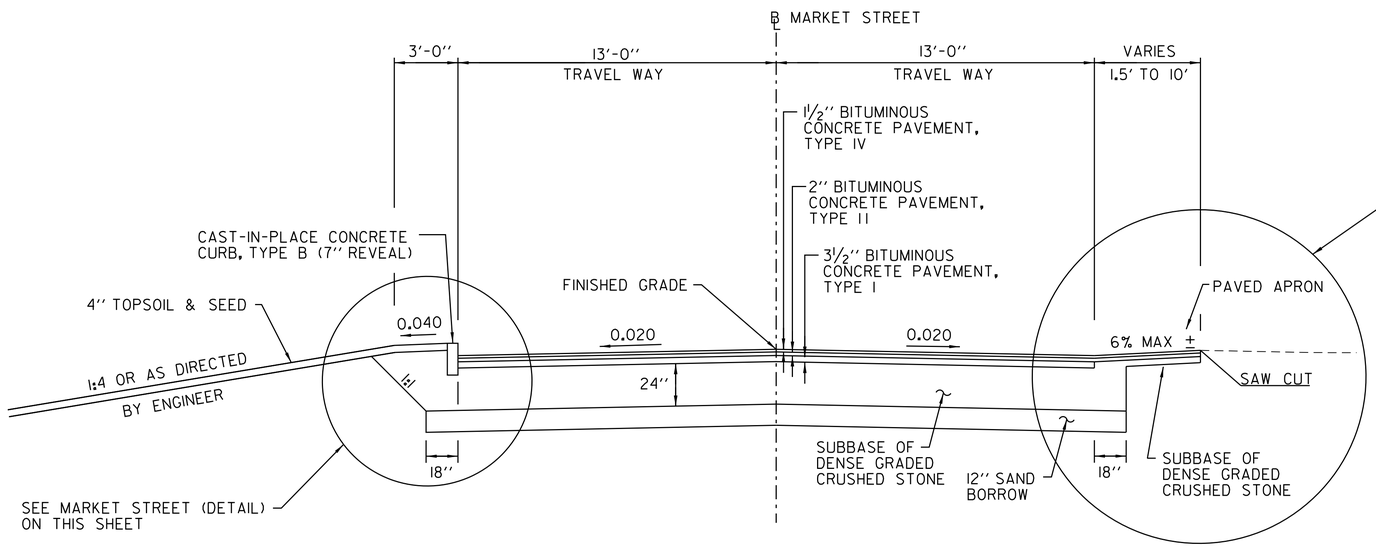

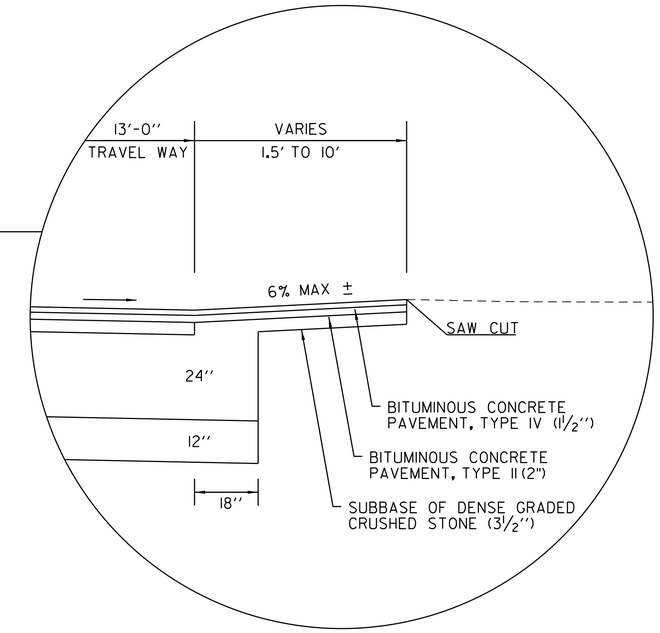

MARKET STREET

NOT TO SCALE
STA 501+85 to 507+04

•SLOPE VARIES TO MATCH EXISTING EOP ELEVATION.
CONTRACTOR TO VERIFY EOP GRADES FLOW TO DRAINAGE STRUCTURES
MAX. 4% CROSS SLOPE

PROJECT NAME: ST. ALBANS	
PROJECT NUMBER: HPP 8000(17)	
FILE NAME: 57414_TYP.dgn	PLOT DATE: 3/4/2016
PROJECT LEADER: M.A. COLGAN	DRAWN BY: DMP / WAD
DESIGNED BY: D.M. PECK	CHECKED BY: G.L. BAKOS
TYPICAL SECTION (SHEET 5 OF 8)	SHEET 10 OF 230

vhb

TYPICAL SECTIONS

MATERIAL TOLERANCE	
PAVEMENT	= 1/4"
SUBBASE	= 1"
SAND BORROW	= 1"

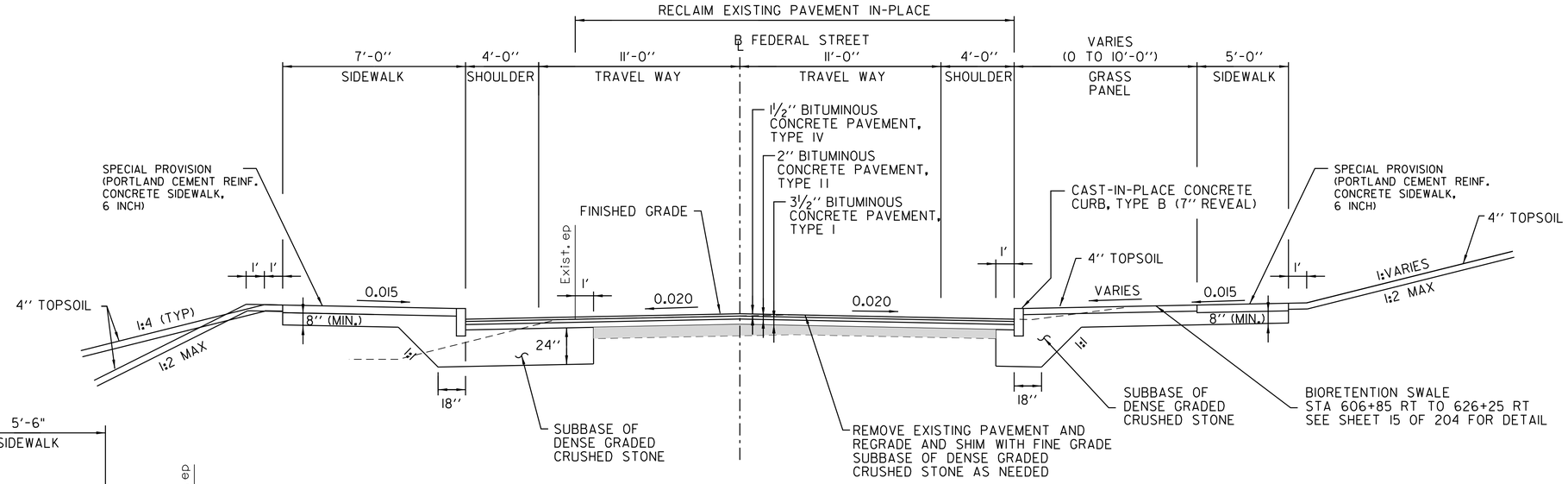

FEDERAL STREET
(STA 608+00 - 632+00)
NOT TO SCALE

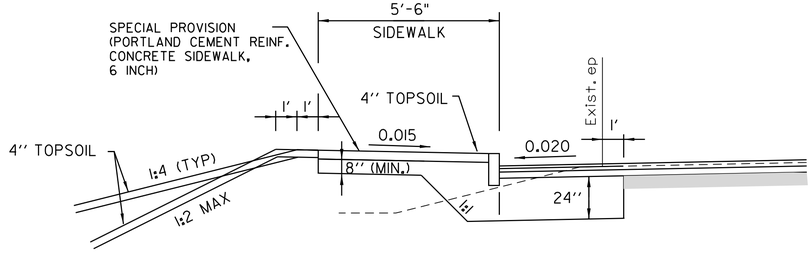

FEDERAL STREET
(STA 622+00 - 631+75)
NOT TO SCALE

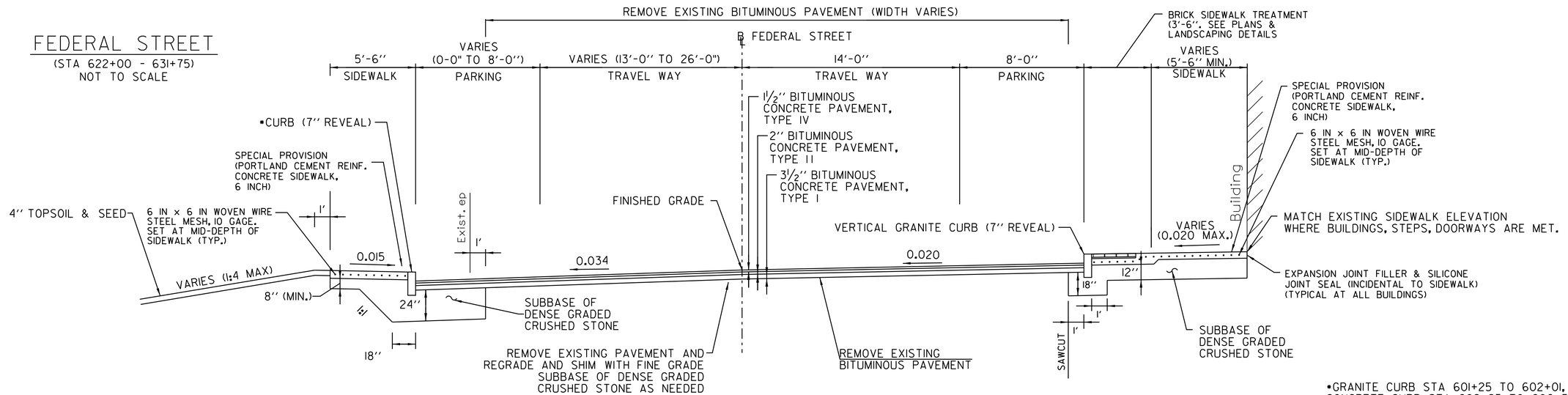

FEDERAL STREET
(STA 600+00 - 606+75)
NOT TO SCALE

•GRANITE CURB STA 601+25 TO 602+01, LT
CONCRETE CURB STA 602+25 TO 606+50

PROJECT NAME: ST. ALBANS	
PROJECT NUMBER: HPP 8000(17)	
FILE NAME: 57414_TYP.dgn	PLOT DATE: 3/4/2016
PROJECT LEADER: M.A. COLGAN	DRAWN BY: DMP / WAD
DESIGNED BY: D.M. PECK	CHECKED BY: G.L. BAKOS
TYPICAL SECTION (SHEET 6 OF 8)	SHEET 11 OF 230

VHB 57414.00

TYPICAL SECTIONS

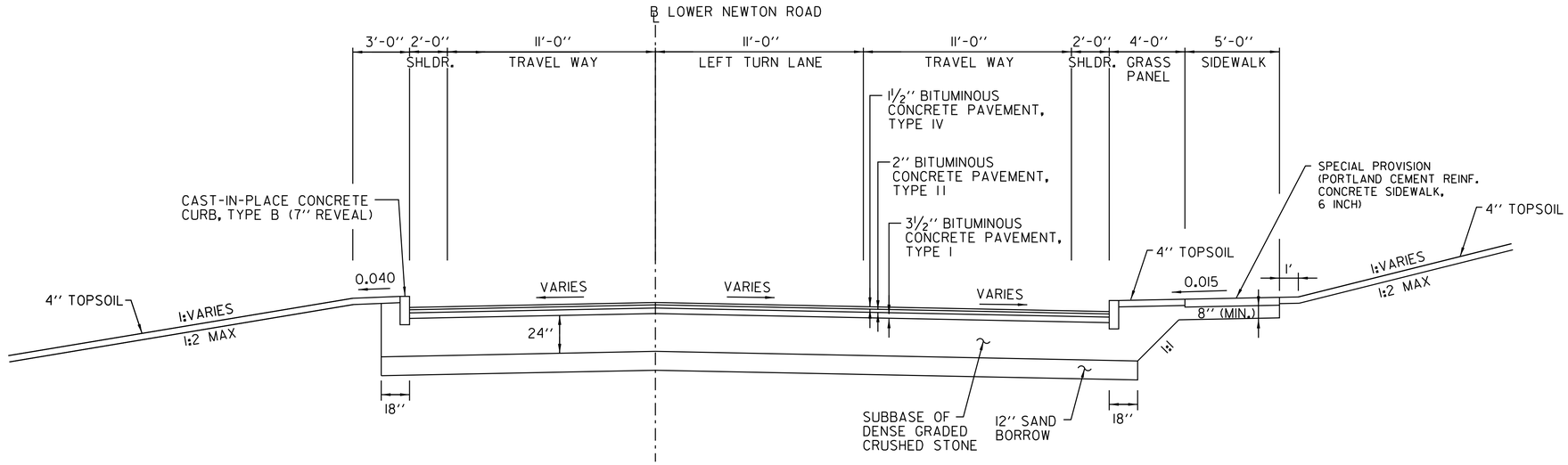

LOWER NEWTON ROAD FULL DEPTH RECONSTRUCTION

(STA 806+50 - 809+34)
NOT TO SCALE

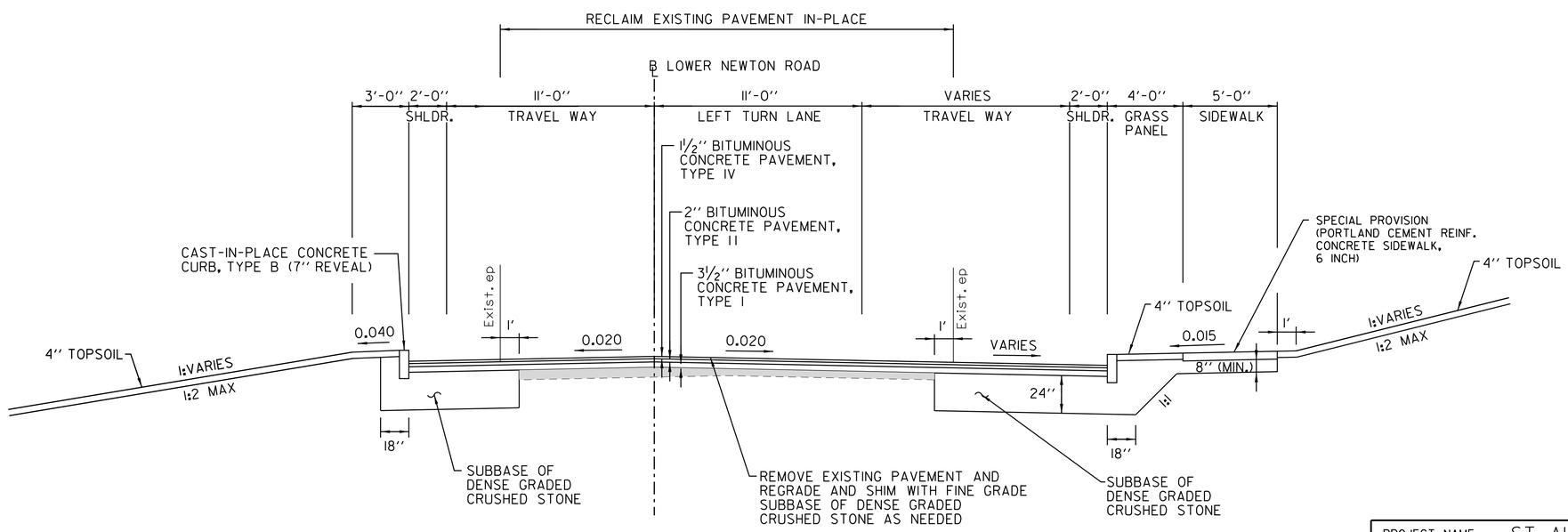

LOWER NEWTON ROAD REHABILIATION & WIDENING

(STA 801+50 - 506+50)
NOT TO SCALE

PROJECT NAME: ST. ALBANS	
PROJECT NUMBER: HPP 8000(17)	
FILE NAME: 57414_TYP.dgn	PLOT DATE: 3/4/2016
PROJECT LEADER: M.A. COLGAN	DRAWN BY: DMP / WAD
DESIGNED BY: D.M. PECK	CHECKED BY: G.L. BAKOS
TYPICAL SECTION (SHEET 7 OF 8)	SHEET 12 OF 230

VHB 57414.00

TYPICAL SECTIONS

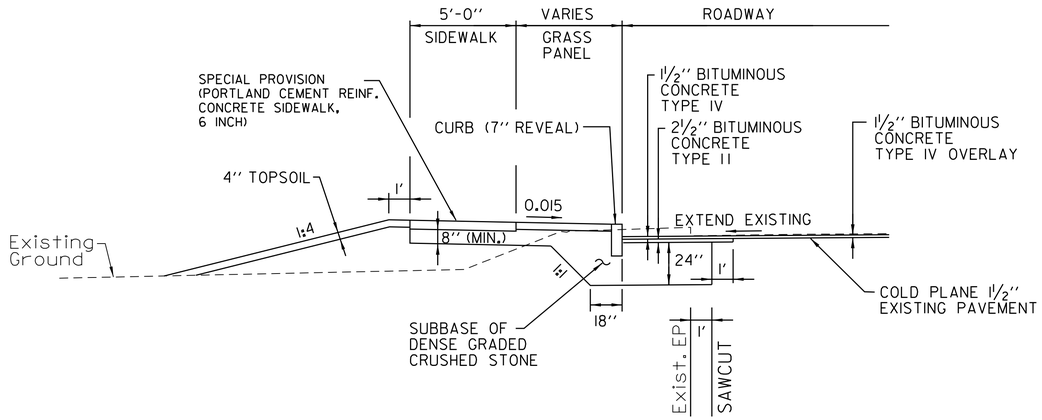

ROAD WIDENING - SIDEWALK

NASON STREET
LOWER WELDEN STREET
LAKE STREET

NOT TO SCALE

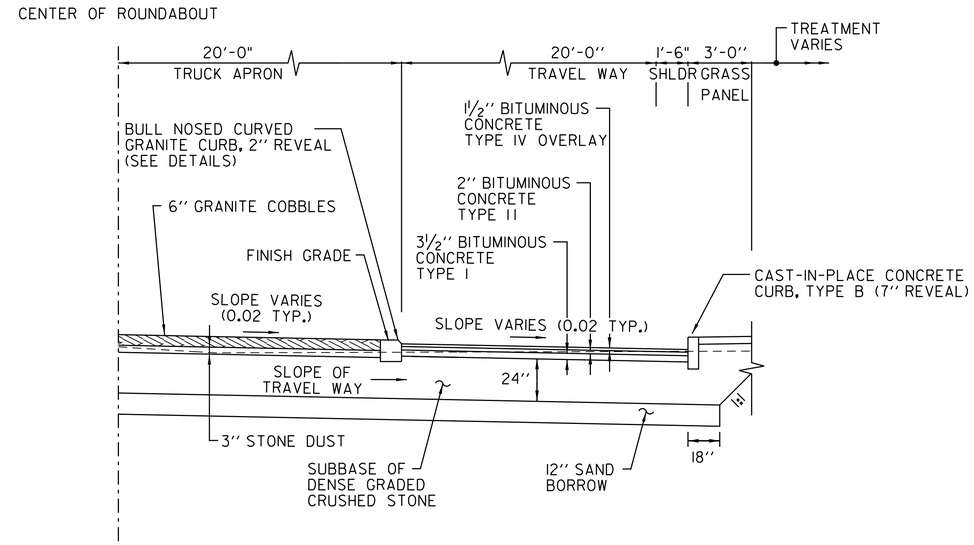

ROUNDABOUT

NOT TO SCALE

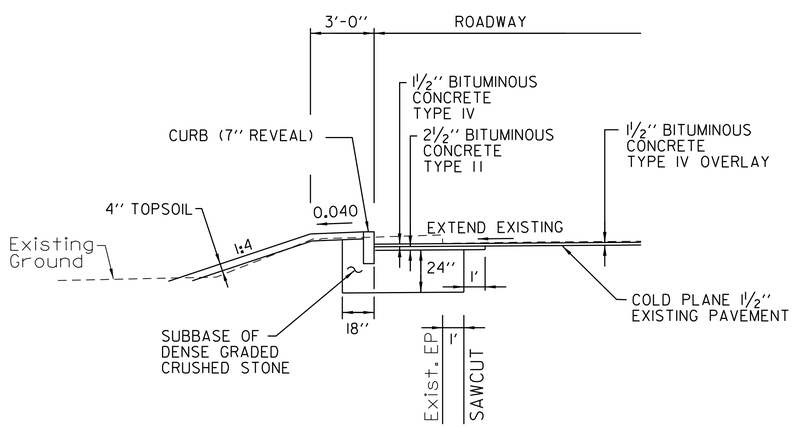

ROAD WIDENING - NO SIDEWALK

SOUTH MAIN STREET
NORTH MAIN STREET
NASON STREET
LOWER WELDEN STREET
LAKE STREET

NOT TO SCALE

PROJECT NAME: ST. ALBANS	
PROJECT NUMBER: HPP 8000(17)	
FILE NAME: 57414_TYP.dgn	PLOT DATE: 3/4/2016
PROJECT LEADER: M.A. COLGAN	DRAWN BY: DMP / WAD
DESIGNED BY: D.M. PECK	CHECKED BY: G.L. BAKOS
TYPICAL SECTION (SHEET 8 OF 8)	SHEET 13 OF 230

VHB 57414.00

CONSTRUCTION DETAILS

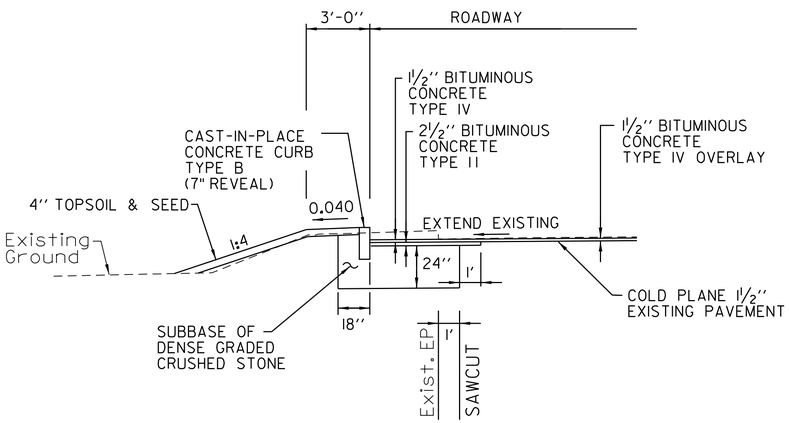

ROAD WIDENING - NO SIDEWALK

NOT TO SCALE

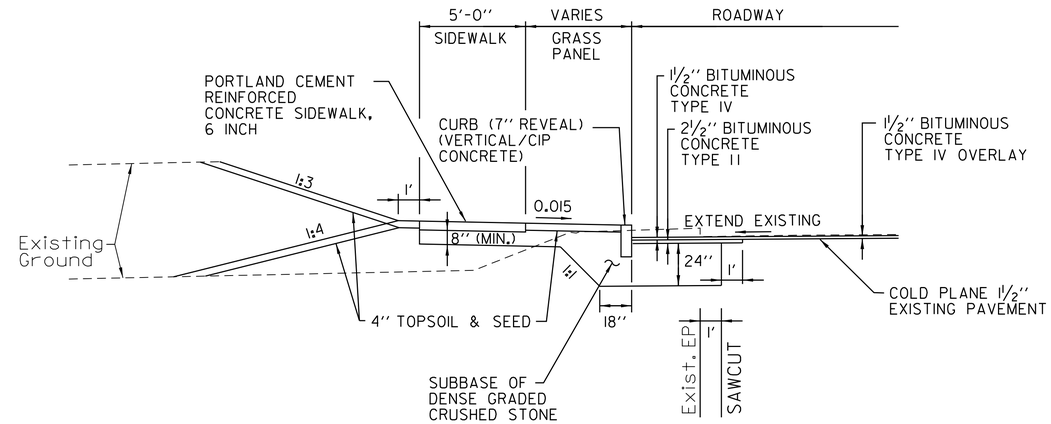

ROAD WIDENING - W/SIDEWALK

NOT TO SCALE

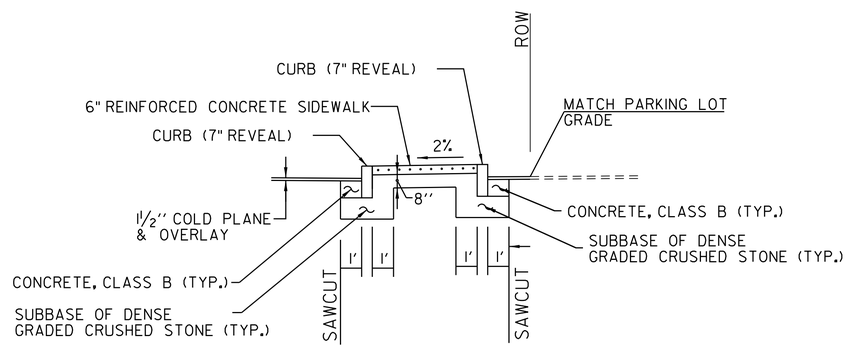

SIDEWALK

NOT TO SCALE

STA 38+84.8, RT TO 39+52, RT

NOT TO SCALE

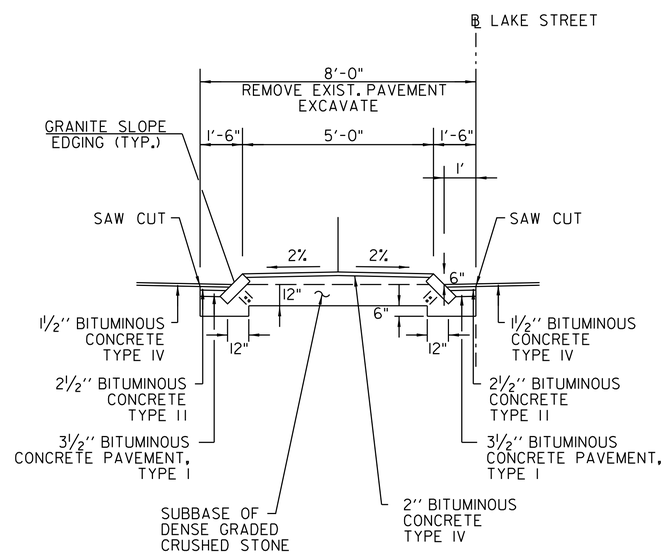

MEDIAN ISLAND

NOT TO SCALE

LAKE STREET (STA 38+29.5, RT TO 38+59.8, RT)

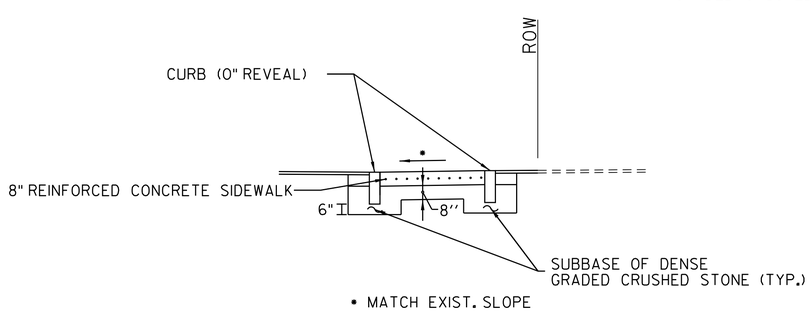

FLUSH CONCRETE SIDEWALK

NOT TO SCALE

STA 38+68.2, RT TO 38+84.8, RT

PROJECT NAME: ST. ALBANS	
PROJECT NUMBER: HPP 8000(17)	
FILE NAME: 57414_BDR_DET.dgn	PLOT DATE: 3/4/2016
PROJECT LEADER: M.A. COLGAN	DRAWN BY: G.A. GOMEZ
DESIGNED BY: D.M. PECK	CHECKED BY: M.J. SERVETAS
CONSTRUCTION DETAILS (SHEET 1 OF 3)	SHEET 14 OF 230

VHB 57414.00

CONSTRUCTION DETAILS

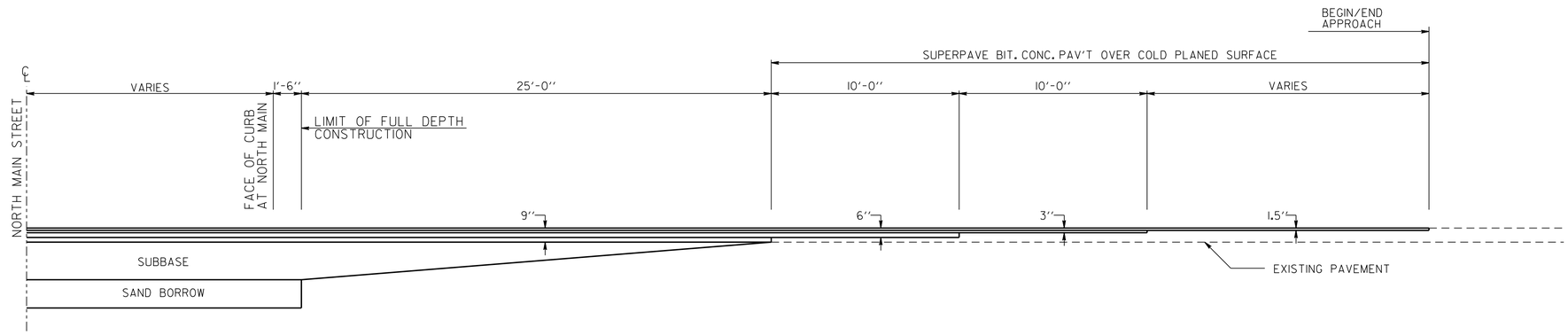

SIDE STREET TRANSITION
N.T.S.

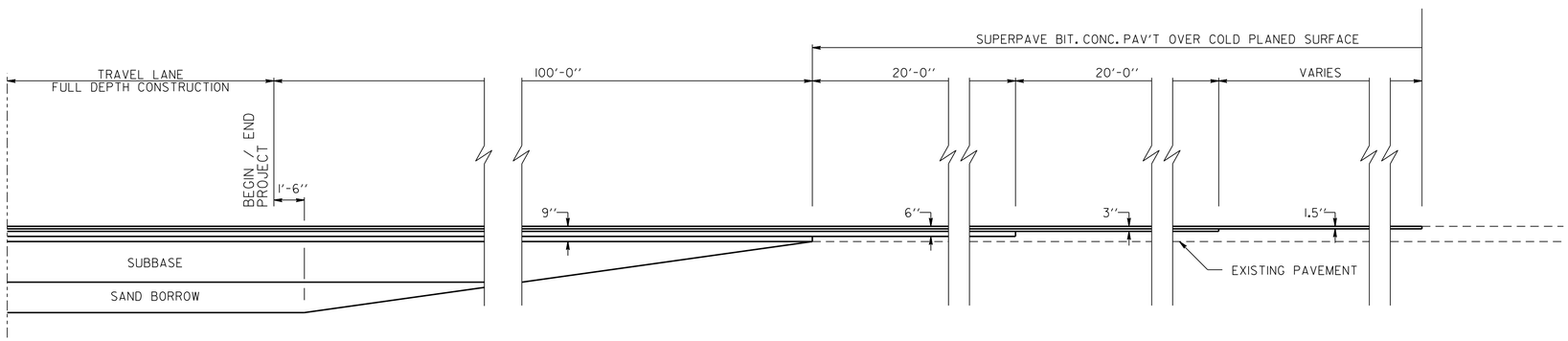

MAIN LINE TRANSITION
N.T.S.

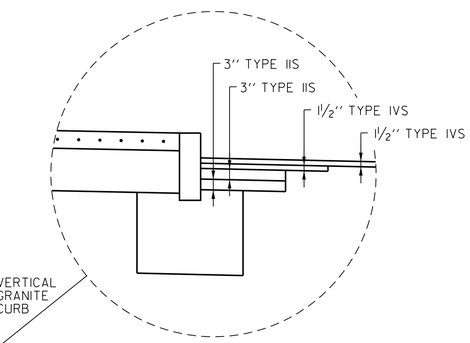

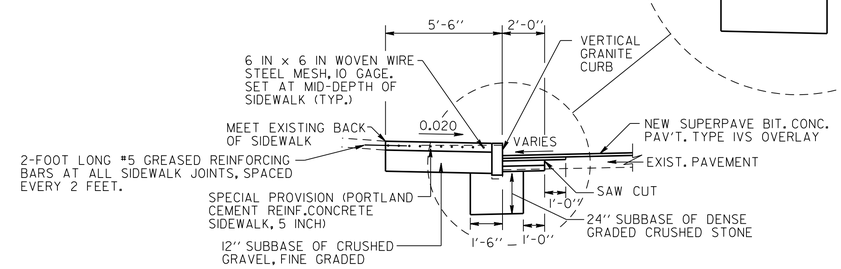

1½" SUPERPAVE BIT. CONC. PAV'T TYPE IVS
1½" SUPERPAVE BIT. CONC. PAV'T TYPE IVS
3" SUPERPAVE BIT. CONC. PAV'T TYPE IIS
3" SUPERPAVE BIT. CONC. PAV'T TYPE IIS
24" SUBBASE OF DENSE GRADED CRUSHED STONE

SIDEWALK CONSTRUCTION AT OVERLAY AREAS
N.T.S.

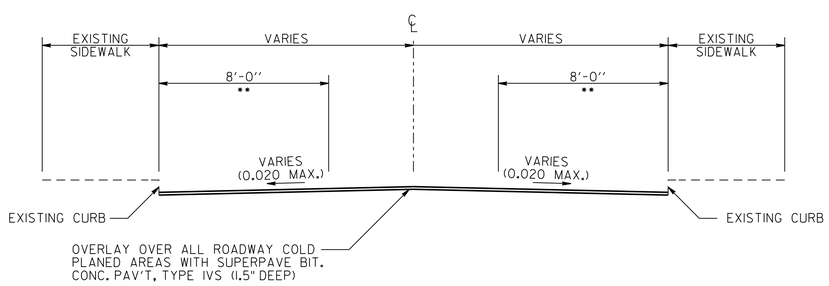

** NOTE:

THE COLD PLANING DEPTH MAY EXCEED 2" AT 8'-0" FROM THE GUTTER LINE IN ORDER TO MAXIMIZE REVEAL AT THE FACE OF EXISTING CURB (7" MAX. REVEAL).

COLD PLANING / RESURFACING
SEE PLANS FOR LOCATIONS
N.T.S.

PROJECT NAME: ST. ALBANS	
PROJECT NUMBER: HPP 8000(17)	
FILE NAME: 57414_BDR_DET.dgn	PLOT DATE: 3/4/2016
PROJECT LEADER: M.A. COLGAN	DRAWN BY: G.A. GOMEZ
DESIGNED BY: D.M. PECK	CHECKED BY: M.J. SERVETAS
CONSTRUCTION DETAILS (SHEET 2 OF 3)	SHEET 15 OF 230

CONSTRUCTION DETAILS

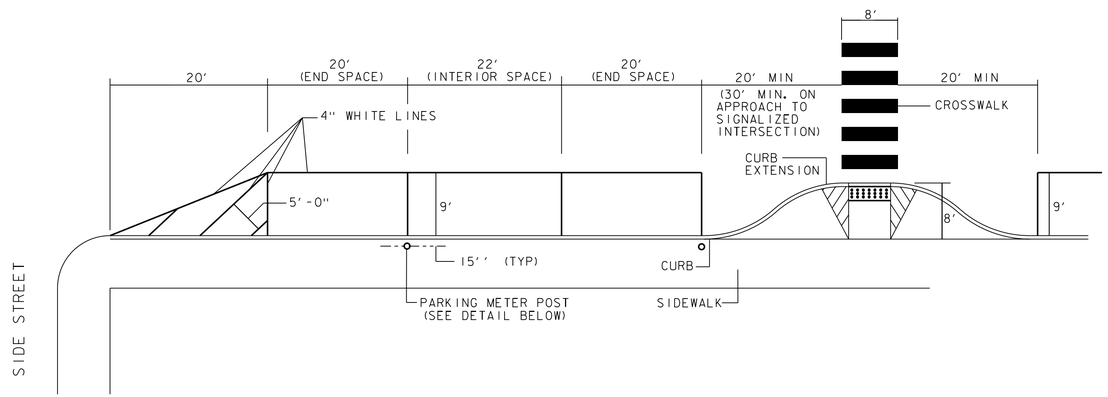

TYPICAL PARKING SPACE AND CROSSWALK LAYOUT

N.T.S

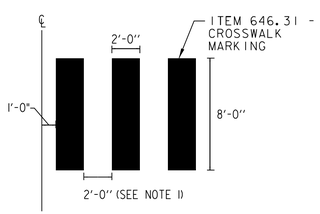

BLOCK STYLE CROSSWALK MARKING

(90 DEGRESS)

N.T.S.

1. ADJUST SPACING (12" TO 24") TO AVOID WHEEL PATHS
2. BLOCKS SHOULD BE INSTALLED PARALLEL TO TRAFFIC FLOW. FOR SKEWED CROSSINGS, OFFSET BLOCKS LATERALLY AS NEEDED.

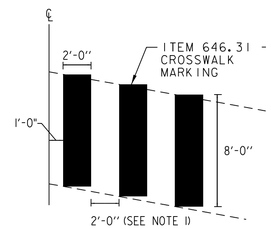

BLOCK STYLE CROSSWALK MARKING

(ON SKEW)

N.T.S.

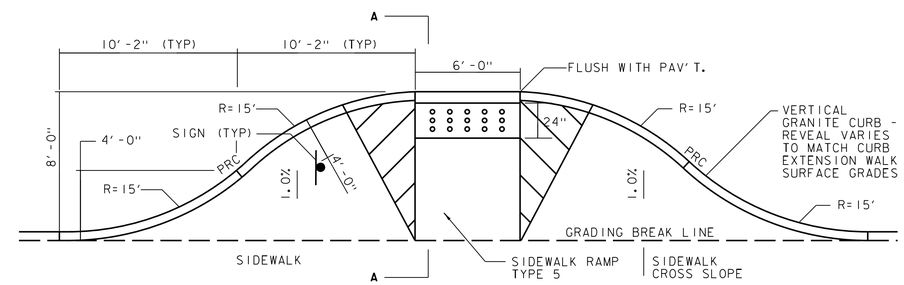

NOTE: REFER TO VT STANDARD SHEETS C-3A & C-3B FOR ADDITIONAL SIDEWALK RAMP CONSTRUCTION DETAILS.

TYPICAL CURB EXTENSION

N.T.S.

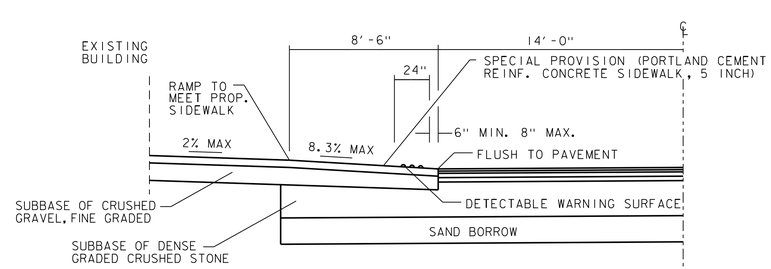

NOTE:

SEE SHEETS 3-5 FOR SIDEWALK AND PAVEMENT STRUCTURES.

CURB EXTENSION SECTION A-A

N.T.S.

PROJECT NAME: ST. ALBANS	
PROJECT NUMBER: HPP 8000(17)	
FILE NAME: 57414_BDR_DET.dgn	PLOT DATE: 3/4/2016
PROJECT LEADER: M.A. COLGAN	DRAWN BY: G.A. GOMEZ
DESIGNED BY: D.M. PECK	CHECKED BY: M.J. SERVETAS
CONSTRUCTION DETAILS (SHEET 3 OF 3)	SHEET 16 OF 230

VHB 57414.00

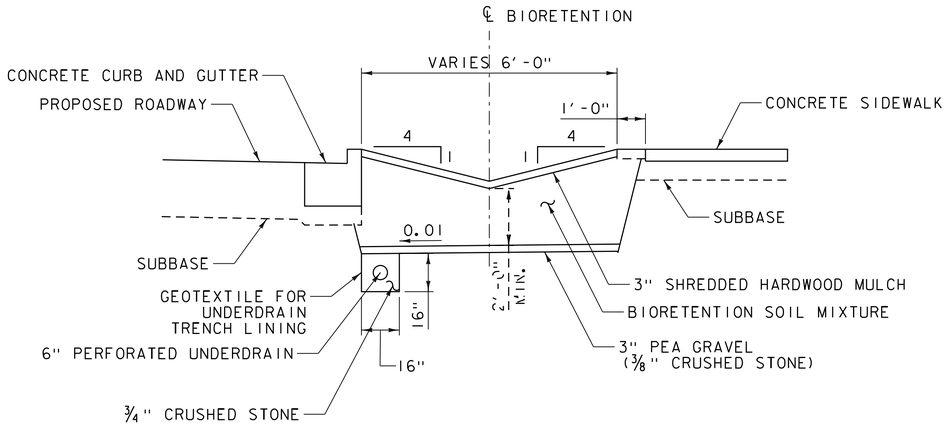

NOTES:

1. PLANTED SWALE WISTH AND PLANTINGS SHOWN ON DRAINAGE LAYOUT PLAN (SEE SHEET).
2. OTHER....

BIORETENTION TYPICAL SECTION

SCALE: 3/8" = 1'-0"

1 1/2" CRUSHED STONE GRADATION TABLE

SIEVE SIZE	% PASSING
2"	100
1 1/2"	95-100
1 1/4"	45-80
1"	35-70
3/4"	0-25
1/2"	0-5
3/8"	0

3/8" CRUSHED STONE GRADATION TABLE

SIEVE SIZE	% PASSING
1/2"	100
3/8"	85-100
No. 4	15-45
No. 8	0-5
No. 40	0

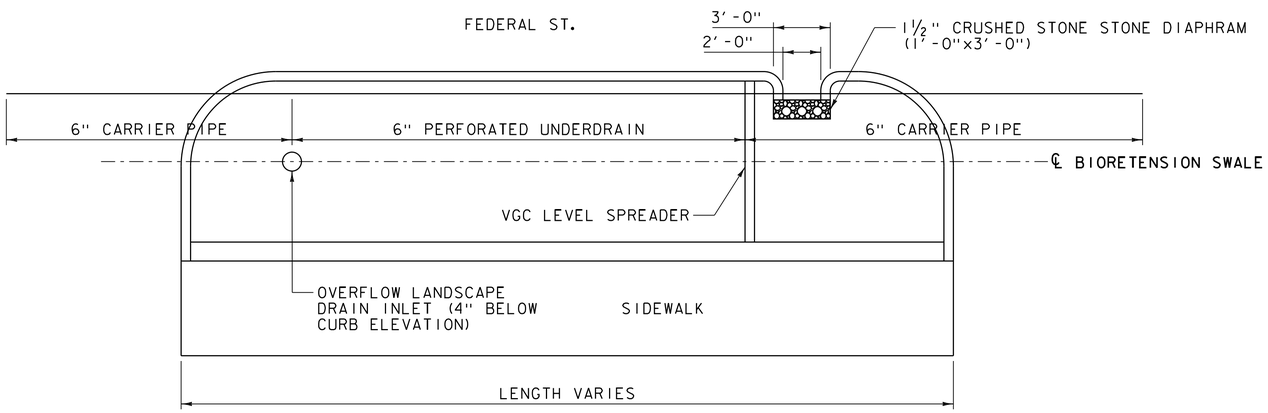

BIORETENTION PLAN VIEW

SCALE: 1/4" = 1'-0"

PROJECT NAME: ST. ALBANS	
PROJECT NUMBER: HPP 8000(17)	
FILE NAME: 57414_BDR_D-DET.dgn	PLOT DATE: 3/4/2016
PROJECT LEADER: M. A. COLGAN	DRAWN BY: VHB
DESIGNED BY: D. M. PECK	CHECKED BY: ------
DRAINAGE DETAILS (1 OF 3)	SHEET 17 OF 230

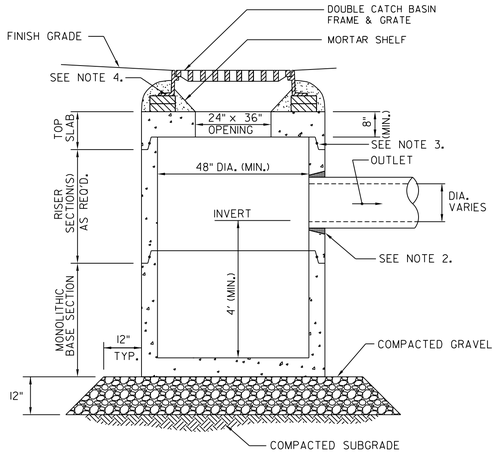

Notes:

1. ALL SECTIONS SHALL BE DESIGNED FOR HS-20 LOADING.
2. PROVIDE OPENINGS FOR PIPES WITH 2" MAX. CLEARANCE TO OUTSIDE OF PIPE. MORTAR ALL PIPE CONNECTIONS.
3. JOINT SEALANT BETWEEN PRECAST SECTIONS SHALL BE BUTYL RUBBER.
4. DOUBLE CATCH BASIN FRAME AND GRATE SHALL BE SET IN FULL MORTAR BED. ADJUST TO GRADE WITH CLAY BRICK AND MORTAR (2 BRICKS TYPICALLY, 5 BRICK COURSES MAXIMUM)

DOUBLE GRATE CATCH BASIN

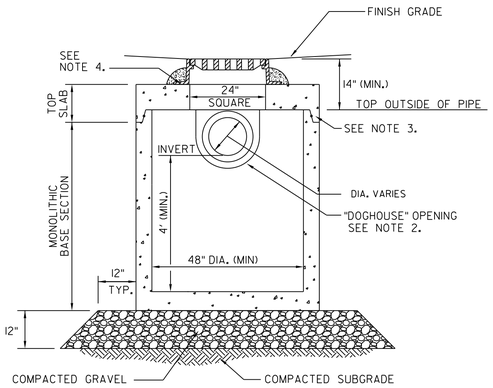

Notes:

1. ALL SECTIONS SHALL BE DESIGNED FOR HS-20 LOADING.
2. PROVIDE DOGHOUSE OPENING FOR PIPES WITH 2" MAX. CLEARANCE TO OUTSIDE OF PIPE. TOP SLAB SHALL NOT REST DIRECTLY ON PIPE. GROUT ALL PIPE CONNECTIONS (NON-SHRINK GROUT).
3. JOINT SEALANT BETWEEN PRECAST SECTIONS SHALL BE PREFORMED BUTYL RUBBER.
4. CATCH BASIN FRAME AND GRATE (4"DEPTH) SHALL BE SET IN FULL MORTAR BED.
5. ADJUST TO FINISH GRADE WITH CLAY BRICK AND MORTAR AS REQUIRED.

CATCH BASIN SHALLOW COVER

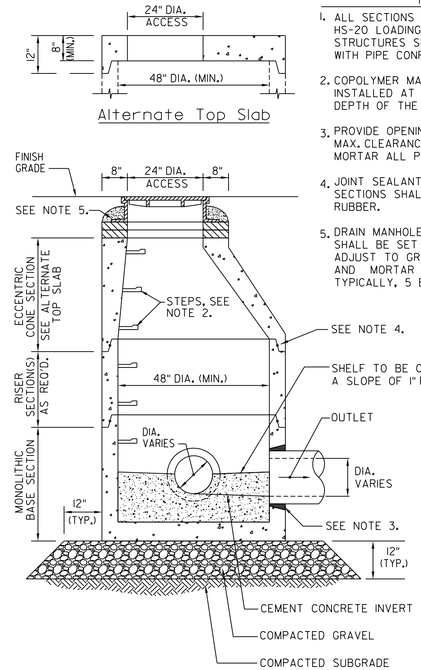

Notes:

1. ALL SECTIONS SHALL BE DESIGNED FOR HS-20 LOADING. DIAMETER OF STRUCTURES SHALL BE COORDINATED WITH PIPE CONFIGURATIONS.
2. COPOLYMER MANHOLE STEPS SHALL BE INSTALLED AT 12" O.C. FOR THE FULL DEPTH OF THE STRUCTURE.
3. PROVIDE OPENINGS FOR PIPES WITH 2" MAX. CLEARANCE TO OUTSIDE OF PIPE. MORTAR ALL PIPE CONNECTIONS.
4. JOINT SEALANT BETWEEN PRECAST SECTIONS SHALL BE PREFORMED BUTYL RUBBER.
5. DRAIN MANHOLE FRAME AND COVER SHALL BE SET IN FULL MORTAR BED. ADJUST TO GRADE WITH CLAY BRICK AND MORTAR (2 BRICK COURSES TYPICALLY, 5 BRICK COURSES MAXIMUM)

DRAIN MANHOLE

FES NO.	X	Y	Z	STONE DIA. (D 50)

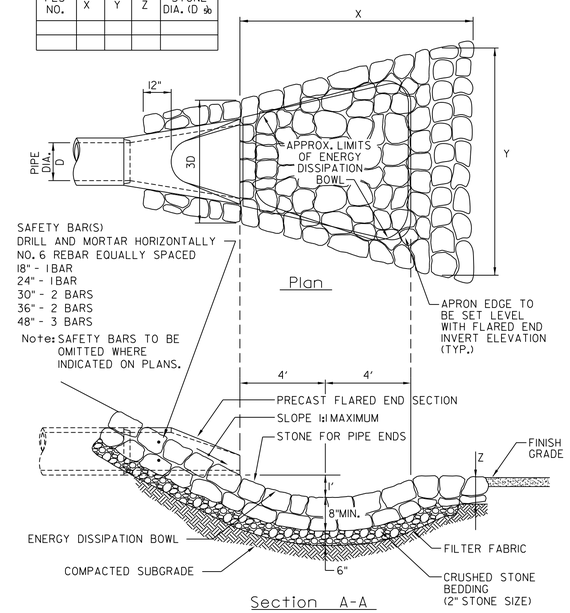

FLARED END SECTION WITH STONE PROTECTION

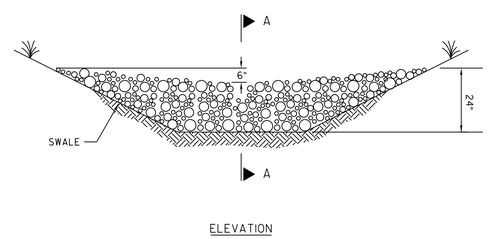

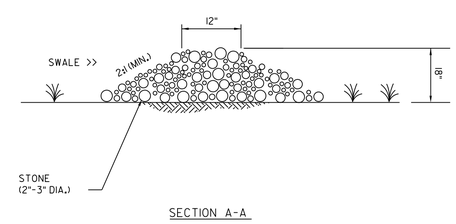

NOTES:

1. STONE CHECKDAM TO BE A PERMANENT STRUCTURE AFTER CONSTRUCTION.

STONE CHECKDAM

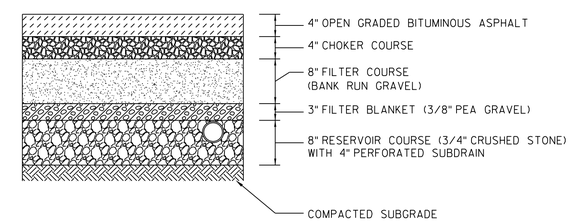

TYPICAL PERMEABLE PAVEMENT SECTION

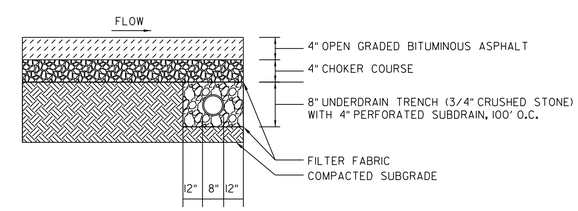

REDUCED PERMEABLE PAVEMENT SECTION WITH UNDERDRAIN TRENCH

PROJECT NAME: ST. ALBANS	
PROJECT NUMBER: HPP 8000(17)	
FILE NAME: 57414_BDR_D-DET.dgn	PLOT DATE: 3/4/2016
PROJECT LEADER: M. A. COLGAN	DRAWN BY: VHB
DESIGNED BY: D. M. PECK	CHECKED BY: ------
DRAINAGE DETAILS (2 OF 3)	SHEET 18 OF 230

DETENTION BASIN NO.	DIAMETER ORIFICE A	INVERT ORIFICE A	DIAMETER ORIFICE B	INVERT ORIFICE B	DIAMETER OUTLET PIPE	INVERT OUTLET PIPE	OVERFLOW WEIR ELEV.	OVERFLOW RIPRAP SWALE DIMENSIONS	OVERFLOW SWALE ELEV.	TOP OF BERM
								W= D=		

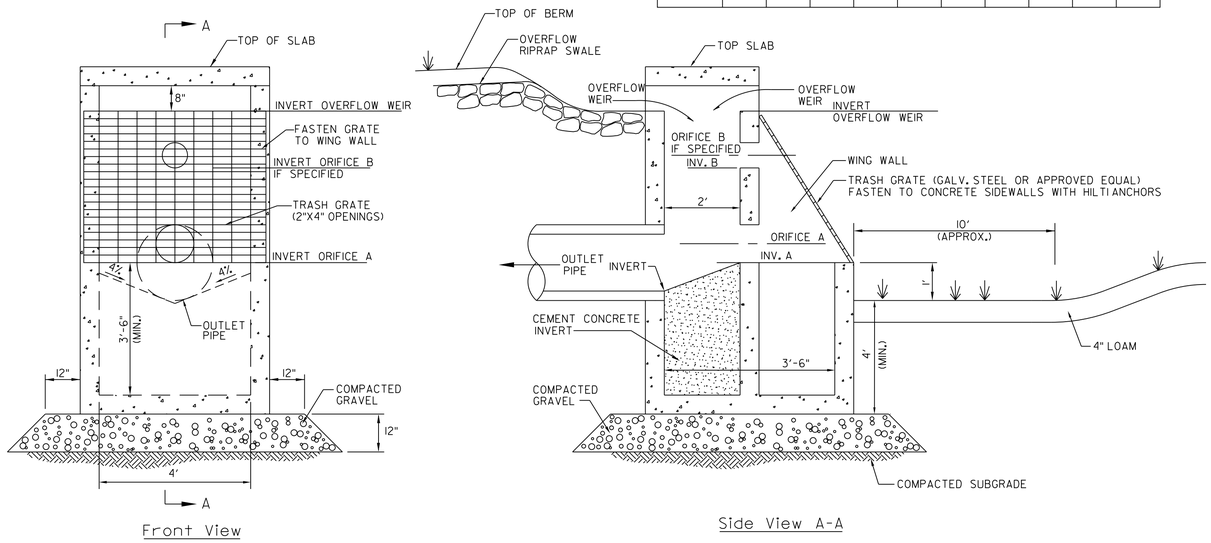

MULTISTAGE OUTLET CONTROL STRUCTURE

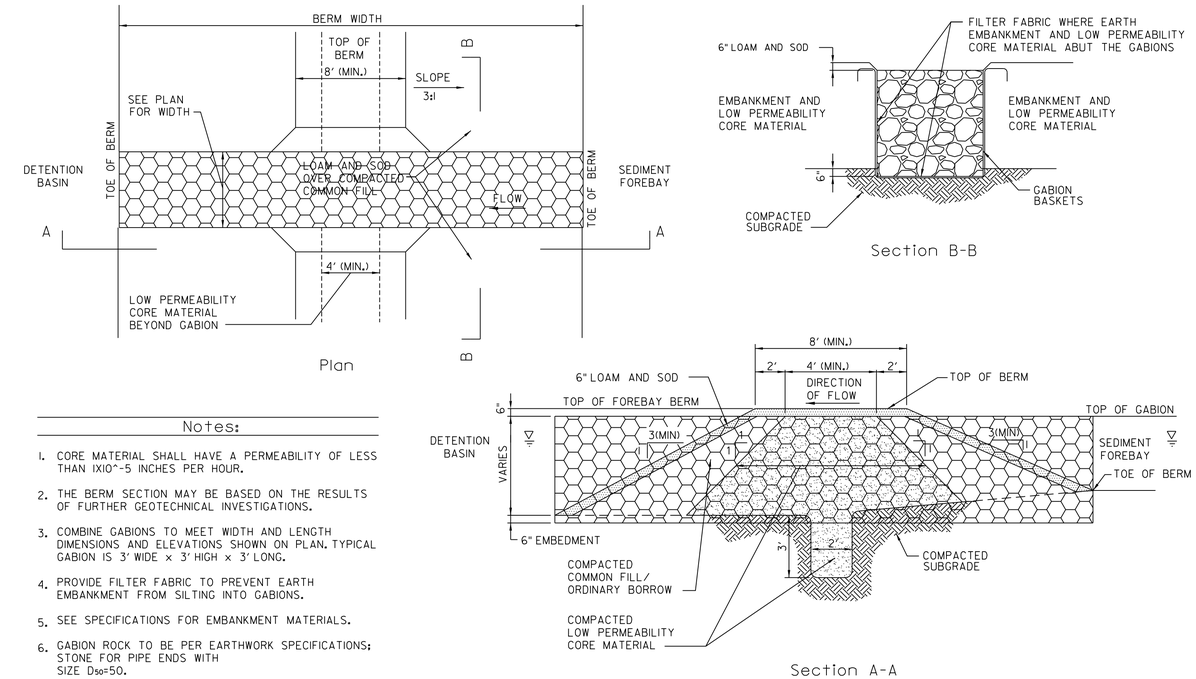

Notes:

1. CORE MATERIAL SHALL HAVE A PERMEABILITY OF LESS THAN IX10^-5 INCHES PER HOUR.
2. THE BERM SECTION MAY BE BASED ON THE RESULTS OF FURTHER GEOTECHNICAL INVESTIGATIONS.
3. COMBINE GABIONS TO MEET WIDTH AND LENGTH DIMENSIONS AND ELEVATIONS SHOWN ON PLAN. TYPICAL GABION IS 3' WIDE x 3' HIGH x 3' LONG.
4. PROVIDE FILTER FABRIC TO PREVENT EARTH EMBANKMENT FROM SILTING INTO GABIONS.
5. SEE SPECIFICATIONS FOR EMBANKMENT MATERIALS.
6. GABION ROCK TO BE PER EARTHWORK SPECIFICATIONS; STONE FOR PIPE ENDS WITH SIZE D_{50}=50.

SEDIMENT FOREBAY BERM

SWALE DESIGNATION	W	D

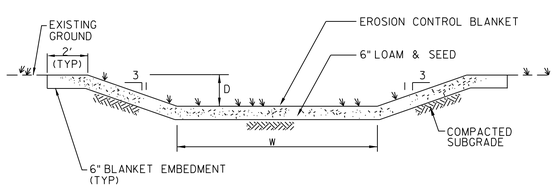

GRASSED SWALE

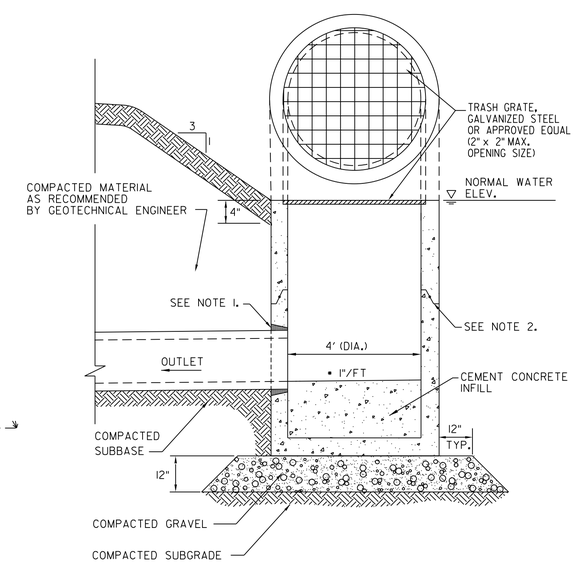

Notes:

1. PROVIDE OPENINGS FOR PIPES WITH 2" MAX. CLEARANCE TO OUTSIDE OF PIPE. MORTAR ALL PIPE CONNECTIONS.
2. JOINT SEALANT BETWEEN PRECAST SECTIONS SHALL BE PREFORMED BUTYL RUBBER.

POND OUTLET CONTROL DETAIL

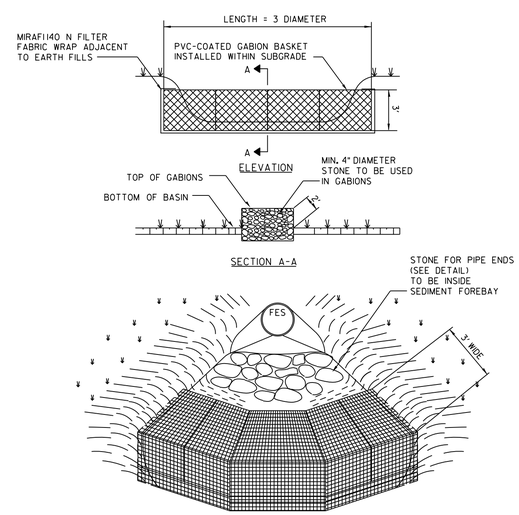

SEE GRADING AND DRAINAGE PLANS FOR VOLUME AND DEPTH INFORMATION

SEDIMENT FOREBAY WITH GABION BAFFLES

PROJECT NAME: ST. ALBANS	
PROJECT NUMBER: HPP 8000(17)	
FILE NAME: 57414_BDR_D-DET.dgn	PLOT DATE: 3/4/2016
PROJECT LEADER: M. A. COLGAN	DRAWN BY: VHB
DESIGNED BY: D. M. PECK	CHECKED BY: ------
DRAINAGE DETAILS (3 OF 3)	SHEET 19 OF 230

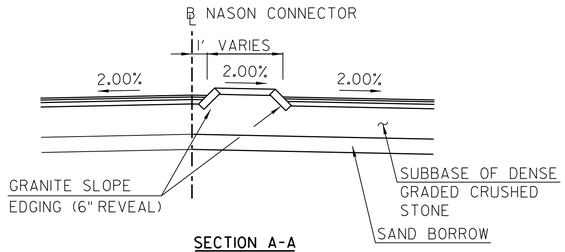

SECTION A-A
N.T.S.

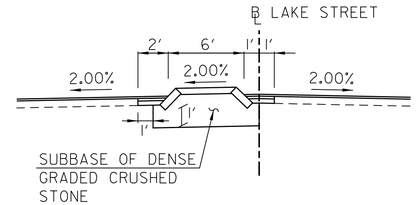

SECTION B-B
N.T.S.

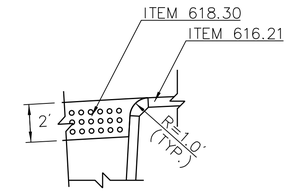

CURB DETAIL "A"
N.T.S.

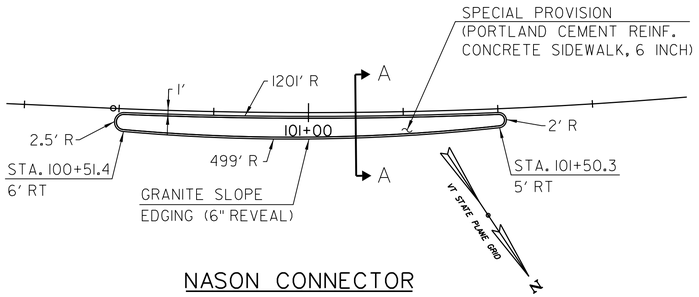

NASON CONNECTOR
N.T.S.

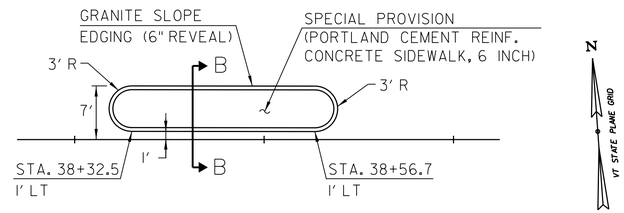

LAKE STREET (VT 36)
N.T.S.

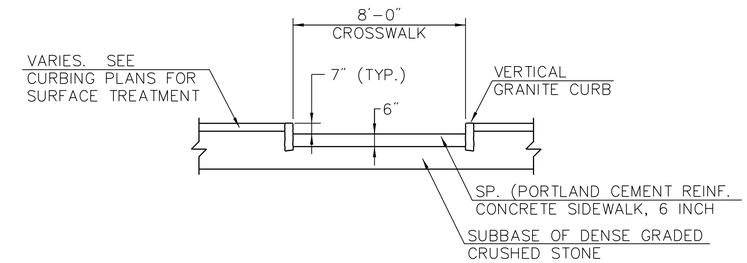

TYPICAL CROSSWALK LONGITUDINAL
SECTION D-D
N.T.S.

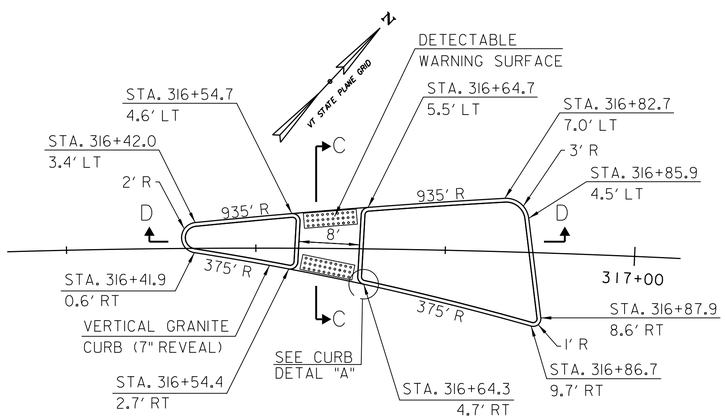

LEMNAH DRIVE
N.T.S.

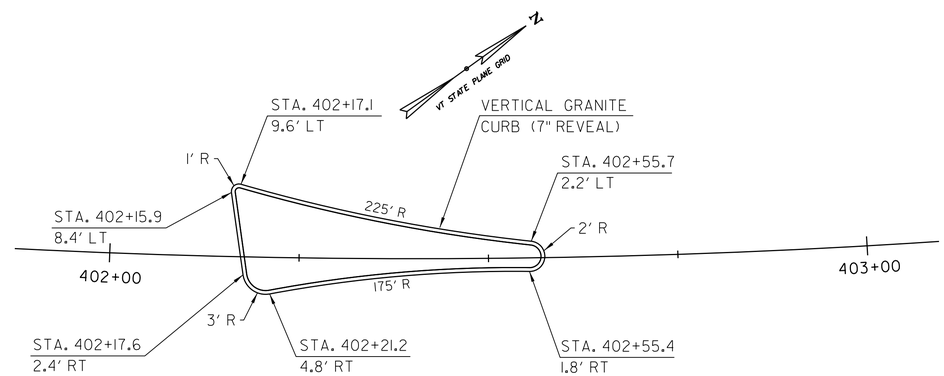

ALLEN STREET
N.T.S.

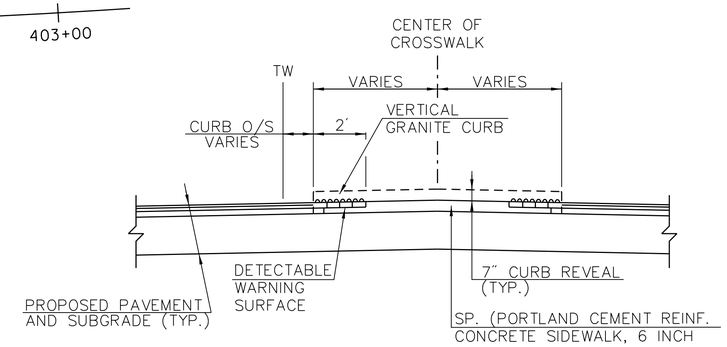

TYPICAL CROSSWALK LONGITUDINAL
SECTION C-C
N.T.S.

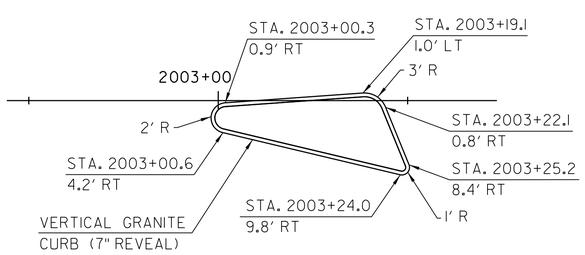

LOWER WELDEN STREET (WEST)
N.T.S.

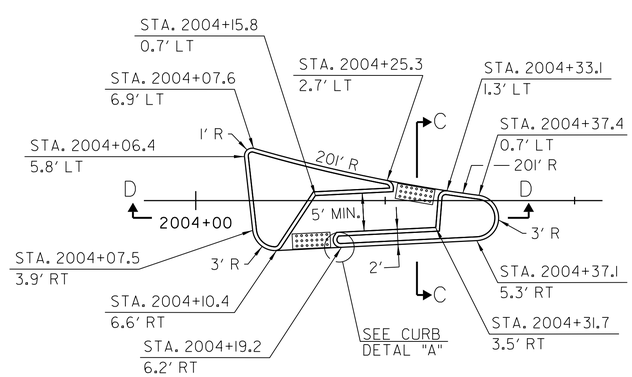

LOWER WELDEN STREET (EAST)
N.T.S.

PROJECT NAME: ST. ALBANS	
PROJECT NUMBER: HPP 8000(17)	
FILE NAME: 57414_RM_DET.dgn	PLOT DATE: 3/4/2016
PROJECT LEADER: J. D. SALADINO	DRAWN BY: DMP / WAD
DESIGNED BY: D.M. PECK	CHECKED BY: G.L. BAKOS
DRAINAGE DETAIL SHEET (3 OF ??)	SHEET 20 OF 230

VHB 57414.00

NASON STREET CONNECTOR

POINT TYPE	STATION	NORTHING	EASTING
POB	100+00.00	839528.0153	1487601.8470
PC	100+48.45	839556.5994	1487562.7234
PI	101+70.84	839628.7966	1487463.9056
PT	102+92.37	839679.5590	1487352.5478
PC	107+20.50	839857.1392	1486962.9888
PI	108+27.17	839901.3852	1486865.9260
PT	108+84.03	839995.3921	1486916.3403
POE	110+56.00	840146.9421	1486997.6139

NASON STREET

POINT TYPE	STATION	NORTHING	EASTING
POB	201+40.00	840252.7268	1486778.0503
POE	205+00.00	840096.4706	1487102.3711

LEMNAH DRIVE

POINT TYPE	STATION	NORTHING	EASTING
POB	300+00.00	840146.9345	1486997.6297
PC	308+63.18	840916.0772	1487389.4163
PI	309+37.33	840982.1474	1487423.0712
PT	310+11.35	841051.2147	1487450.0460
PC	310+75.30	841110.7835	1487473.3111
PI	311+53.68	841183.7847	1487501.8223
PT	312+31.82	841252.4308	1487539.6348
PC	312+89.82	841303.2315	1487567.6175
PI	315+11.94	841497.7856	1487674.7844
PT/POE	317+28.61	841638.2137	1487846.8773

ALLEN STREET TO MARKET STREET

POINT TYPE	STATION	NORTHING	EASTING
POB/PC	401+75.05	841638.2137	1487846.8773
PI	402+91.58	841728.3754	1487920.7057
PT	404+07.16	841832.5747	1487972.8808
PC	407+41.97	842131.9555	1488122.7880
PI	408+24.81	842206.0238	1488159.8758
PRC	409+05.22	842258.6231	1488223.8674
PI	410+06.29	842322.8020	1488301.9466
PT	410+98.93	842422.2688	1488319.8811
POE	415+62.88	842878.8576	1488402.2071

STEBBINS STREET TO MARKET STREET

POINT TYPE	STATION	NORTHING	EASTING
POB	500+00.00	842307.1769	1488402.8695
PC	501+17.33	842327.5573	1488287.3250
PI	502+34.19	842347.8571	1488172.2373
PT	503+02.65	842463.4419	1488189.4834
PC	504+57.33	842616.4364	1488212.3114
PI	505+40.24	842698.4359	1488224.5463
PT	506+23.05	842779.1414	1488243.5259
POE	507+35.28	842888.3894	1488269.2180

FEDERAL STREET

POINT TYPE	STATION	NORTHING	EASTING
POB	600+00.00	842878.8576	1488402.2071
PC	600+48.35	842922.4130	1488423.2082
PI	600+94.75	842964.2007	1488443.3569
PT	601+40.41	843010.1226	1488449.9424
PC	602+99.43	843167.5337	1488472.5160
PI	603+42.28	843209.9500	1488478.5988
PT	603+85.13	843252.4643	1488483.9537
PC	606+29.60	843495.0246	1488514.5053
PI	606+87.41	843552.3757	1488521.7289
PT	607+45.21	843609.8784	1488527.6248
PC	608+46.30	843710.4435	1488537.9358
PI	609+26.81	843790.5332	1488546.1475
PT	610+07.32	843870.4802	1488555.6477
PC	627+83.55	845634.3014	1488765.2433
PI	629+59.28	845808.8094	1488785.9802
PT	631+34.92	845984.2319	1488796.4678
POE	632+23.52	846072.6748	1488801.7554

LOWER NEWTON ROAD (VT 38)

POINT TYPE	STATION	NORTHING	EASTING
POB	800+00.00	846180.9168	1488546.7125
PC	800+99.19	846139.2353	1488636.7155
PI	801+63.75	846112.1051	1488695.2980
PRC	802+28.23	846090.1085	1488755.9949
PI	803+37.50	846052.8755	1488858.7352
PT	804+46.40	846001.1449	1488954.9943
PC	805+64.76	845945.1125	1489059.2580
PI	805+97.19	845929.7613	1489087.8230
PT	806+29.62	845915.3443	1489116.8708
PC	807+49.45	845862.0674	1489224.2145
PI	808+35.34	845823.8866	1489301.1419
PT	809+21.05	845794.1598	1489381.7144
POE	809+49.77	845784.2208	1489408.6535

LOWER WELDEN STREET

POINT TYPE	STATION	NORTHING	EASTING
POB	2001+75.00	841699.5631	1487667.0831
POE	2005+50.00	841572.4384	1488019.8781

LAKE STREET (VT 36)

POINT TYPE	STATION	NORTHING	EASTING
POB	37+50.00	842895.7984	1488165.8462
PC	40+29.45	842875.8205	1488444.5811
PI	40+75.67	842872.5160	1488490.6864
PT	41+21.90	842868.9984	1488536.7759
POE	41+50.00	842866.8598	1488564.7975

SOUTH MAIN STREET (US 7)

POINT TYPE	STATION	NORTHING	EASTING
POB	898+50.00	839238.4301	1487432.0233
PC	898+81.87	839265.8766	1487448.2311
PI	900+34.93	839397.6667	1487526.0564
PT	901+87.98	839529.9309	1487603.0735
POE	904+50.00	839756.3592	1487734.9222

NORTH MAIN STREET (US 7)

POINT TYPE	STATION	NORTHING	EASTING
POB	1001+50.00	845630.7536	1489386.2516
POE	1005+00.00	845977.0833	1489436.8059

ST. ALBANS STATE HIGHWAY (I-89 ACCESS)

POINT TYPE	STATION	NORTHING	EASTING
POB	3000+00.00	839422.7942	1487793.7379
PC	3000+50.00	839445.0855	1487748.9819
PI	3001+12.05	839472.7481	1487693.4414
PT	3001+74.03	839504.9032	1487640.3754
POE	3002+18.96	839528.1880	1487601.9482

LEGEND

POB	POINT OF BEGINNING ALIGNMENT
PC	POINT OF CURVATURE
PI	POINT OF INTERSECTION
PT	POINT OF TANGENCY
PCC	POINT OF COMPOIUND CURVATURE
PRC	POINT OF REVERSE CURVATURE
POE	POINT OF END ALIGNMENT

NOTE:

SEE ALIGNMENT LAYOUT PLANS FOR ADDITIONAL ALIGNMENT INFORMATION.

DATUM

VERTICAL NGVD 1929
HORIZONTAL NAD 83

PROJECT NAME: ST. ALBANS
PROJECT NUMBER: HPP 8000(17)

FILE NAME: 57414_AL1.dgn
PROJECT LEADER: J.D. SALADINO
DESIGNED BY: D. M. PECK
ALIGNMENT POINTS SHEET

PLOT DATE: 3/4/2016
DRAWN BY: G. GOMEZ
CHECKED BY: M.J. SERVETAS
SHEET 21 OF 230

CURVE NSC 1	CURVE NSC 2	CURVE SM 1	CURVE C 1
Δ = 11°38′47″	DELTA = 93°41′53″	Δ = 0°21′03″	Δ = 4°44′15″
Dc = 4°46′29″	Dc = 57°17′45″	Dc = 0°06′53″	Dc = 3°49′11″
R = 1200.00′	R = 100.00′	R = 50000.00′	R = 1500.00′
T = 122.38′	T = 106.67′	T = 153.05′	T = 62.05′
L = 243.92′	L = 163.53′	L = 306.11′	L = 124.03′
E = 6.22′	E = 46.22′	E = 0.23′	E = 1.28′

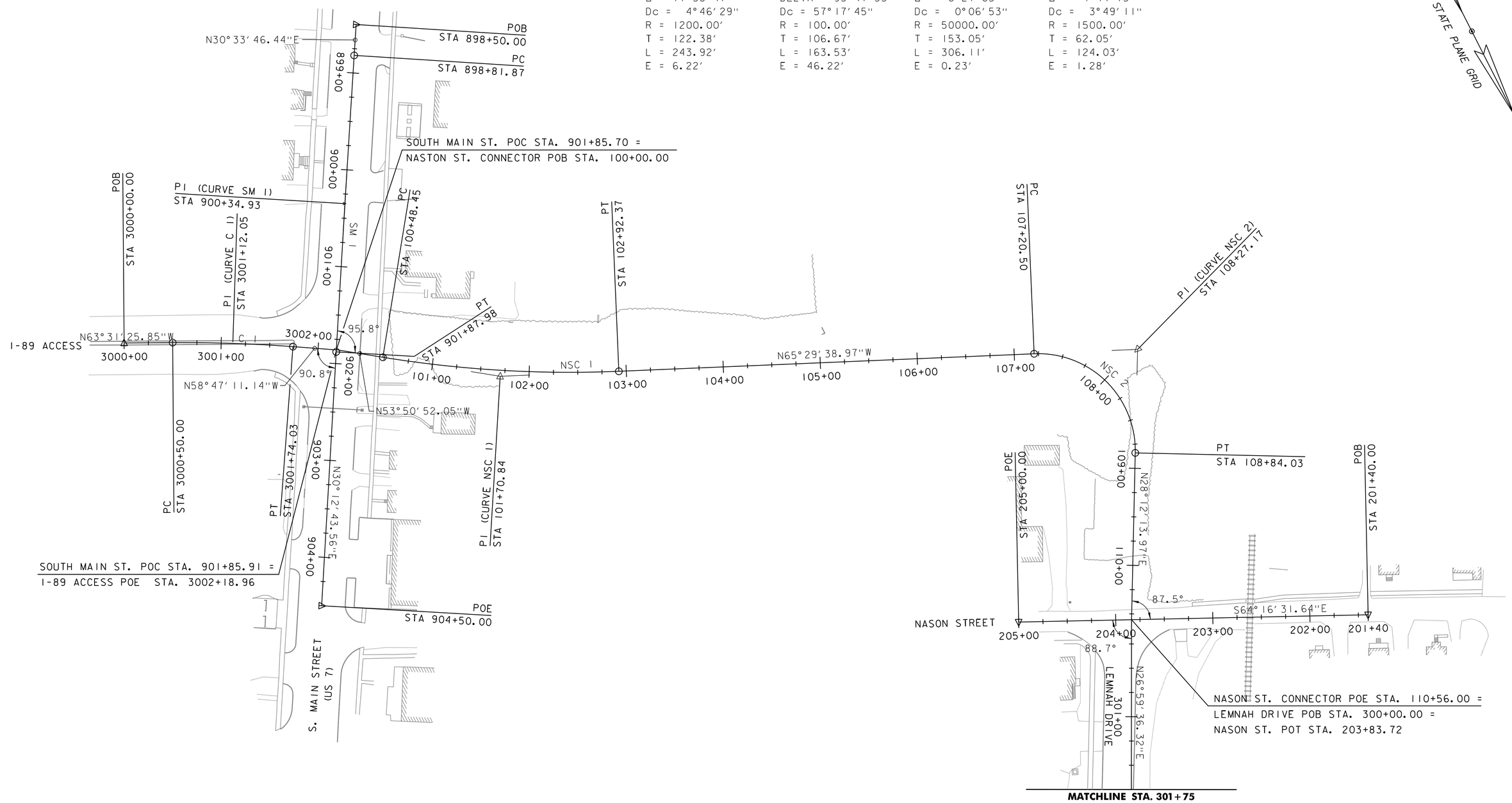

0 50 100
SCALE IN FEET

vhb

PROJECT NAME: ST. ALBANS	
PROJECT NUMBER: HPP 8000(17)	
FILE NAME: 57414_AL1.dgn	PLOT DATE: 3/4/2016
PROJECT LEADER: J. D. SALADINO	DRAWN BY: G. GOMEZ
DESIGNED BY: D. M. PECK	CHECKED BY: M.J. SERVETAS
ALIGNMENTS LAYOUT SHEET (1 OF 6)	SHEET 22 OF 230

CURVE LD 1
Δ = 5°39′36″ L
Dc = 3°49′11″
R = 1500.00′
T = 74.15′
L = 148.18′
E = 1.83′

CURVE LD 2
Δ = 7°30′50″ R
Dc = 4°48′02″
R = 1193.50′
T = 78.37′
L = 156.52′
E = 2.57′

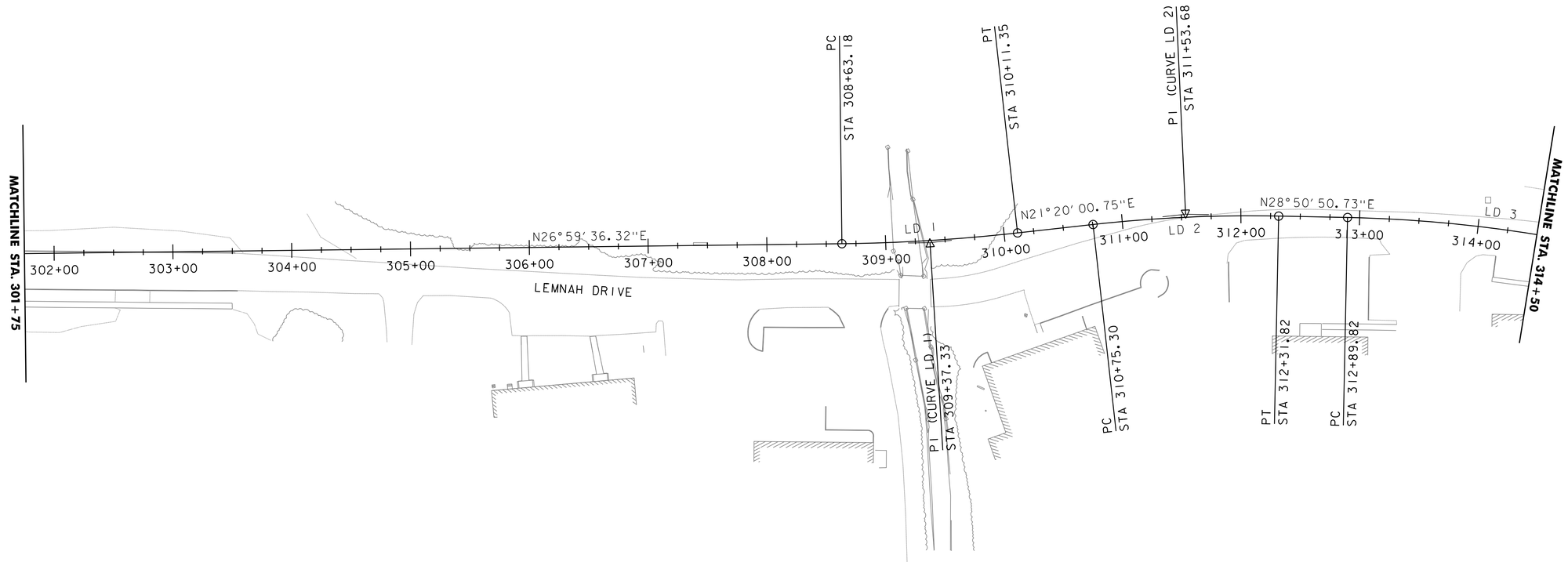

0 50 100
SCALE IN FEET

PROJECT NAME: ST. ALBANS	
PROJECT NUMBER: HPP 8000(17)	
FILE NAME: 57414_ALI.dgn	PLOT DATE: 3/4/2016
PROJECT LEADER: J. D. SALADINO	DRAWN BY: G. GOMEZ
DESIGNED BY: D. M. PECK	CHECKED BY: M.J. SERVETAS
ALIGNMENTS LAYOUT SHEET (2 OF 6)	SHEET 23 OF 230

CURVE LD 3	CURVE A 1	CURVE A 2	CURVE A 3	CURVE S 1
Δ = 21°56′17″ R	Δ = 12°42′50″	Δ = 23°58′57″	Δ = 40°21′35″	Δ = 88°28′59″
Dc = 4°59′59″	Dc = 5°28′39″	Dc = 14°41′28″	Dc = 20°50′05″	Dc = 47°44′47″
R = 1146.00′	R = 1046.00′	R = 390.00′	R = 275.00′	R = 120.00′
T = 222.12′	T = 116.53′	T = 82.83′	T = 101.07′	T = 116.86′
L = 438.79′	L = 232.11′	L = 163.24′	L = 193.71′	L = 185.32′
E = 21.33′	E = 6.47′	E = 8.70′	E = 17.99′	E = 47.50′

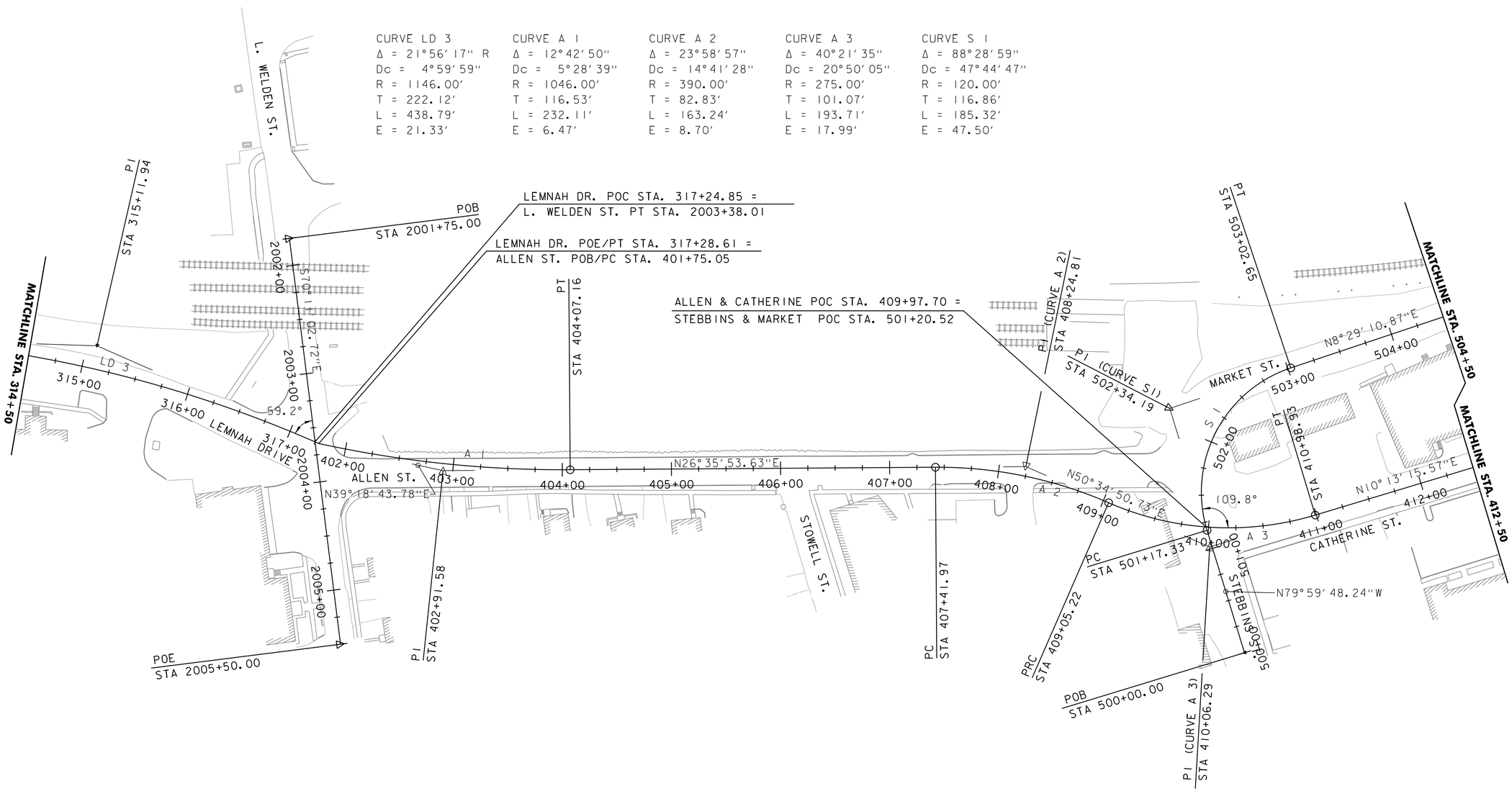

0 550 100
SCALE IN FEET

vhb

PROJECT NAME: ST. ALBANS	
PROJECT NUMBER: HPP 8000(17)	
FILE NAME: 57414_ALI.dgn	PLOT DATE: 3/4/2016
PROJECT LEADER: J. D. SALADINO	DRAWN BY: G. GOMEZ
DESIGNED BY: D. M. PECK	CHECKED BY: M.J. SERVETAS
ALIGNMENTS LAYOUT SHEET (3 OF 6)	SHEET 24 OF 230

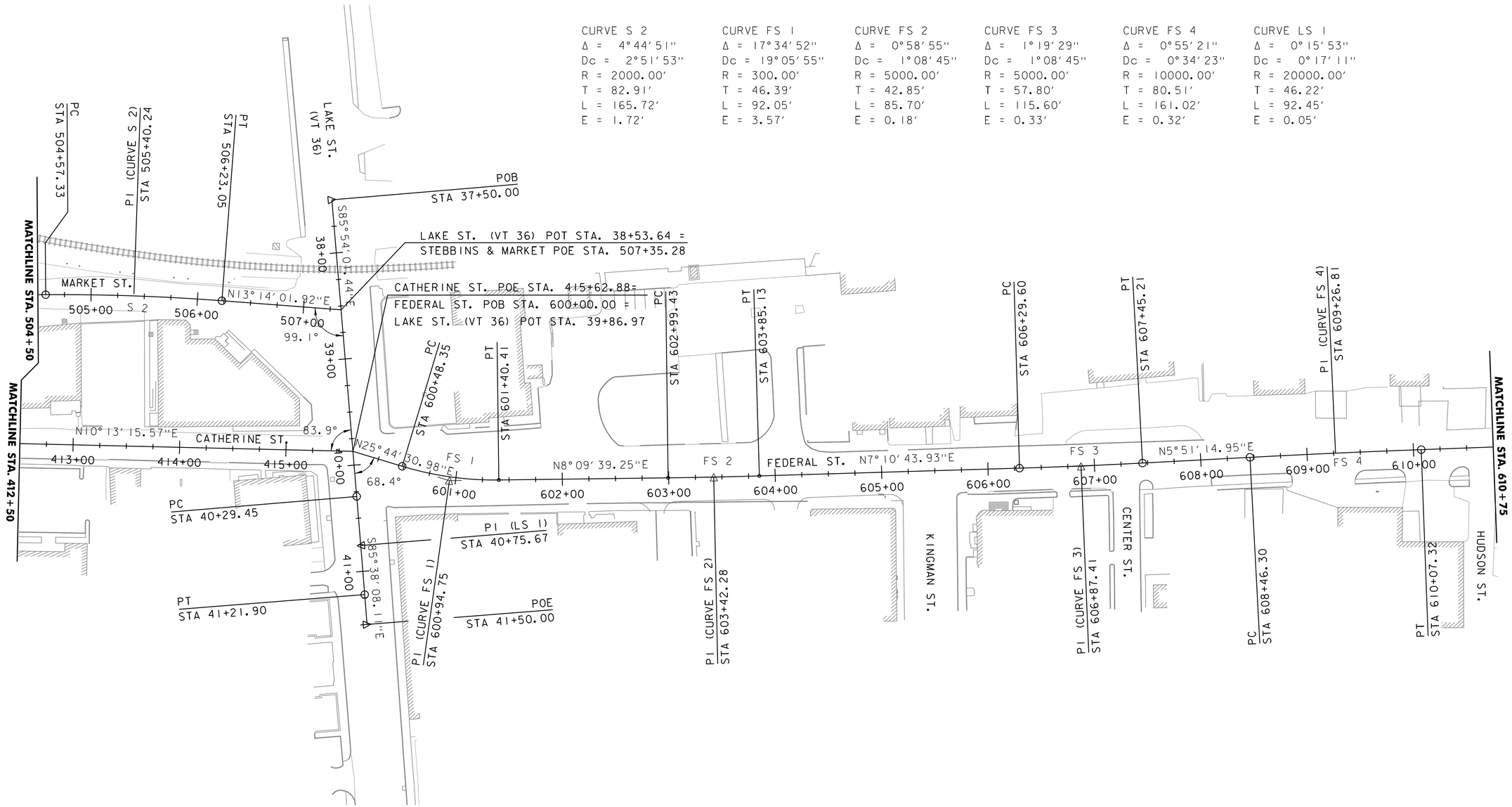

PROJECT NAME: ST. ALBANS	
PROJECT NUMBER: HPP 8000(17)	
FILE NAME: 57414_ALI.dgn	PLOT DATE: 3/4/2016
PROJECT LEADER: J. D. SALADINO	DRAWN BY: G. GOMEZ
DESIGNED BY: D. M. PECK	CHECKED BY: M.J. SERVETAS
ALIGNMENTS LAYOUT SHEET (4 OF 6)	SHEET 25 OF 230

VHB 57414.00

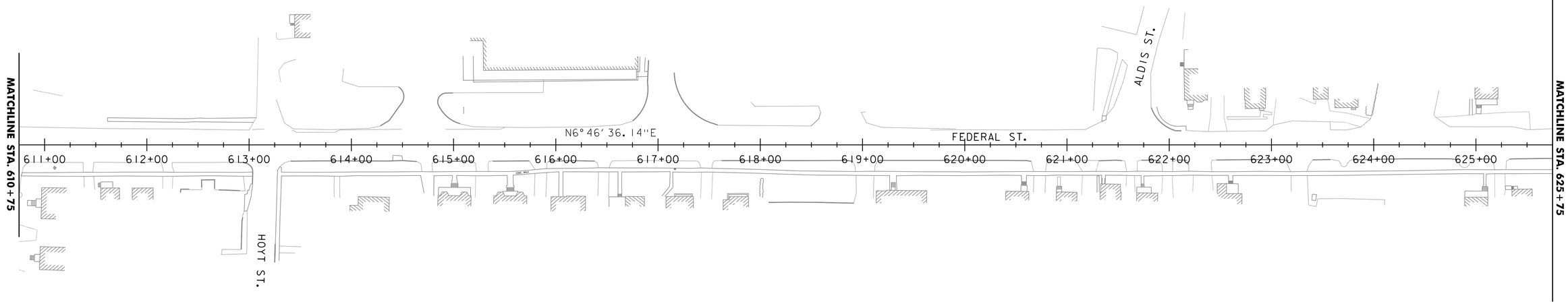

0 50 100
SCALE IN FEET

PROJECT NAME: ST. ALBANS	
PROJECT NUMBER: HPP 8000(17)	
FILE NAME: 57414_AL1.dgn	PLOT DATE: 3/4/2016
PROJECT LEADER: J. D. SALADINO	DRAWN BY: G. GOMEZ
DESIGNED BY: D. M. PECK	CHECKED BY: M.J. SERVETAS
ALIGNMENTS LAYOUT SHEET (5 OF 6)	SHEET 26 OF 230

VHB 57414.00

CURVE FS 5	CURVE LN 1	CURVE LN 2	CURVE LN 3	CURVE LN 4
Δ = 3°21′19″	Δ = 4°55′44″	Δ = 8°20′01″	Δ = 1°51′28″	Δ = 6°08′42″
Dc = 0°57′18″	Dc = 3°49′11″	Dc = 3°49′11″	Dc = 2°51′53″	Dc = 3°34′52″
R = 6000.00′	R = 1500.00′	R = 1500.00′	R = 2000.00′	R = 1600.00′
T = 175.74′	T = 64.56′	T = 109.28′	T = 32.43′	T = 85.88′
L = 351.37′	L = 129.04′	L = 218.17′	L = 64.85′	L = 171.60′
E = 2.57′	E = 1.39′	E = 3.98′	E = 0.26′	E = 2.30′

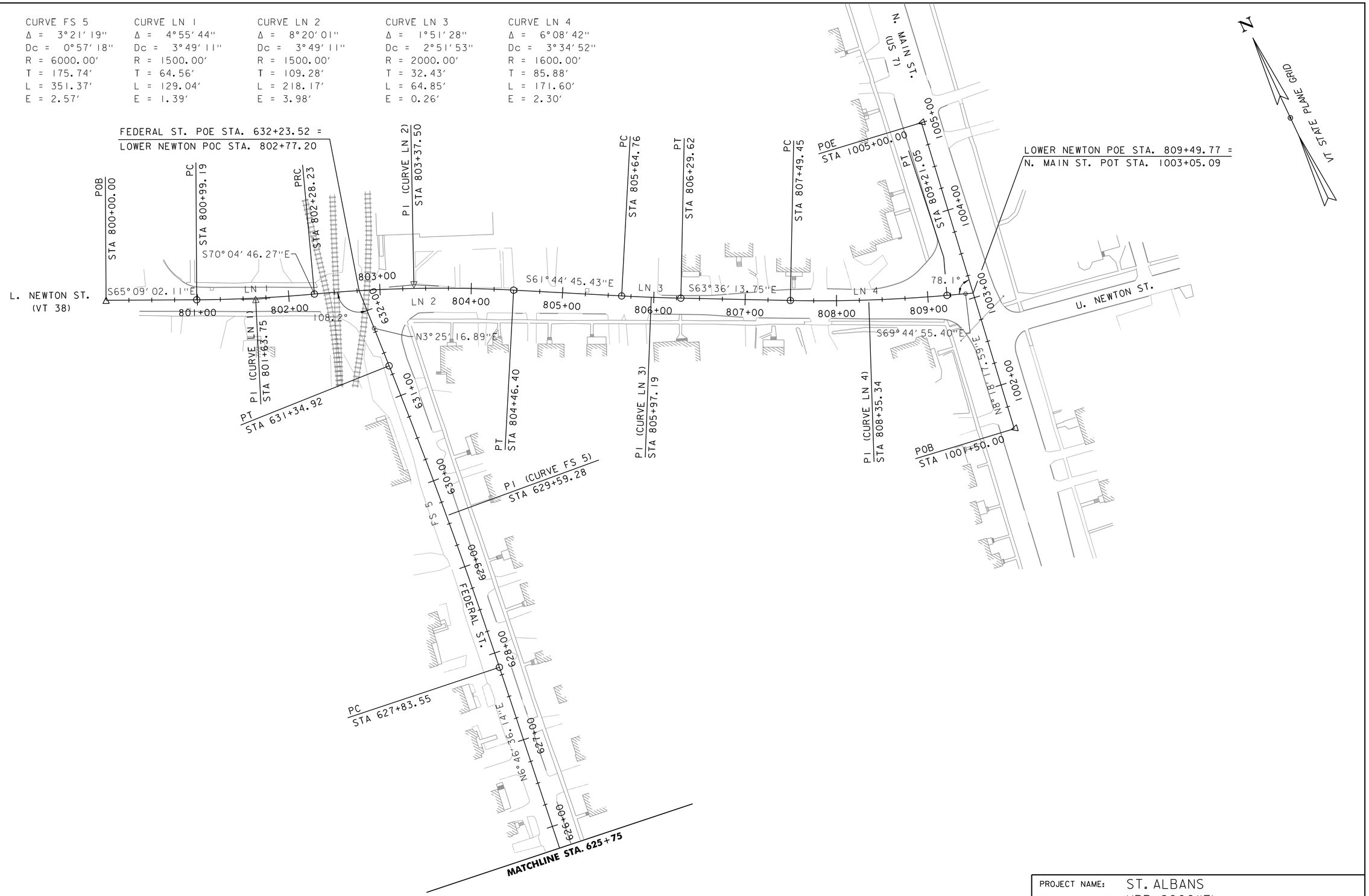

0 50 100
SCALE IN FEET

PROJECT NAME: ST. ALBANS	
PROJECT NUMBER: HPP 8000(17)	
FILE NAME: 57414_ALI.dgn	PLOT DATE: 3/4/2016
PROJECT LEADER: J. D. SALADINO	DRAWN BY: G. GOMEZ
DESIGNED BY: D. M. PECK	CHECKED BY: M.J. SERVETAS
ALIGNMENTS LAYOUT SHEET (6 OF 6)	SHEET 27 OF 230

VHB 57414.00

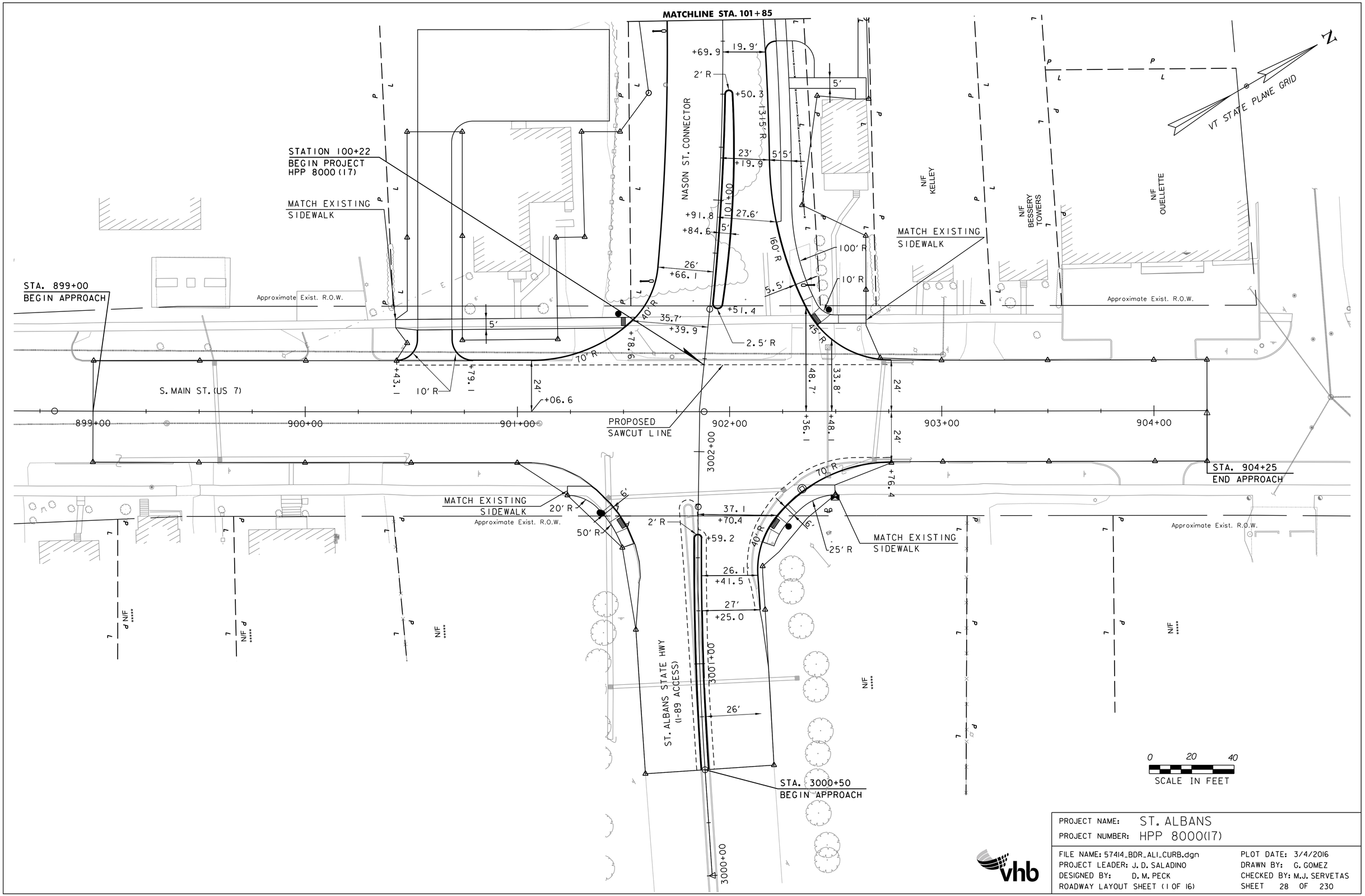

PROJECT NAME: ST. ALBANS	
PROJECT NUMBER: HPP 8000(17)	
FILE NAME: 57414_BDR_ALI_CURB.dgn	PLOT DATE: 3/4/2016
PROJECT LEADER: J. D. SALADINO	DRAWN BY: G. GOMEZ
DESIGNED BY: D. M. PECK	CHECKED BY: M.J. SERVETAS
ROADWAY LAYOUT SHEET (1 OF 16)	SHEET 28 OF 230

VHB 57414.00

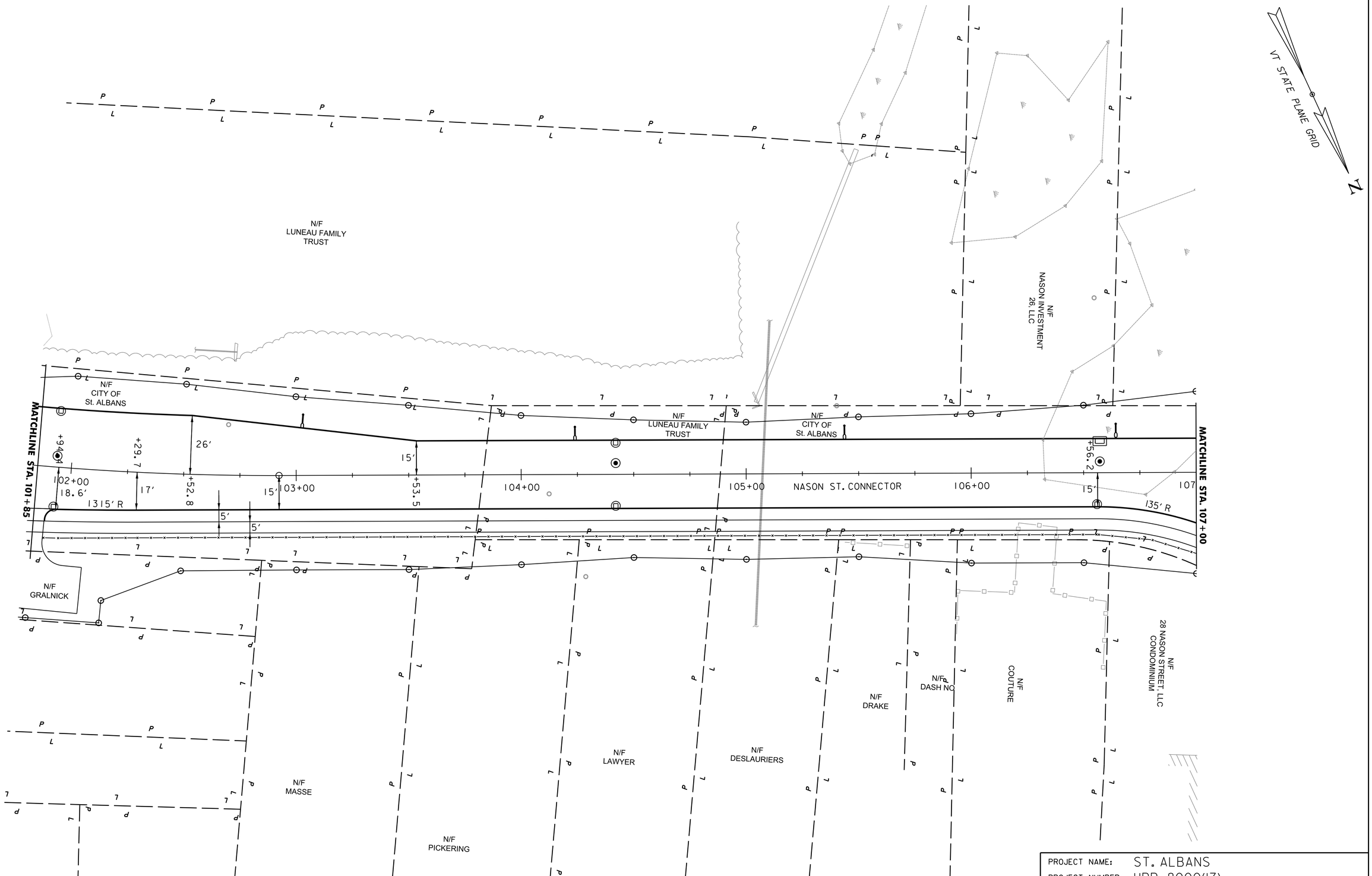

PROJECT NAME: ST. ALBANS
PROJECT NUMBER: HPP 8000(17)

FILE NAME: 57414_BDR_ALI_CURB.dgn
PROJECT LEADER: J. D. SALADINO
DESIGNED BY: D. M. PECK
ROADWAY LAYOUT SHEET (2 OF 16)

PLOT DATE: 3/4/2016
DRAWN BY: G. GOMEZ
CHECKED BY: M.J. SERVETAS
SHEET 29 OF 230

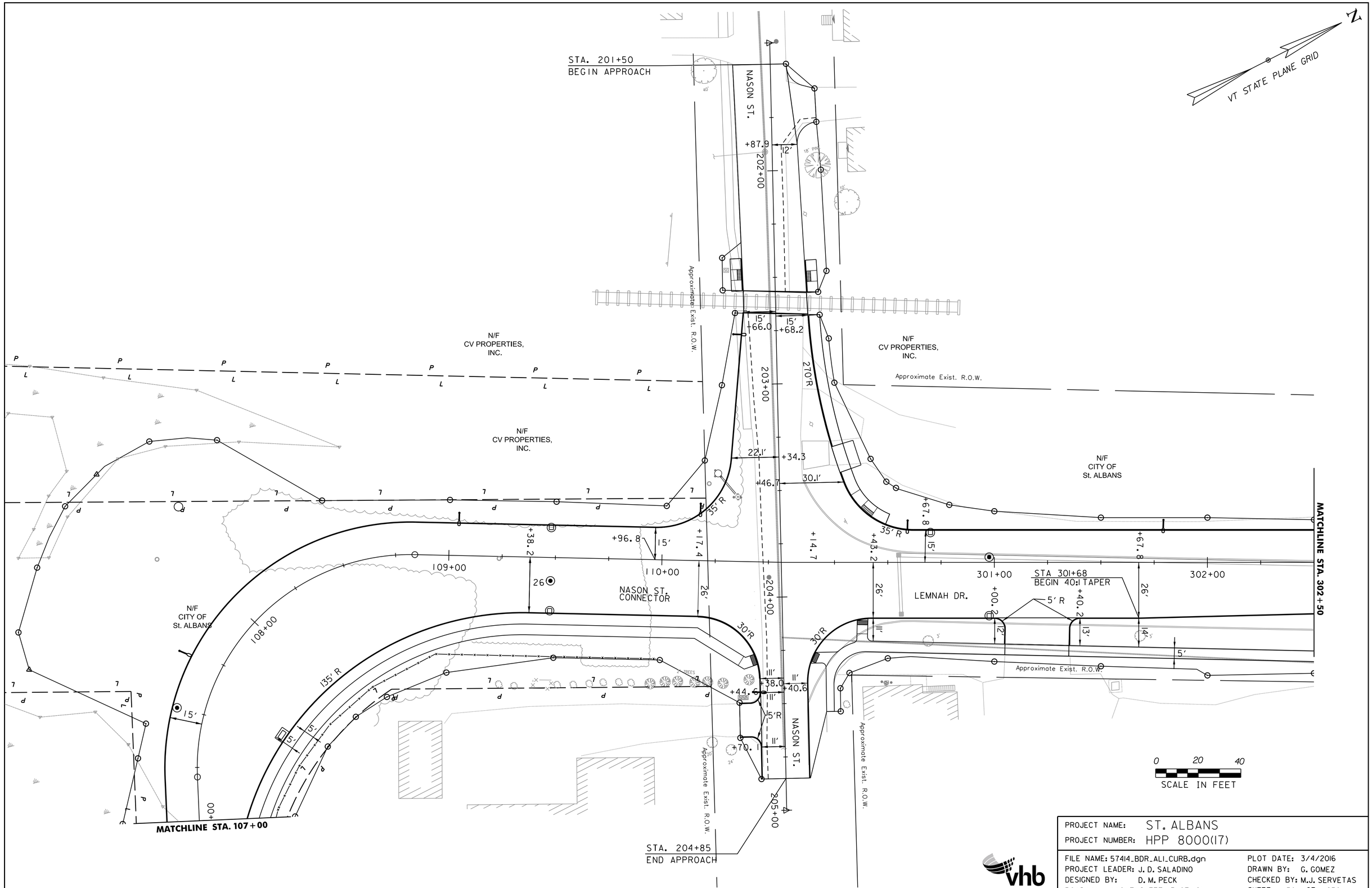

PROJECT NAME: ST. ALBANS	
PROJECT NUMBER: HPP 8000(17)	
FILE NAME: 57414_BDR_ALI_CURB.dgn	PLOT DATE: 3/4/2016
PROJECT LEADER: J. D. SALADINO	DRAWN BY: G. GOMEZ
DESIGNED BY: D. M. PECK	CHECKED BY: M.J. SERVETAS
ROADWAY LAYOUT SHEET (3 OF 16)	SHEET 30 OF 230

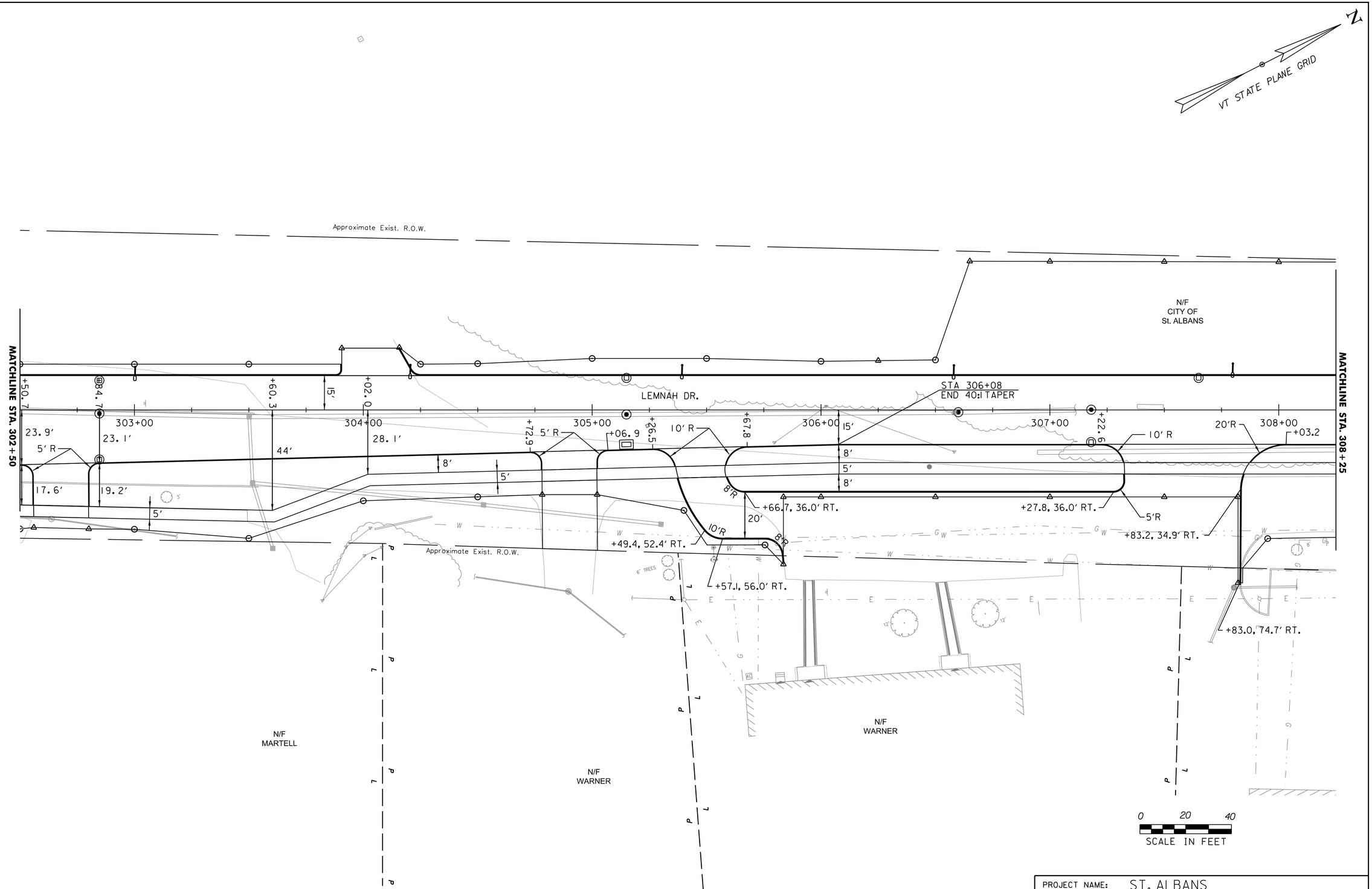

PROJECT NAME: ST. ALBANS	
PROJECT NUMBER: HPP 8000(17)	
FILE NAME: 57414_BDR_ALI_CURB.dgn	PLOT DATE: 3/4/2016
PROJECT LEADER: J. D. SALADINO	DRAWN BY: G. GOMEZ
DESIGNED BY: D. M. PECK	CHECKED BY: M.J. SERVETAS
ROADWAY LAYOUT SHEET (4 OF 16)	SHEET 31 OF 230

VHB 57414.00

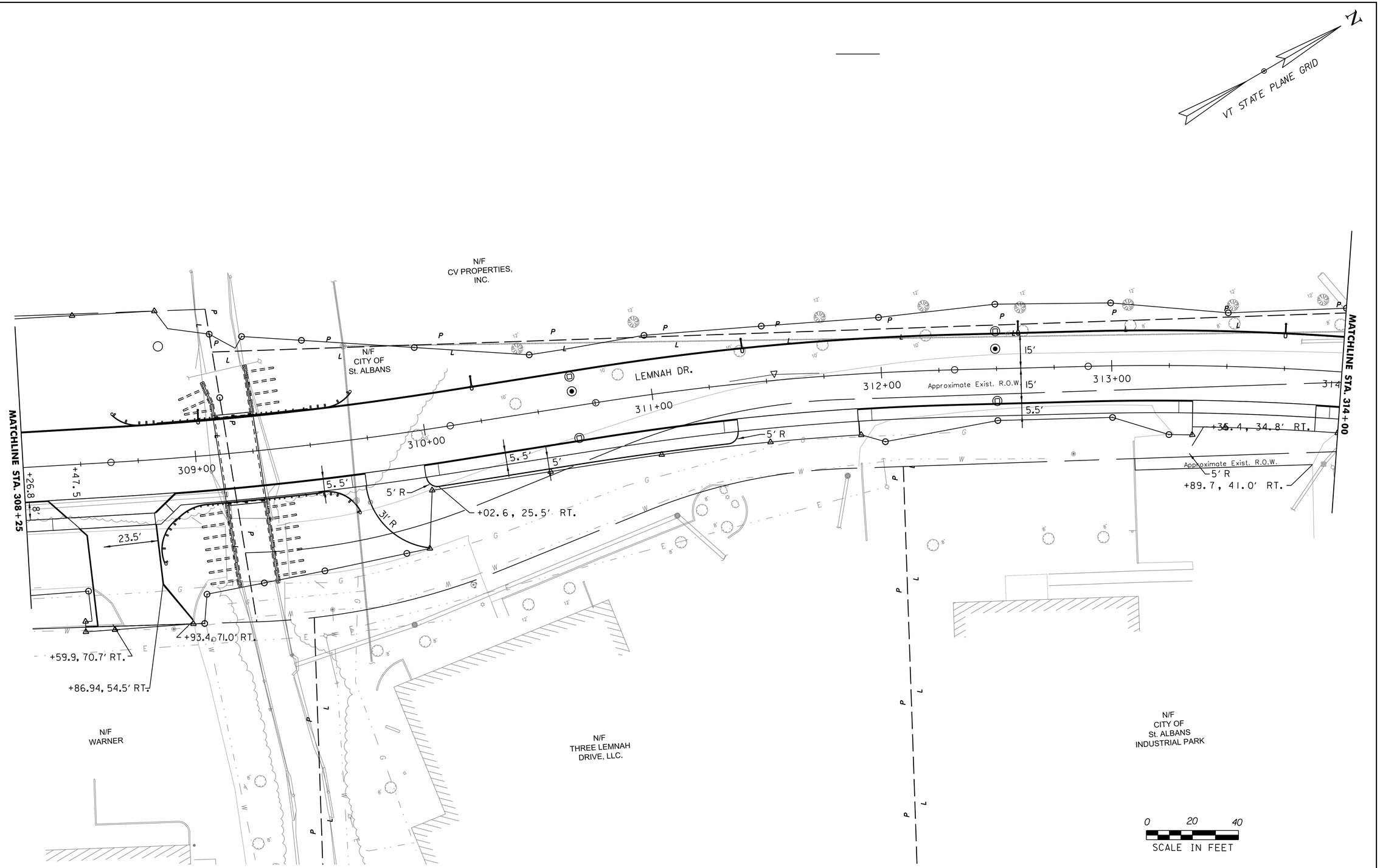

PROJECT NAME: ST. ALBANS	
PROJECT NUMBER: HPP 8000(17)	
FILE NAME: 57414_BDR_ALI_CURB.dgn	PLOT DATE: 3/4/2016
PROJECT LEADER: J. D. SALADINO	DRAWN BY: G. GOMEZ
DESIGNED BY: D. M. PECK	CHECKED BY: M.J. SERVETAS
ROADWAY LAYOUT SHEET (6 OF 16)	SHEET 32 OF 230

VHB 57414.00

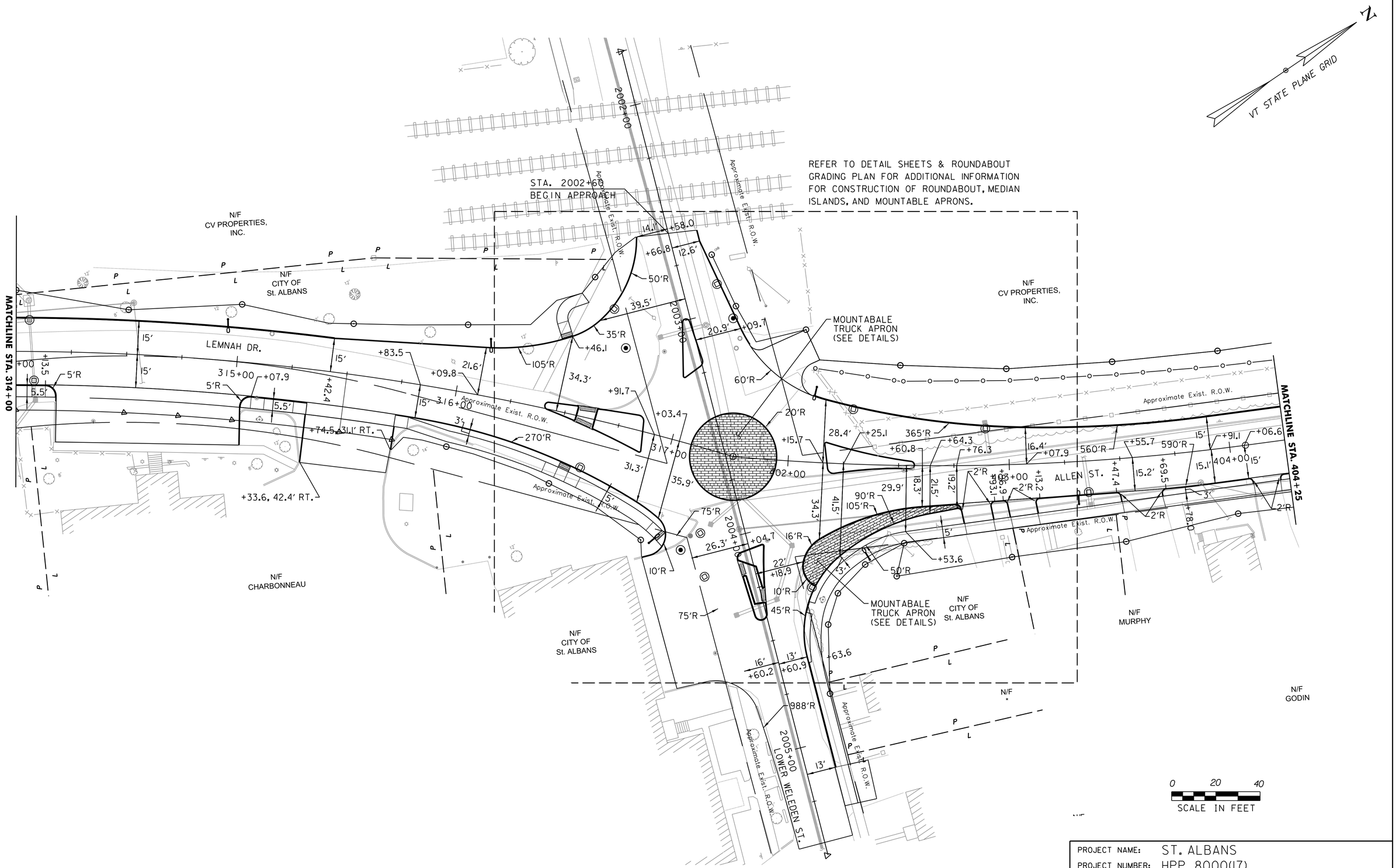

PROJECT NAME: ST. ALBANS	
PROJECT NUMBER: HPP 8000(17)	
FILE NAME: 57414_BDR_ALI_CURB.dgn	PLOT DATE: 3/4/2016
PROJECT LEADER: J. D. SALADINO	DRAWN BY: G. GOMEZ
DESIGNED BY: D. M. PECK	CHECKED BY: M.J. SERVETAS
ROADWAY LAYOUT SHEET (7 OF 16)	SHEET 33 OF 230

VHB 57414.00

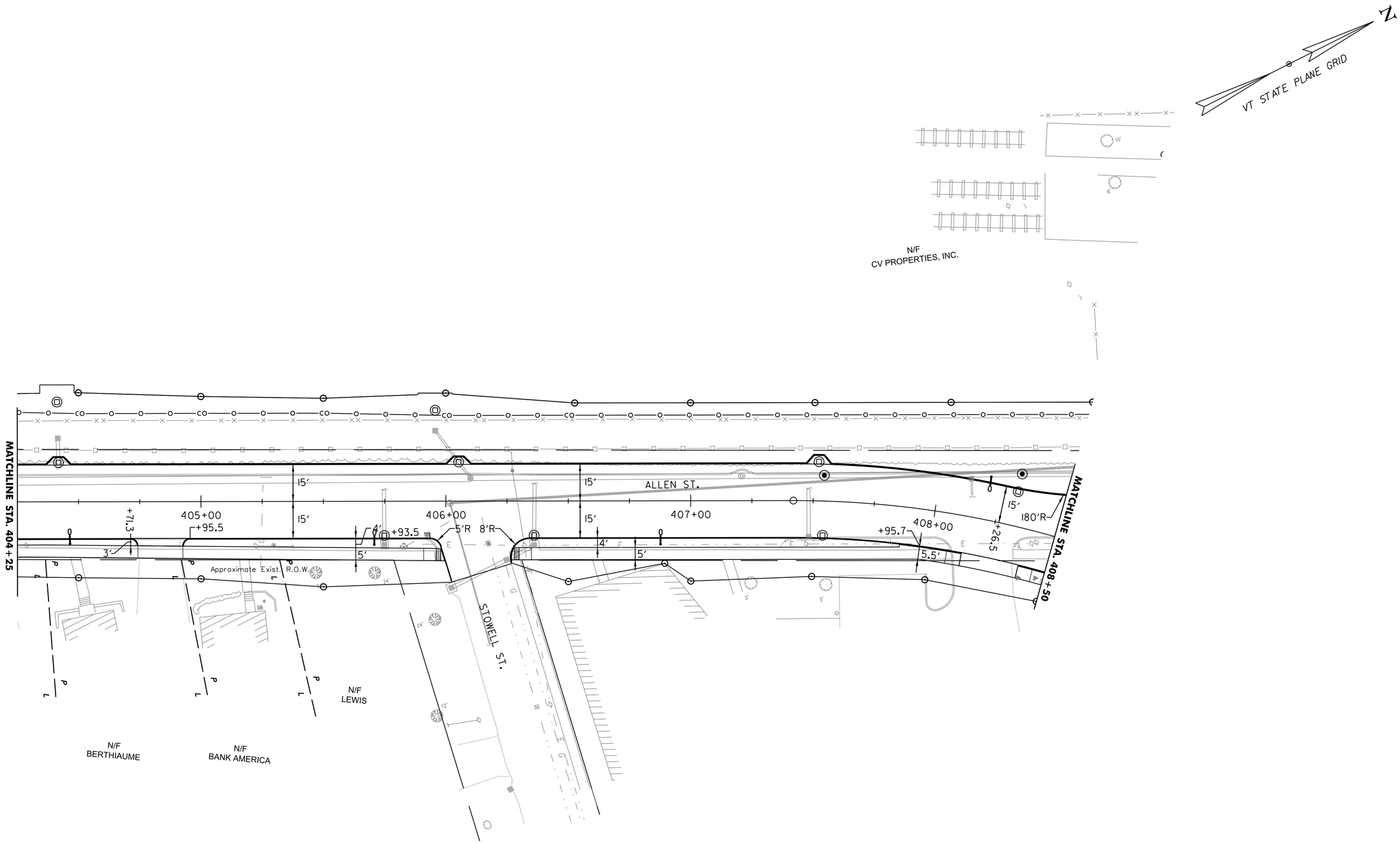

PROJECT NAME: ST. ALBANS	
PROJECT NUMBER: HPP 8000(17)	
FILE NAME: 57414_BDR_ALI_CURB.dgn	PLOT DATE: 3/4/2016
PROJECT LEADER: J. D. SALADINO	DRAWN BY: G. GOMEZ
DESIGNED BY: D. M. PECK	CHECKED BY: M.J. SERVETAS
ROADWAY LAYOUT SHEET (8 OF 16)	SHEET 34 OF 230

VHB 57414.00

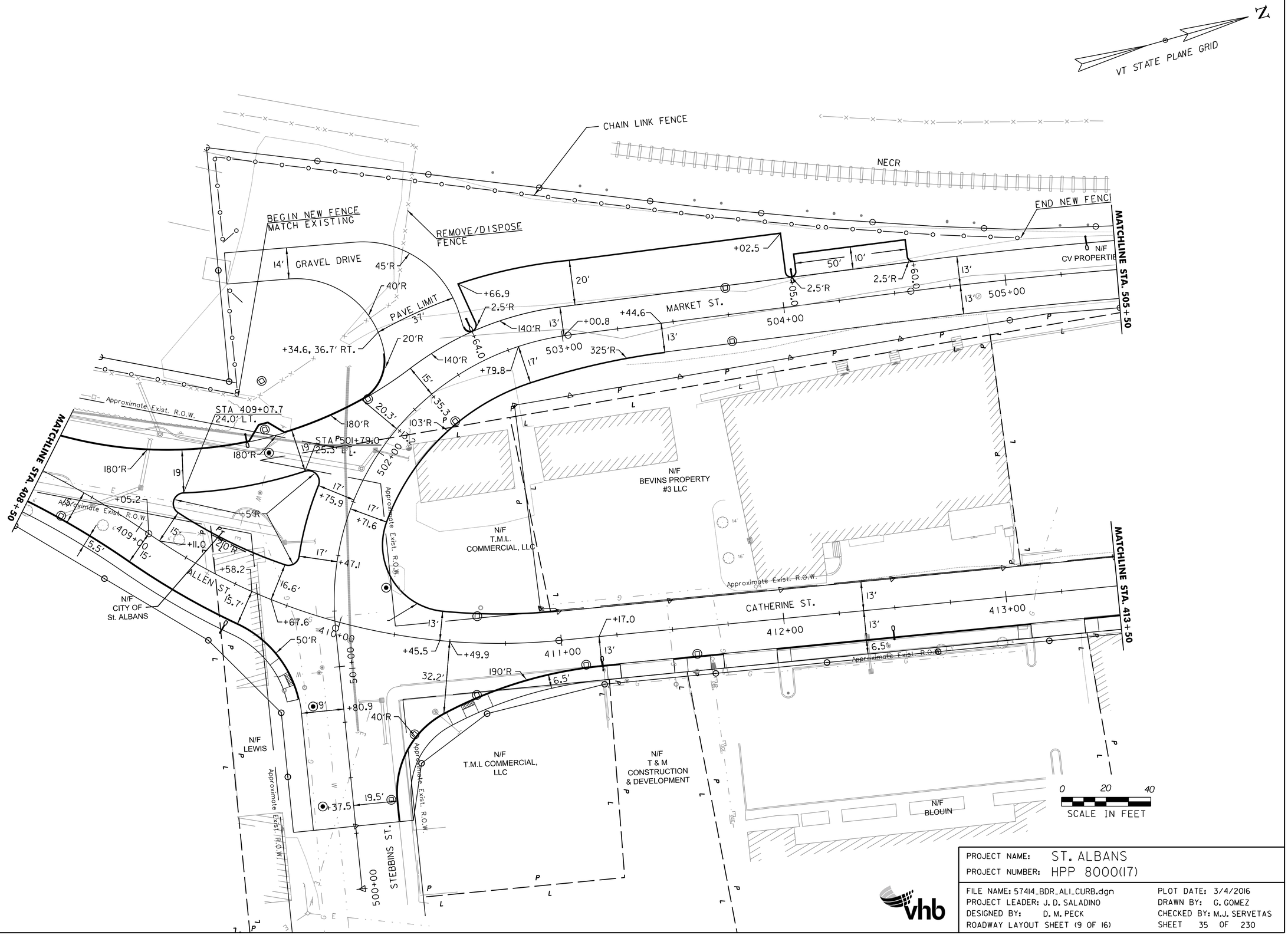

PROJECT NAME:	ST. ALBANS
PROJECT NUMBER:	HPP 8000(17)

FILE NAME: 57414_BDR_ALI_CURB.dgn	PLOT DATE: 3/4/2016
PROJECT LEADER: J. D. SALADINO	DRAWN BY: G. GOMEZ
DESIGNED BY: D. M. PECK	CHECKED BY: M.J. SERVETAS
ROADWAY LAYOUT SHEET (9 OF 16)	SHEET 35 OF 230

vhb

VHB 57414.00

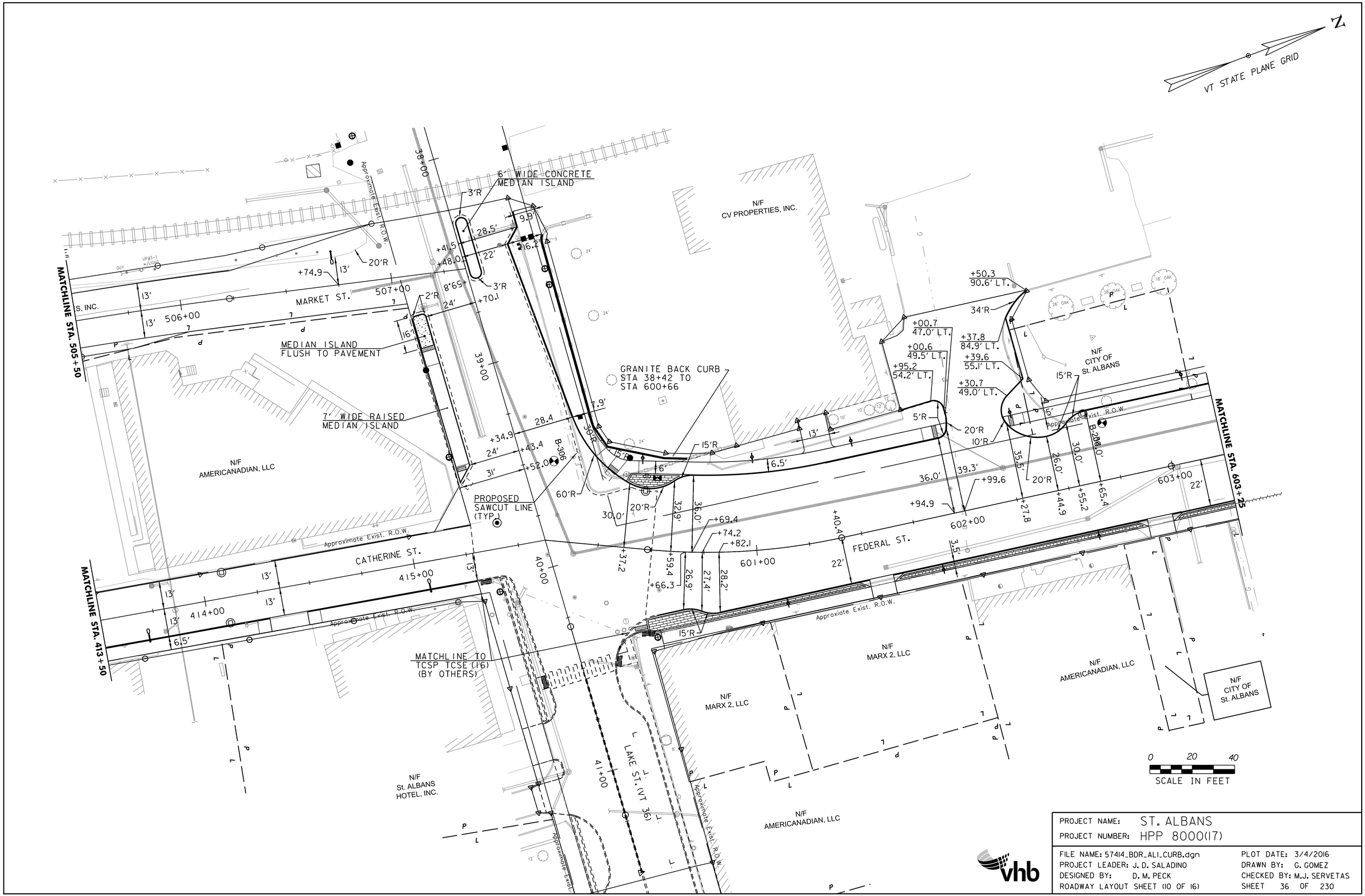

PROJECT NAME: ST. ALBANS	
PROJECT NUMBER: HPP 8000(17)	
FILE NAME: 57414_BDR_ALI_CURB.dgn	PLOT DATE: 3/4/2016
PROJECT LEADER: J. D. SALADINO	DRAWN BY: G. GOMEZ
DESIGNED BY: D. M. PECK	CHECKED BY: M.J. SERVETAS
ROADWAY LAYOUT SHEET (10 OF 16)	SHEET 36 OF 230

VHB 57414.00

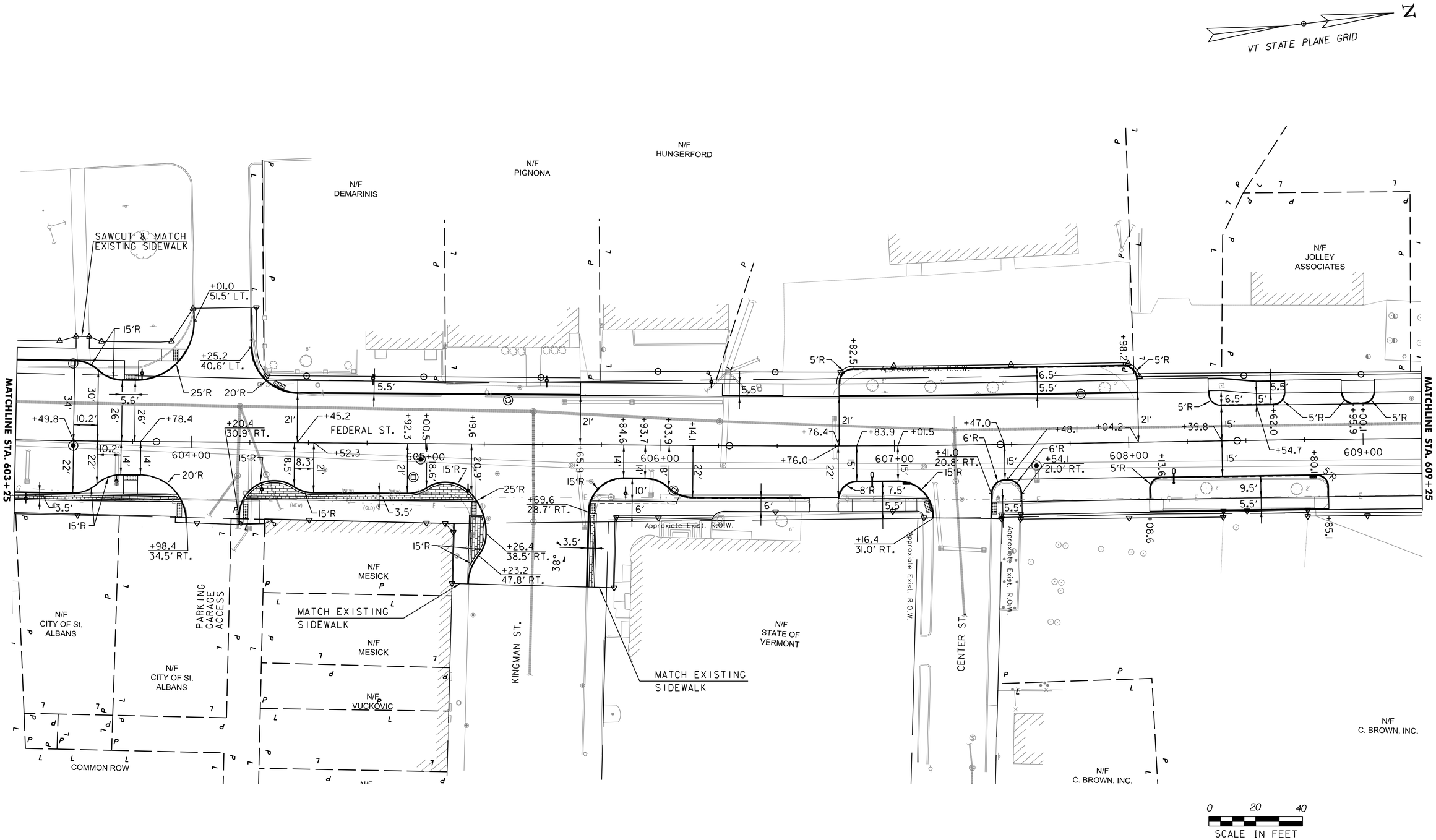

PROJECT NAME: ST. ALBANS	
PROJECT NUMBER: HPP 8000(17)	
FILE NAME: 57414_BDR_ALI_CURB.dgn	PLOT DATE: 3/4/2016
PROJECT LEADER: J. D. SALADINO	DRAWN BY: G. GOMEZ
DESIGNED BY: D. M. PECK	CHECKED BY: M.J. SERVETAS
ROADWAY LAYOUT SHEET (11 OF 16)	SHEET 37 OF 230

VHB 57414.00

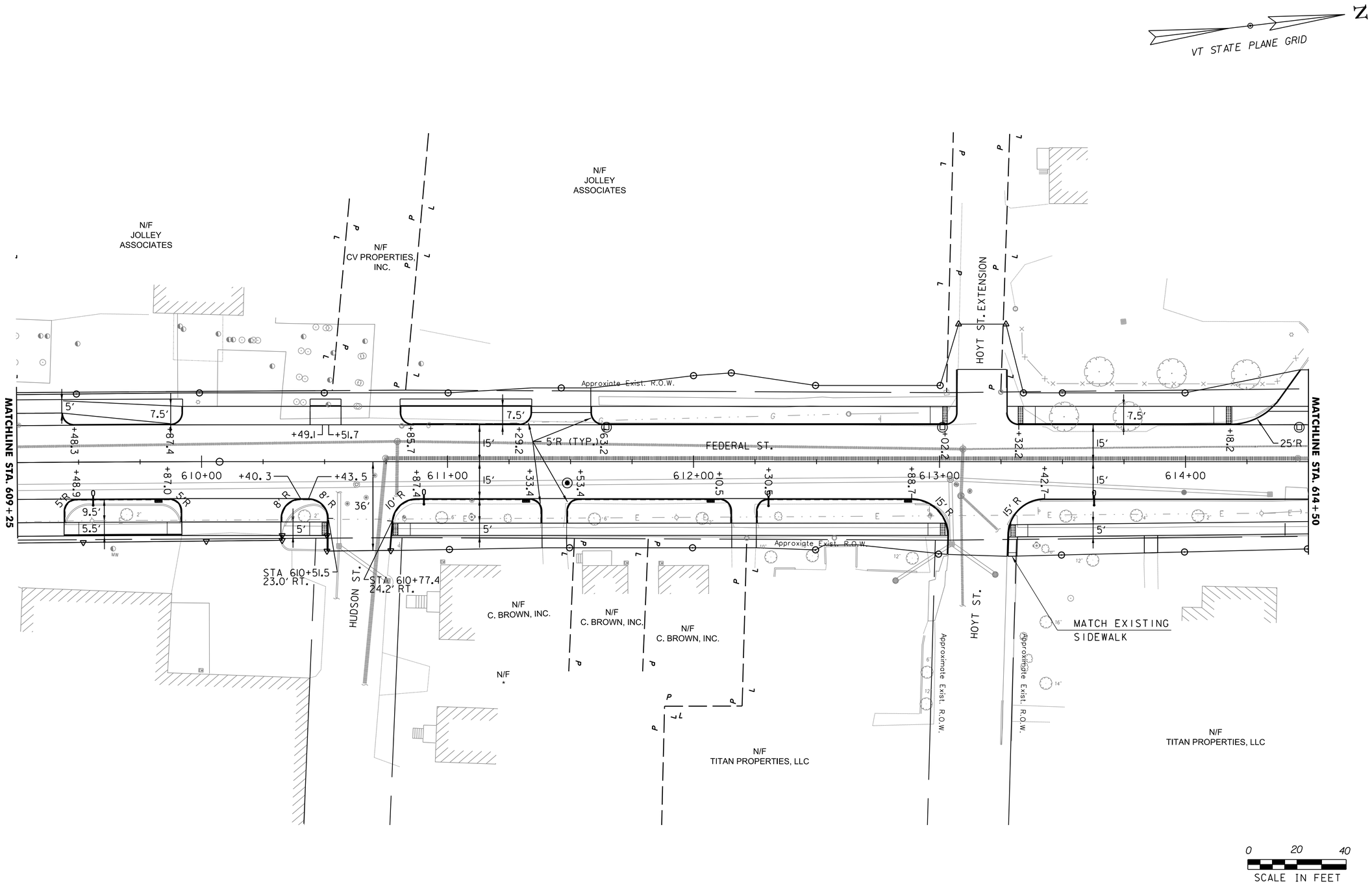

PROJECT NAME: ST. ALBANS	
PROJECT NUMBER: HPP 8000(17)	
FILE NAME: 57414_BDR_ALI_CURB.dgn	PLOT DATE: 3/4/2016
PROJECT LEADER: J. D. SALADINO	DRAWN BY: G. GOMEZ
DESIGNED BY: D. M. PECK	CHECKED BY: M.J. SERVETAS
ROADWAY LAYOUT SHEET (12 OF 16)	SHEET 38 OF 230

VHB 57414.00

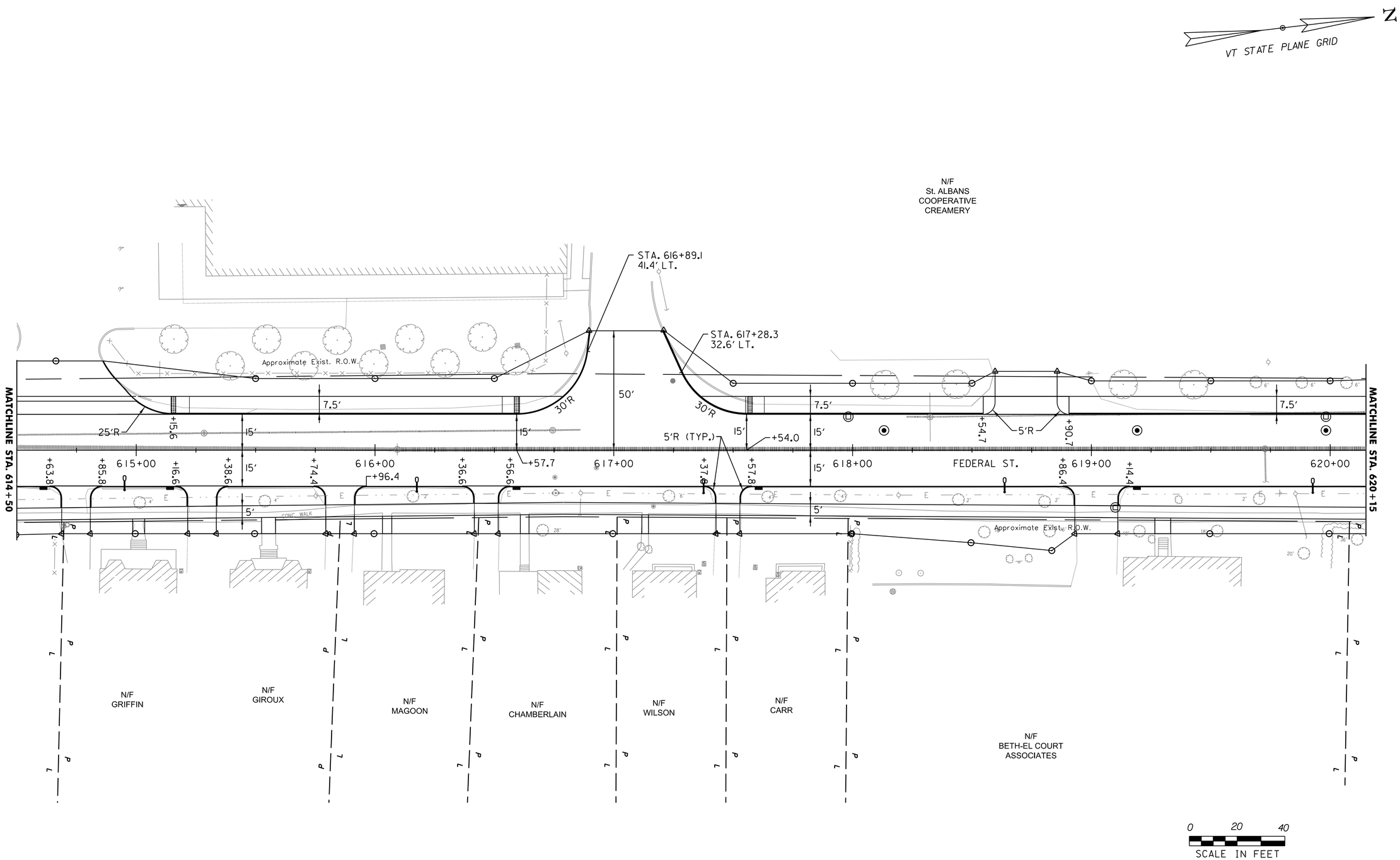

PROJECT NAME: ST. ALBANS	
PROJECT NUMBER: HPP 8000(17)	
FILE NAME: 57414_BDR_ALI_CURB.dgn	PLOT DATE: 3/4/2016
PROJECT LEADER: J. D. SALADINO	DRAWN BY: G. GOMEZ
DESIGNED BY: D. M. PECK	CHECKED BY: M.J. SERVETAS
ROADWAY LAYOUT SHEET (13 OF 16)	SHEET 39 OF 230

VHB 57414.00

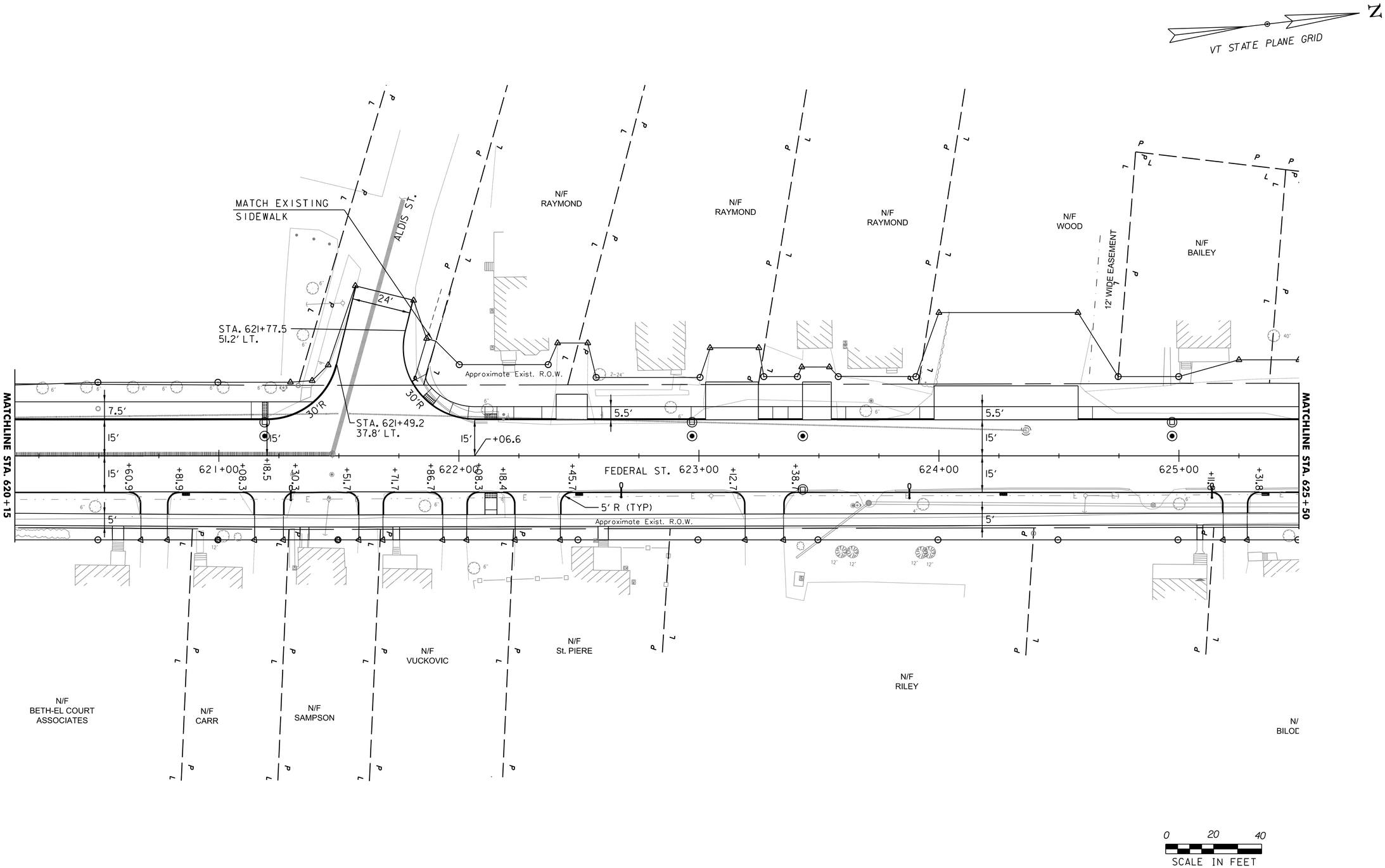

PROJECT NAME: ST. ALBANS	
PROJECT NUMBER: HPP 8000(17)	
FILE NAME: 57414_BDR_ALI_CURB.dgn	PLOT DATE: 3/4/2016
PROJECT LEADER: J. D. SALADINO	DRAWN BY: G. GOMEZ
DESIGNED BY: D. M. PECK	CHECKED BY: M.J. SERVETAS
ROADWAY LAYOUT SHEET (14 OF 16)	SHEET 40 OF 230

VHB 57414.00

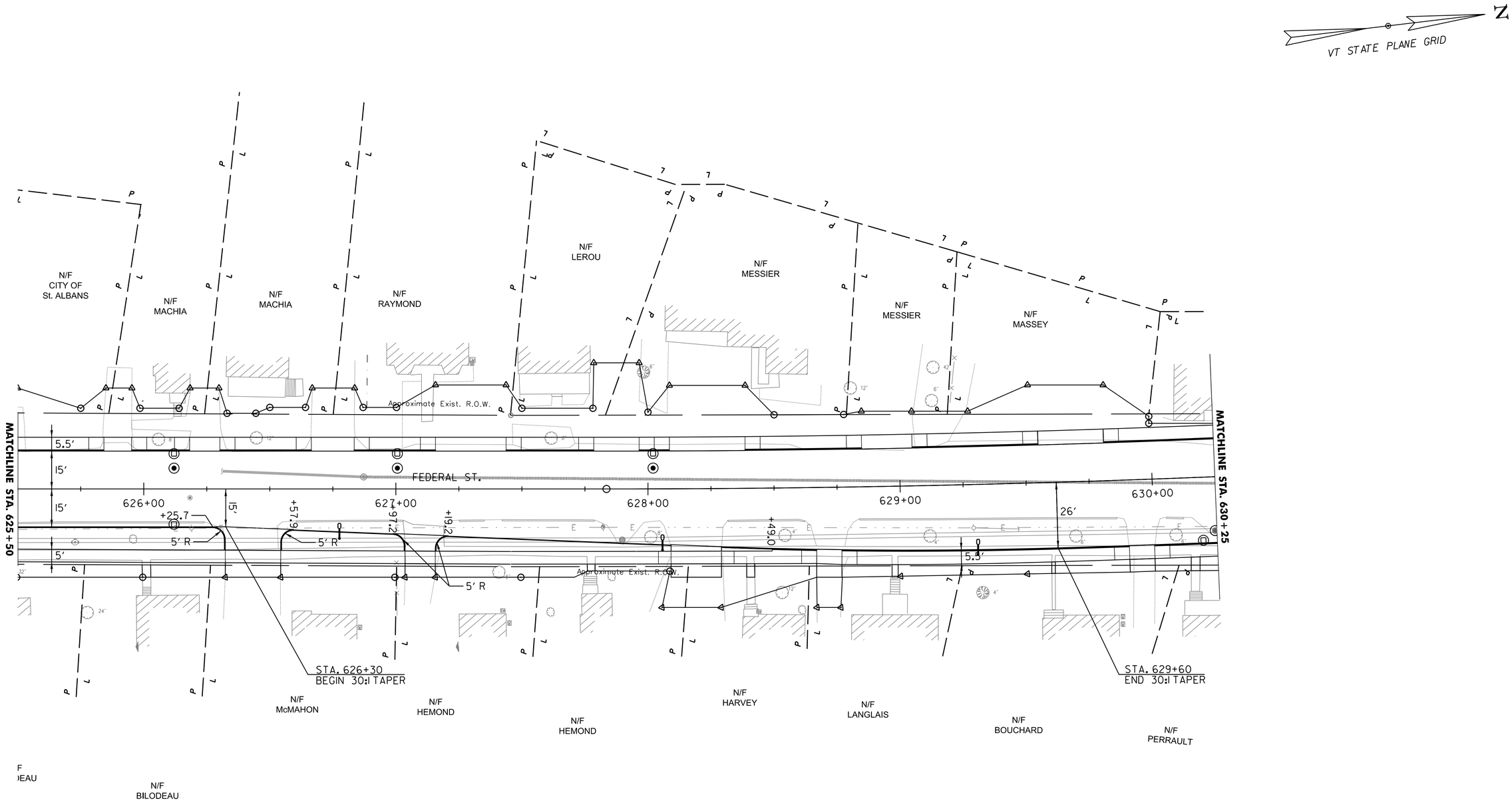

PROJECT NAME: ST. ALBANS	
PROJECT NUMBER: HPP 8000(17)	
FILE NAME: 57414_BDR_ALI_CURB.dgn	PLOT DATE: 3/4/2016
PROJECT LEADER: J. D. SALADINO	DRAWN BY: G. GOMEZ
DESIGNED BY: D. M. PECK	CHECKED BY: M.J. SERVETAS
ROADWAY LAYOUT SHEET (15 OF 16)	SHEET 41 OF 230

VHB 57414.00

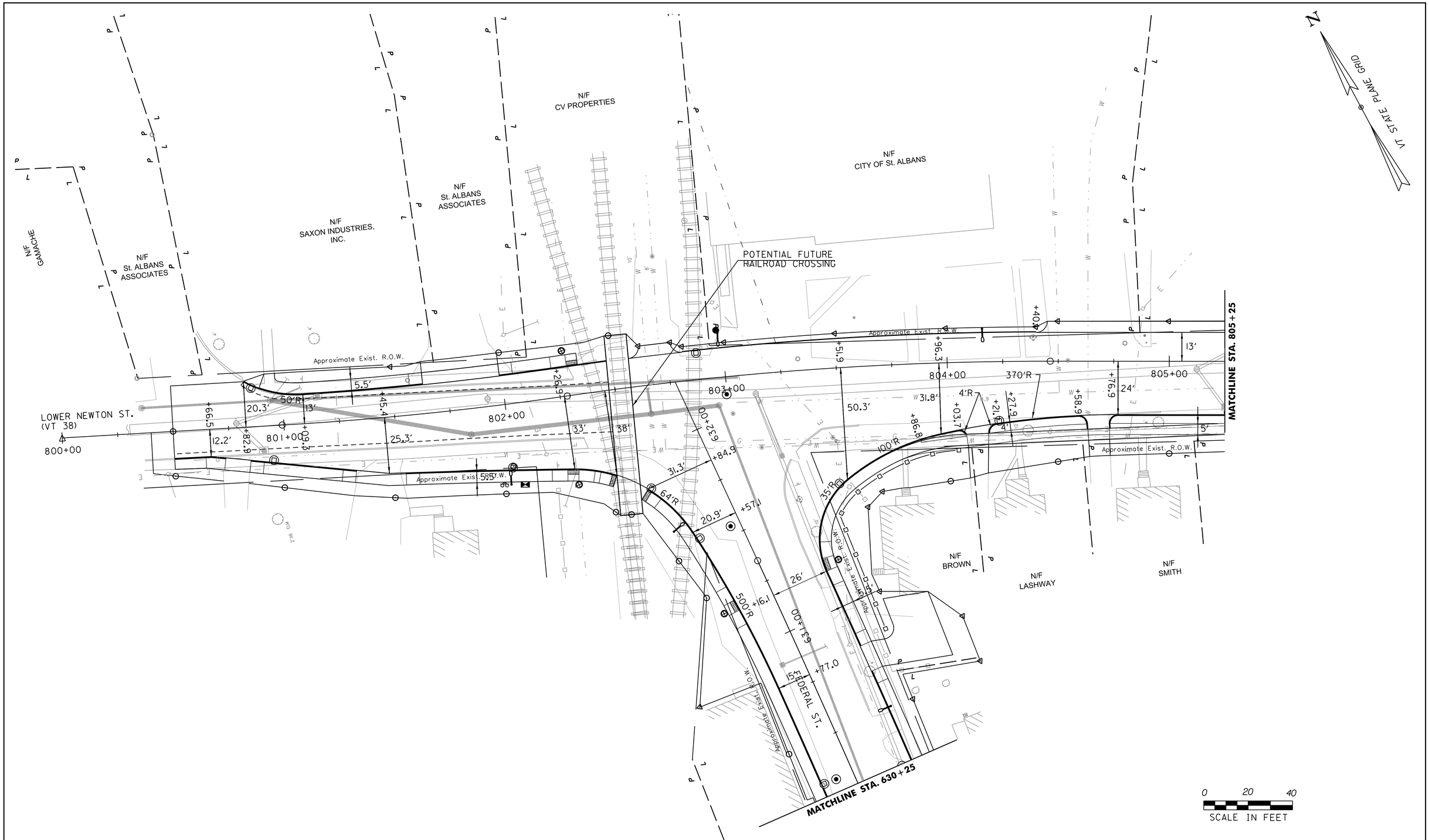

PROJECT NAME: ST. ALBANS	
PROJECT NUMBER: HPP 8000(17)	
FILE NAME: 57414_BDR_ALI_CURB.dgn	PLOT DATE: 3/4/2016
PROJECT LEADER: J. D. SALADINO	DRAWN BY: G. GOMEZ
DESIGNED BY: D. M. PECK	CHECKED BY: M.J. SERVETAS
ROADWAY LAYOUT SHEET (16 OF 16)	SHEET 42 OF 230

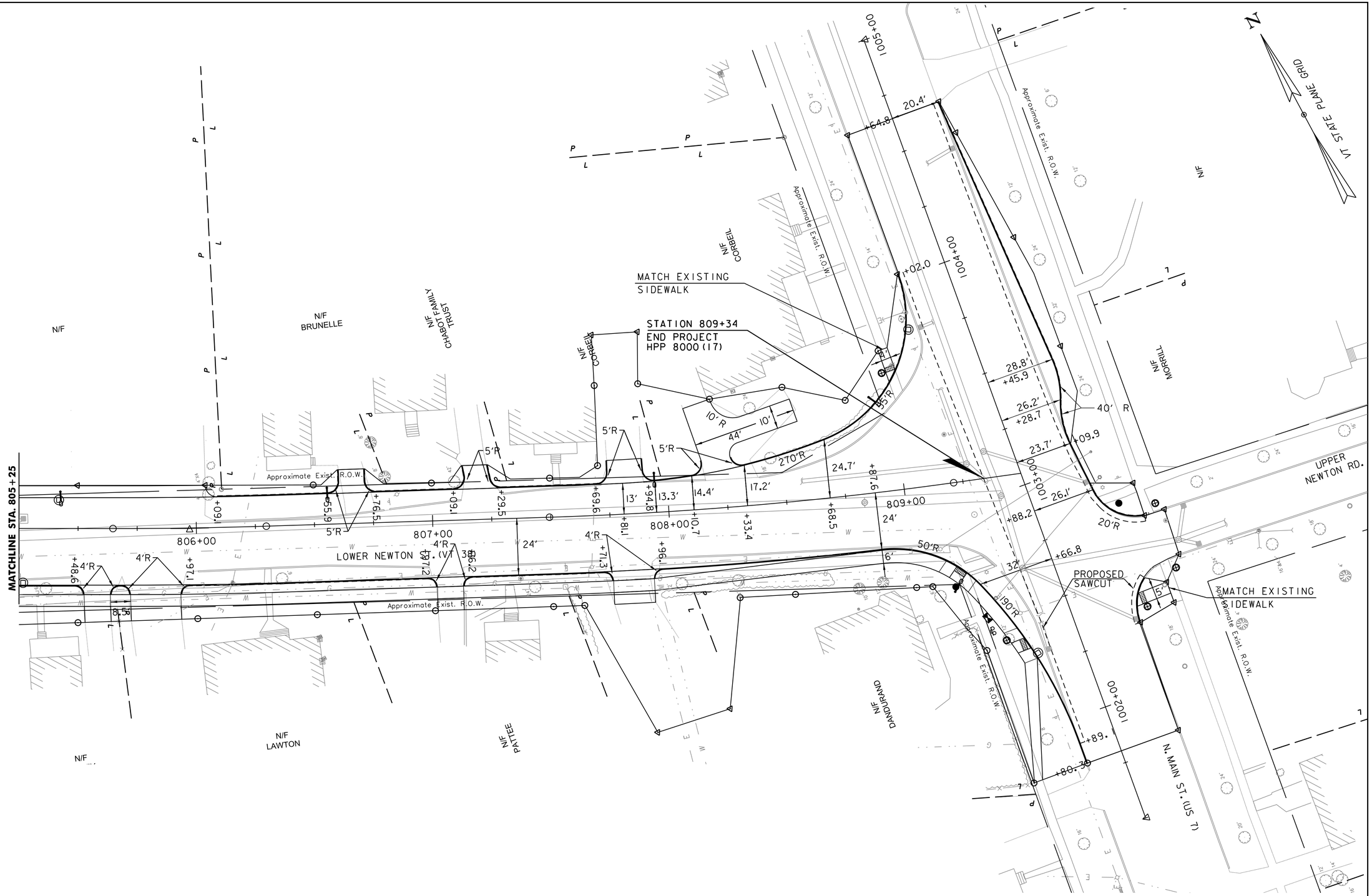

0 20 40
SCALE IN FEET

PROJECT NAME: ST. ALBANS	
PROJECT NUMBER: HPP 8000(17)	
FILE NAME: 57414_BDR_ALI_CURB.dgn	PLOT DATE: 3/4/2016
PROJECT LEADER: J. D. SALADINO	DRAWN BY: G. GOMEZ
DESIGNED BY: D. M. PECK	CHECKED BY: M.J. SERVETAS
ROADWAY LAYOUT SHEET (17 OF 16)	SHEET 43 OF 230

VHB 57414.00

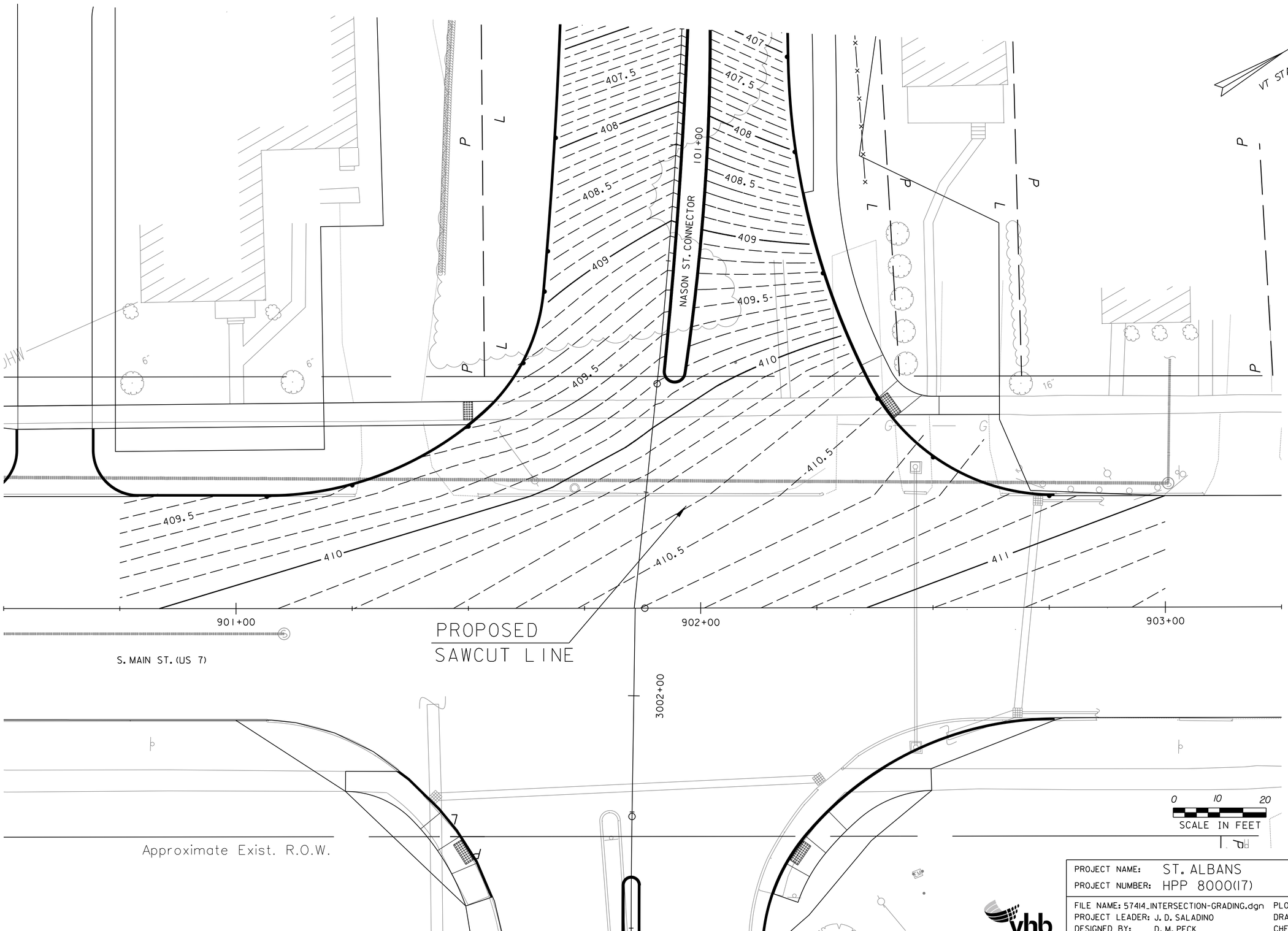

PROJECT NAME:	ST. ALBANS
PROJECT NUMBER:	HPP 8000(17)

FILE NAME: 57414_INTERSECTION-GRADING.dgn	PLOT DATE: 3/4/2016
PROJECT LEADER: J. D. SALADINO	DRAWN BY: G. GOMEZ
DESIGNED BY: D. M. PECK	CHECKED BY: M.J. SERVETAS
INTERSECTION GRADING PLAN (SHEET 1 OF 4)	SHEET 44 OF 230

VHB 57414.00

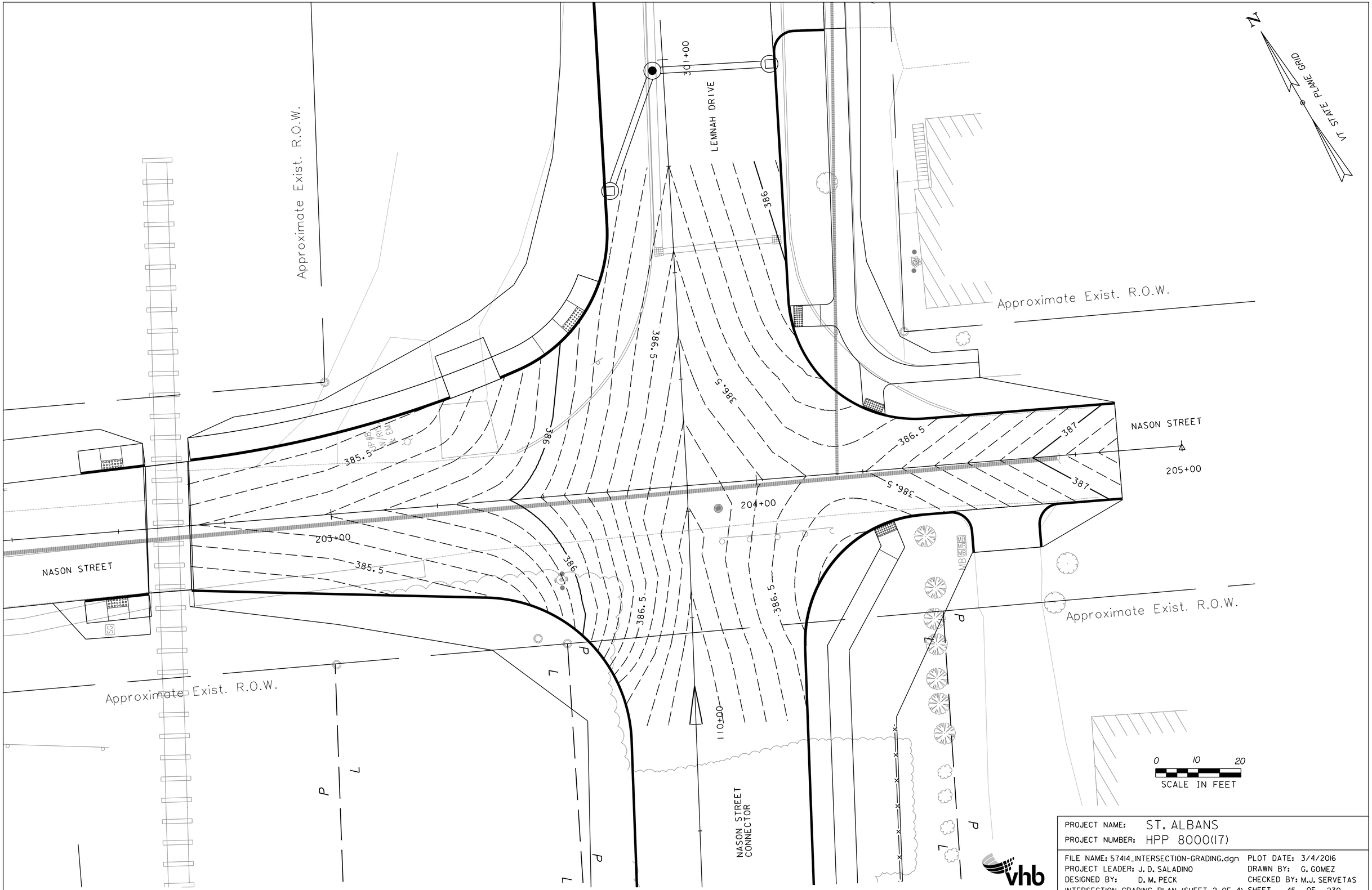

PROJECT NAME: ST. ALBANS	
PROJECT NUMBER: HPP 8000(17)	
FILE NAME: 57414_INTERSECTION-GRADING.dgn	PLOT DATE: 3/4/2016
PROJECT LEADER: J. D. SALADINO	DRAWN BY: G. GOMEZ
DESIGNED BY: D. M. PECK	CHECKED BY: M.J. SERVETAS
INTERSECTION GRADING PLAN (SHEET 2 OF 4)	SHEET 45 OF 230

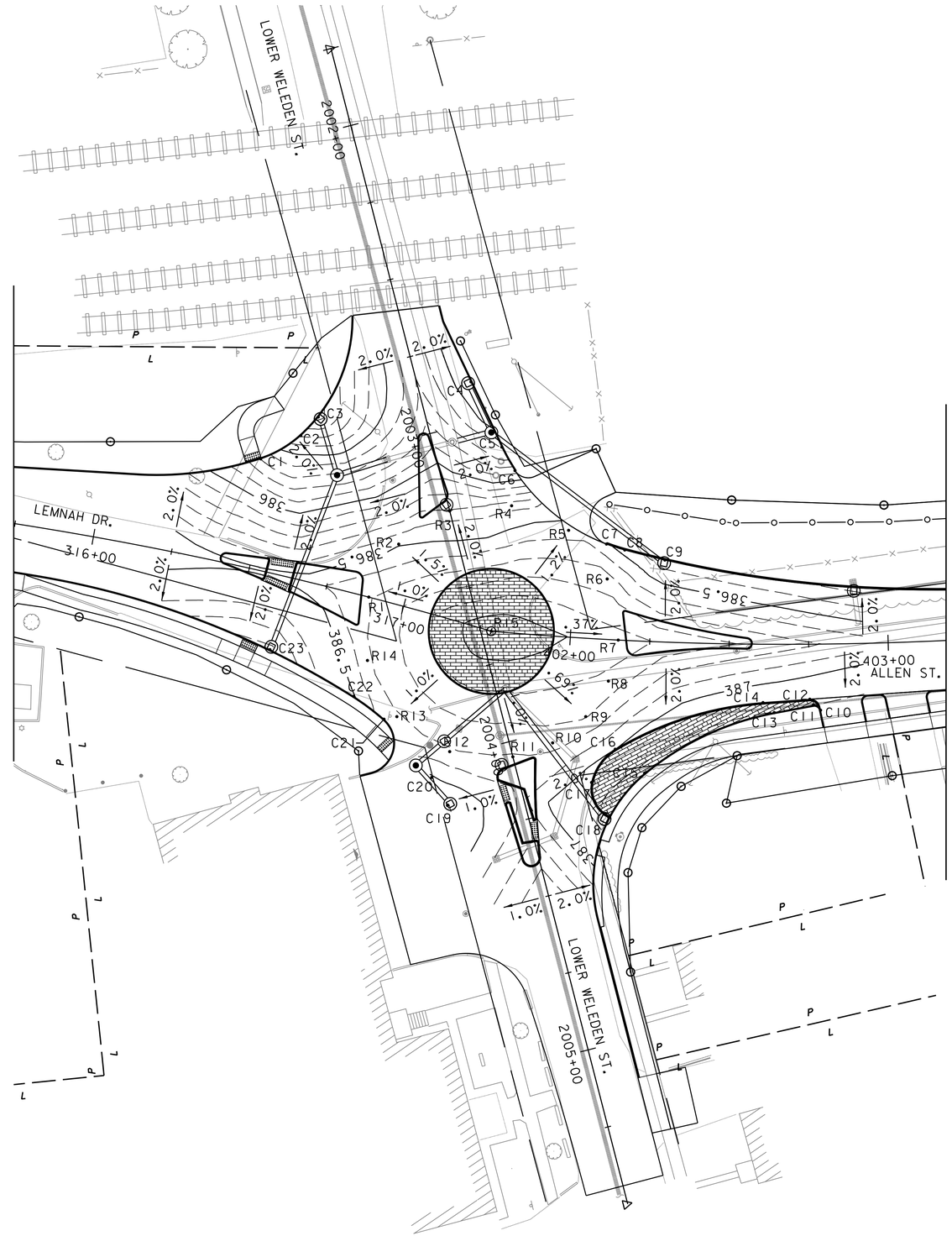

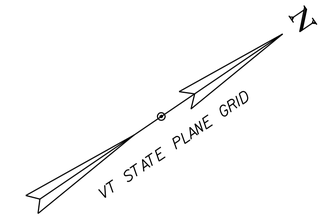

POINT	NORTHING	EASTING	STATION	OFFSET	ELEVATION	DESCRIPTION
R1	841612.42	1487816.37	316+88.66	0' CL	386.72	ROUNDABOUT
R2	841629.55	1487807.88	316+93.49	18.5' LT	386.49	ROUNDABOUT
R3	841648.67	1487808.33	2003+25.14	0' CL	386.31	ROUNDABOUT
R4	841665.70	1487817.88	2003+28.35	19.3' LT	386.35	ROUNDABOUT
R5	841676.17	1487834.35	2003+40.29	34.7' LT	386.55	ROUNDABOUT
R6	841677.61	1487853.82	402+10.58	19.0' LT	386.74	ROUNDABOUT
R7	841669.66	1487871.62	402+15.09	0' CL	386.94	ROUNDABOUT
R8	841659.86	1487880.57	402+12.67	13.0' RT	386.88	ROUNDABOUT
R9	841647.68	1487885.80	402+06.30	24.6' RT	386.81	ROUNDABOUT
R10	841634.45	1487886.76	2004+03.75	13.2' LT	386.75	ROUNDABOUT
R11	841621.64	1487883.35	2004+04.87	0' CL	386.69	ROUNDABOUT
R12	841606.13	1487870.84	2003+98.36	18.8' RT	386.69	ROUNDABOUT
R13	841598.58	1487852.40	317+07.20	34.0' RT	386.69	ROUNDABOUT
R14	841600.87	1487832.60	316+93.34	19.4' RT	386.69	ROUNDABOUT
R15	841638.21	1487846.88	401+75.05	0' CL	387.09	CENTER

POINT	NORTHING	EASTING	STATION	OFFSET	ELEVATION	DESCRIPTION
C1	841608.76	1487761.33	316+46.11	34.3' LT	385.70	CURB PCC
C2	841623.27	1487762.36	2002+90.50	39.5' RT	385.29	CURB PCC
C3	841631.11	1487760.62	2002+86.21	32.7' RT	386.06	CURB LP
C4	841677.05	1487778.49	2002+87.44	16.6' LT	385.40	CURB LP
C5	841673.52	1487800.92	2003+09.74	20.9' LT	385.59	CURB PC
C6	841672.79	1487809.35	2003+17.92	23.0' LT	385.86	DRIVE
C7	841683.59	1487844.61	402+09.72	29.9' LT	386.52	DRIVE
C8	841687.30	1487849.39	402+15.73	28.4' LT	386.46	CURB PCC
C9	841695.94	1487859.09	402+28.80	25.8' LT	386.34	CURB LP
C10	841709.87	1487925.65	402+78.52	20.8' RT	386.30	CURB PC
C11	841708.82	1487923.06	402+76.25	19.2' RT	386.30	CURB PT
C12	841709.02	1487920.91	402+75.23	17.3' RT	386.35	CURB PT
C13	841697.43	1487918.08	402+64.25	21.5' RT	386.30	CURB PC
C14	841696.26	1487913.50	402+60.76	18.4' RT	386.38	CURB PC
C15	841652.99	1487910.95	2004+20.22	38.9' LT	386.24	CURB PCC
C16	841649.60	1487899.49	2004+10.58	31.8' LT	386.50	CURB PCC
C17	841637.57	1487903.95	2004+18.86	22.0' LT	386.42	CURB PCC
C18	841635.84	1487916.14	2004+30.84	24.5' LT	386.21	CURB PT
C19	841596.04	1487884.43	2004+14.57	23.7' RT	386.39	CURB LP
C20	841596.90	1487874.36	2004+04.80	26.3' RT	386.49	PCC
C21	841594.77	1487850.79	317+03.39	35.9' RT	386.65	DRIVE
C22	841590.90	1487839.43	316+91.92	31.4' RT	386.49	CURB PCC
C23	841577.43	1487812.55	316+62.19	23.5' RT	386.07	CURB LP

0 20 40
SCALE IN FEET

vhb

PROJECT NAME: ST. ALBANS
PROJECT NUMBER: HPP 8000(17)

FILE NAME: 57414_ROUNDABOUT.dgn
PROJECT LEADER: J. D. SALADINO
DESIGNED BY: K. A. HUBERDEAU
ROUNDABOUT GRADING PLAN

PLOT DATE: 3/4/2016
DRAWN BY: K. A. HUBERDEAU
CHECKED BY: M.J. SERVETAS
SHEET 46 OF 230

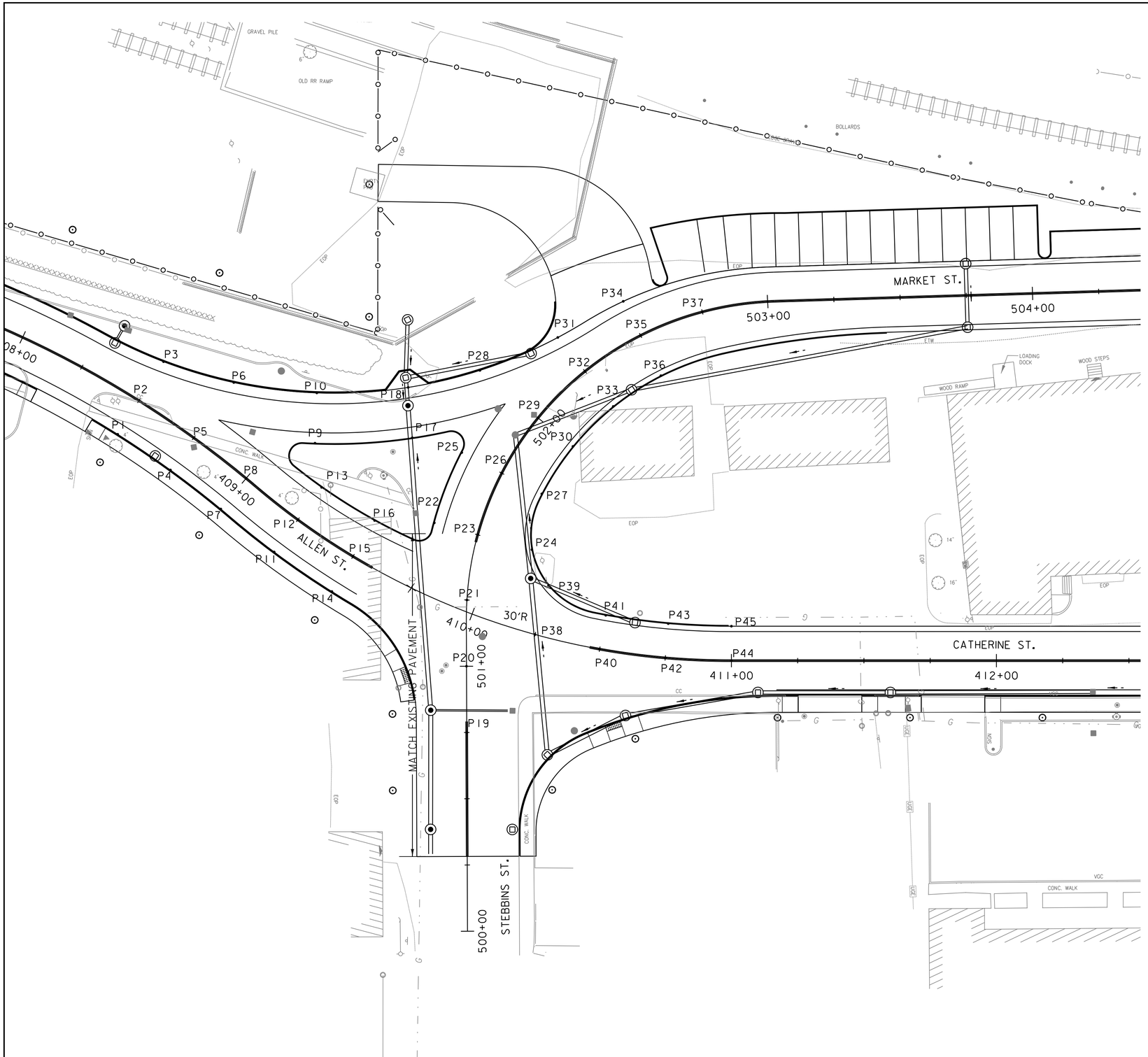

POINT	NORTHING	EASTING	STATION	OFFSET	ELEVATION
P1	842210.54	1488194.90	408+50.00	15.0' RT	385.08
P2	842220.66	1488183.83	408+50.00	0.0' CL	385.38
P3	842232.43	1488170.98	408+50.00	17.4' LT	385.04
P4	842227.74	1488211.68	408+75.00	15.0' RT	385.30
P5	842238.55	1488201.29	408+75.00	0.0' CL	385.63
P6	842257.13	1488183.44	408+75.00	25.8' LT	385.10
P7	842243.82	1488229.54	409+00.00	15.0' RT	385.55
P8	842255.28	1488219.86	409+00.00	0.0' CL	385.85
P9	842283.22	1488211.41	409+11.86	26.8' LT	385.05
P10	842287.27	1488192.85	409+00.00	41.9' LT	384.65
P11	842260.79	1488249.08	409+25.00	15.0' RT	385.70
P12	842271.72	1488238.69	409+25.00	0.0' CL	386.01
P13	842282.71	1488228.24	409+25.00	15.2' LT	385.64
P14	842279.55	1488267.63	409+50.00	15.5' LT	385.80
P15	842289.75	1488256.00	409+50.00	0.0' CL	386.10
P16	842300.18	1488244.11	409+50.00	15.8' LT	385.75
P17	842319.71	1488215.89	409+45.21	49.9' LT	384.50
P18	842321.56	1488196.93	409+30.32	64.9' LT	383.90
P19	842320.20	1488329.01	500+75.00	0.0' CL	386.61
P20	842324.55	1488304.39	501+00.00	0.0' CL	386.12
P21	842329.13	1488279.82	501+25.00	0.0' CL	385.71
P22	842322.19	1488248.97	501+50.00	17.0' LT	385.05
P23	842337.52	1488256.31	501+50.00	0.0' CL	385.38
P24	842356.63	1488265.47	501+50.00	21.2' RT	384.95
P25	842337.10	1488224.70	501+75.00	17.0' LT	384.75
P26	842350.58	1488235.05	501+75.00	0.0' CL	385.15
P27	842364.06	1488245.41	501+75.00	17.0' RT	384.72
P28	842349.34	1488195.41	502+00.00	28.4' LT	384.20
P29	842367.76	1488216.95	502+00.00	0.0' CL	385.00
P30	842378.81	1488229.88	502+00.00	17.0 RT	384.52
P31	842380.47	1488188.41	502+25.00	16.4' LT	384.42
P32	842388.31	1488202.80	502+25.00	0.0' CL	384.93
P33	842396.45	1488217.73	502+25.00	17.0' RT	384.30
P34	842407.21	1488179.36	502+50.00	14.5 LT	384.60
P35	842411.35	1488193.20	502+50.00	0.0' CL	384.95
P36	842416.22	1488209.49	502+50.00	17.0' RT	384.30
P37	842435.87	1488188.58	502+75.00	0.0' CL	385.05
P38	842352.14	1488297.20	410+25.00	0.0' CL	385.72
P39	842360.42	1488279.94	410+25.00	19.2' LT	384.95
P40	842375.14	1488306.97	410+50.00	0.0' CL	385.94
P41	842379.67	1488294.79	410+50.00	13.0' LT	385.68
P42	842398.93	1488314.62	410+75.00	0.0' CL	385.90
P43	842402.34	1488302.07	410+75.00	13.0' LT	385.50
P44	842423.32	1488320.07	411+00.00	0.0' CL	386.20
P45	842425.63	1488307.27	411+00.00	13.0' LT	385.94

PROJECT NAME: ST. ALBANS
PROJECT NUMBER: HPP 8000(17)

FILE NAME: 57414_GRADING_ALLENMARKET.dgn
PROJECT LEADER: J.D. SALADINO
DESIGNED BY: G.A. GOMEZ
INTERSECTION GRADING PLAN

PLOT DATE: 3/4/2016
DRAWN BY: G.A. GOMEZ
CHECKED BY: M.J. SERVETAS
SHEET 47 OF 230

VHB 57414.00

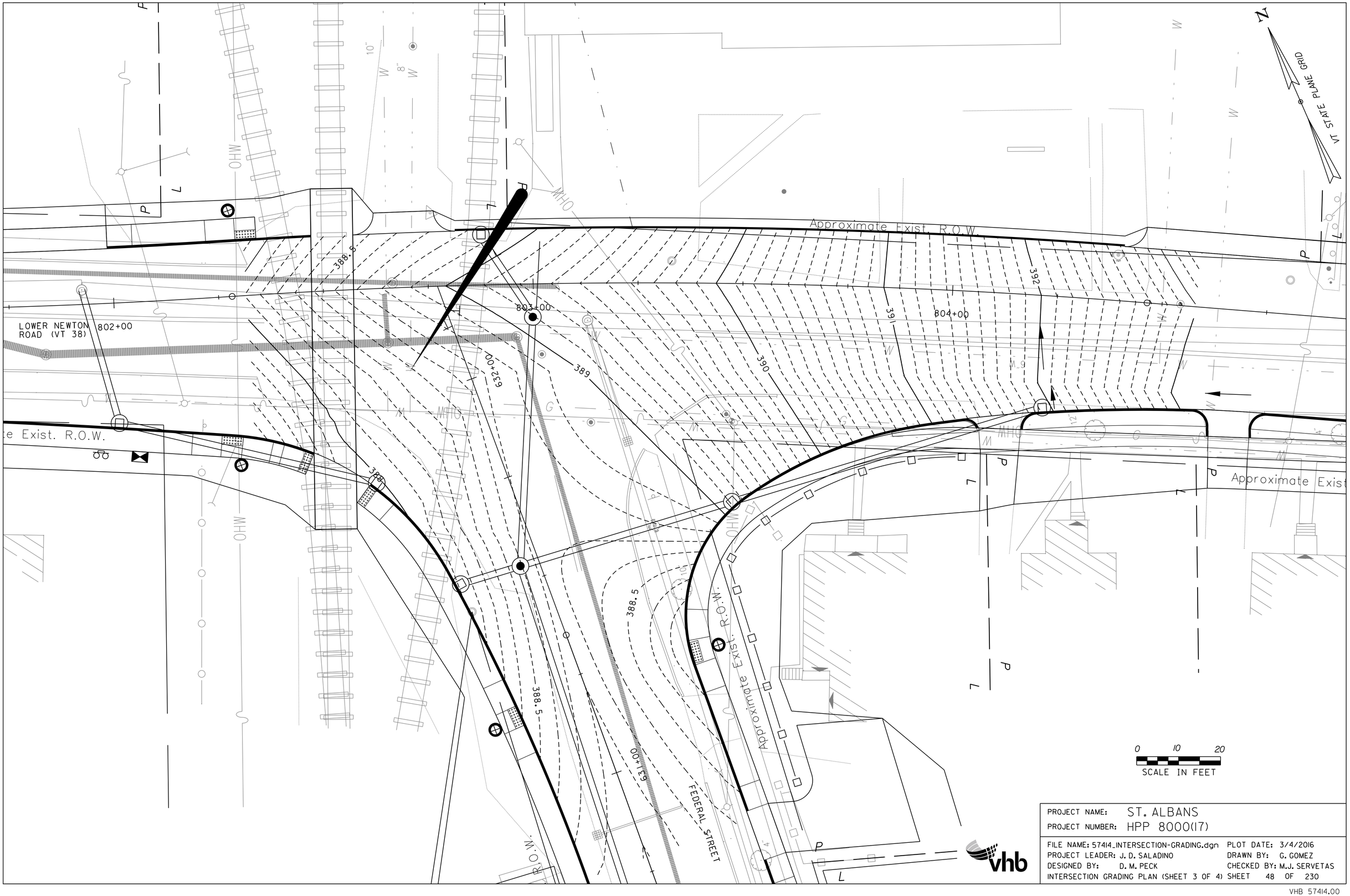

PROJECT NAME: ST. ALBANS
PROJECT NUMBER: HPP 8000(17)

FILE NAME: 57414_INTERSECTION-GRADING.dgn
PROJECT LEADER: J. D. SALADINO
DESIGNED BY: D. M. PECK
INTERSECTION GRADING PLAN (SHEET 3 OF 4)

PLOT DATE: 3/4/2016
DRAWN BY: G. GOMEZ
CHECKED BY: M.J. SERVETAS
SHEET 48 OF 230

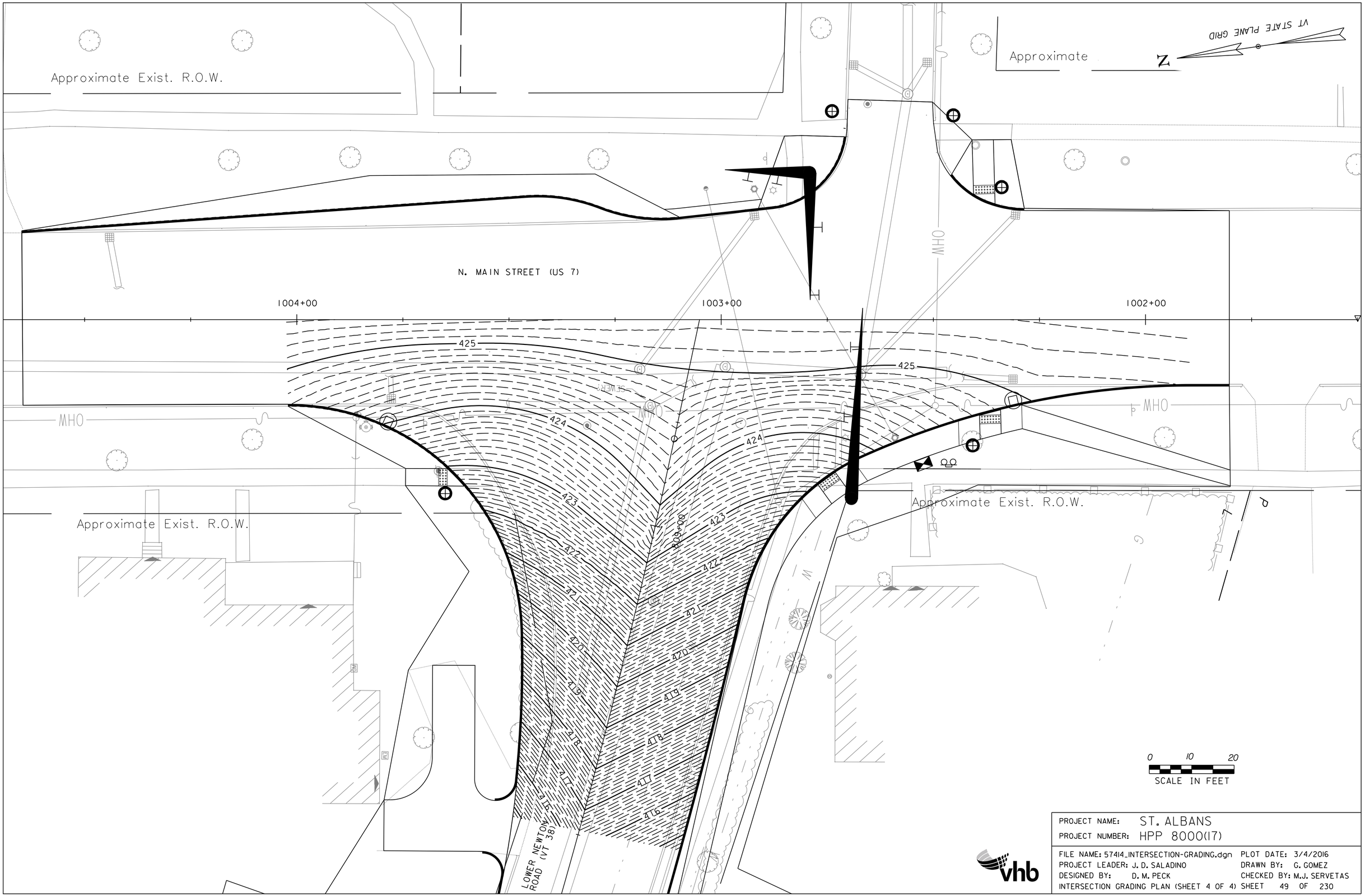

PROJECT NAME:	ST. ALBANS
PROJECT NUMBER:	HPP 8000(17)

FILE NAME: 57414_INTERSECTION-GRADING.dgn	PLOT DATE: 3/4/2016
PROJECT LEADER: J. D. SALADINO	DRAWN BY: G. GOMEZ
DESIGNED BY: D. M. PECK	CHECKED BY: M.J. SERVETAS
INTERSECTION GRADING PLAN (SHEET 4 OF 4)	SHEET 49 OF 230

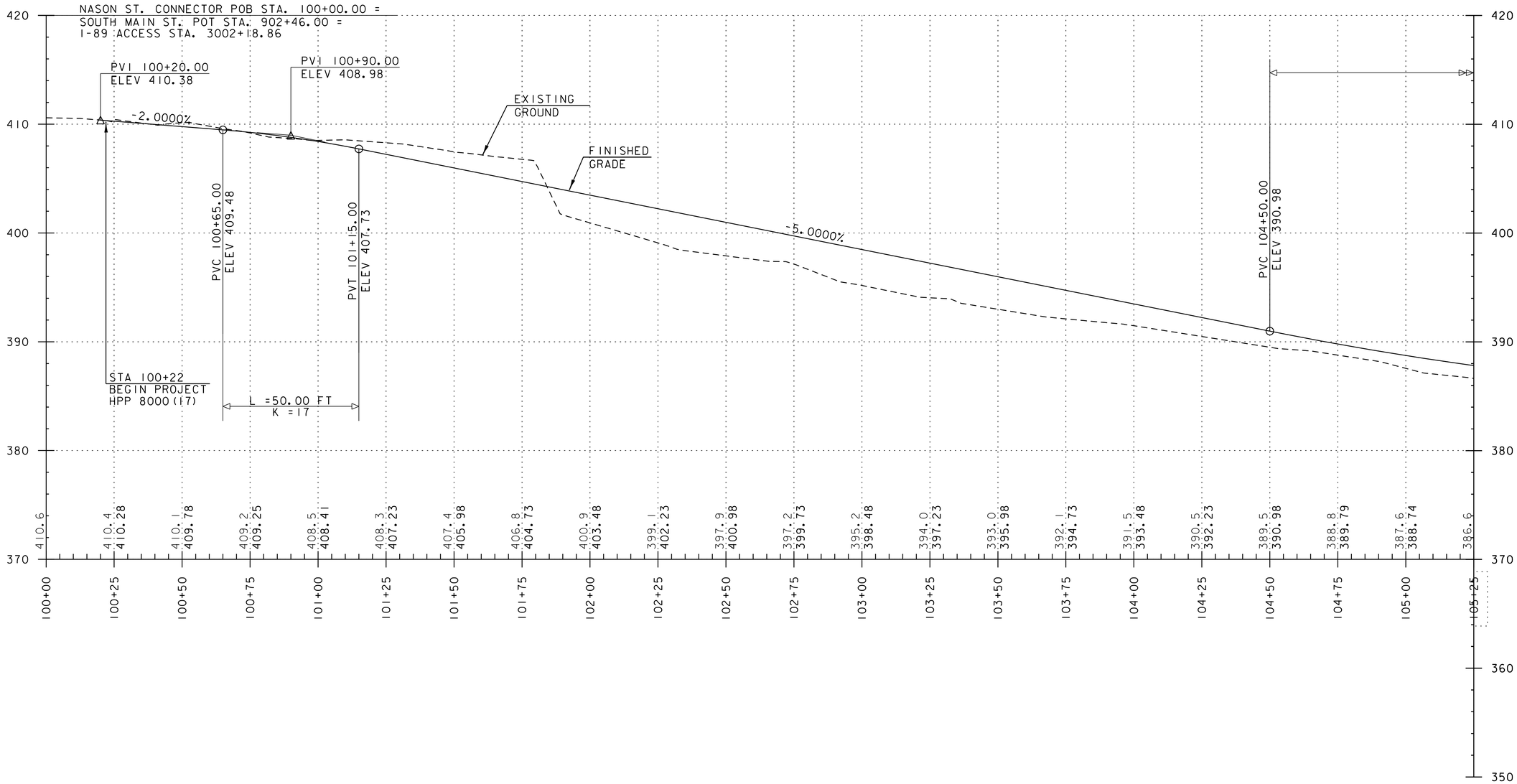

NOTE:

GRADES SHOWN TO THE NEAREST TENTH REPRESENT EXISTING GROUND ELEVATION ALONG THE CENTERLINE.
GRADES SHOWN TO THE NEAREST HUNDRETH REPRESENT FINISH GRADE ELEVATION ALONG THE CENTERLINE.

PROJECT NAME: ST. ALBANS	
PROJECT NUMBER: HPP 8000(17)	
FILE NAME: 57414_PRO.dgn	PLOT DATE: 3/4/2016
PROJECT LEADER: M.A. COLGAN	DRAWN BY: G. GOMEZ
DESIGNED BY: D.M. PECK	CHECKED BY: M.J. SERVETAS
NASON CONNECTOR PROFILE SHEET (1 OF 2)	SHEET 50 OF 230

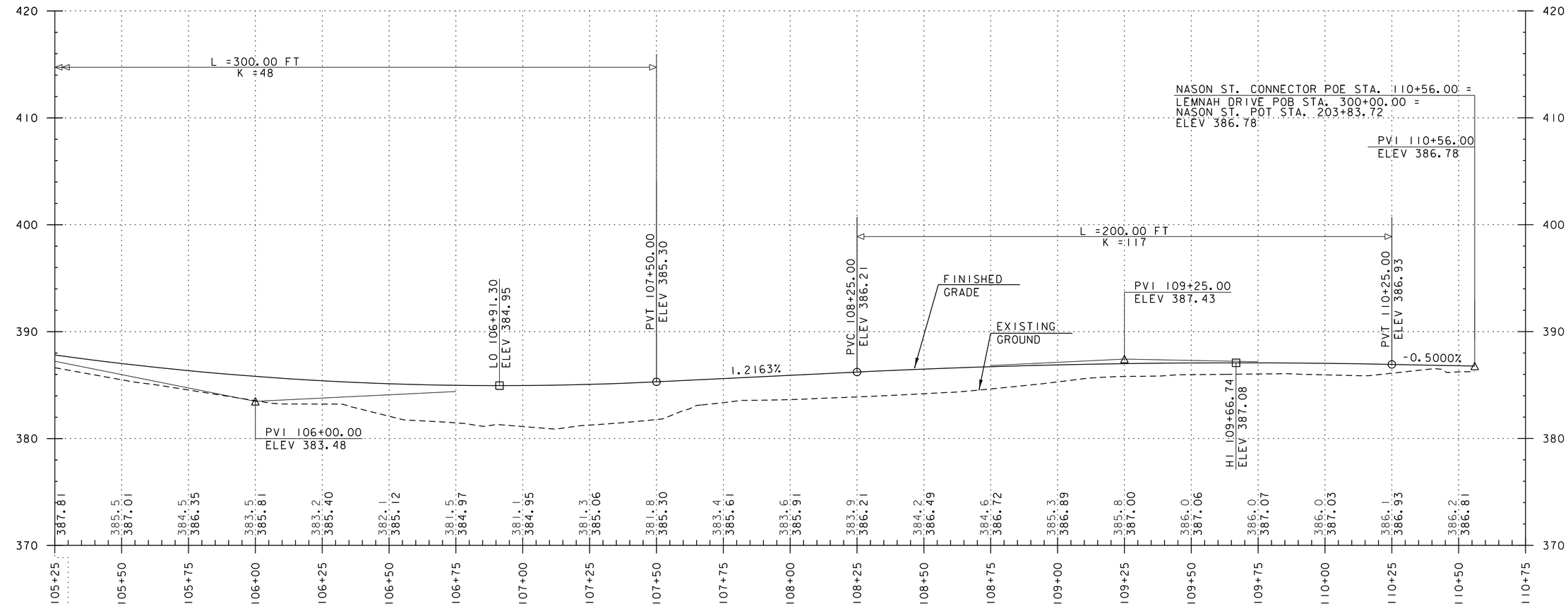

BANKING DIAGRAM

NOTE:

GRADES SHOWN TO THE NEAREST TENTH REPRESENT EXISTING GROUND ELEVATION ALONG THE CENTERLINE.
GRADES SHOWN TO THE NEAREST HUNDRETH REPRESENT FINISH GRADE ELEVATION ALONG THE CENTERLINE.

PROJECT NAME: ST. ALBANS	
PROJECT NUMBER: HPP 8000(17)	
FILE NAME: 57414_PRO.dgn	PLOT DATE: 3/4/2016
PROJECT LEADER: M.A. COLGAN	DRAWN BY: G. GOMEZ
DESIGNED BY: D.M. PECK	CHECKED BY: M.J. SERVETAS
NASON CONNECTOR PROFILE SHEET (2 OF 2)	SHEET 51 OF 230

VHB 57414.00

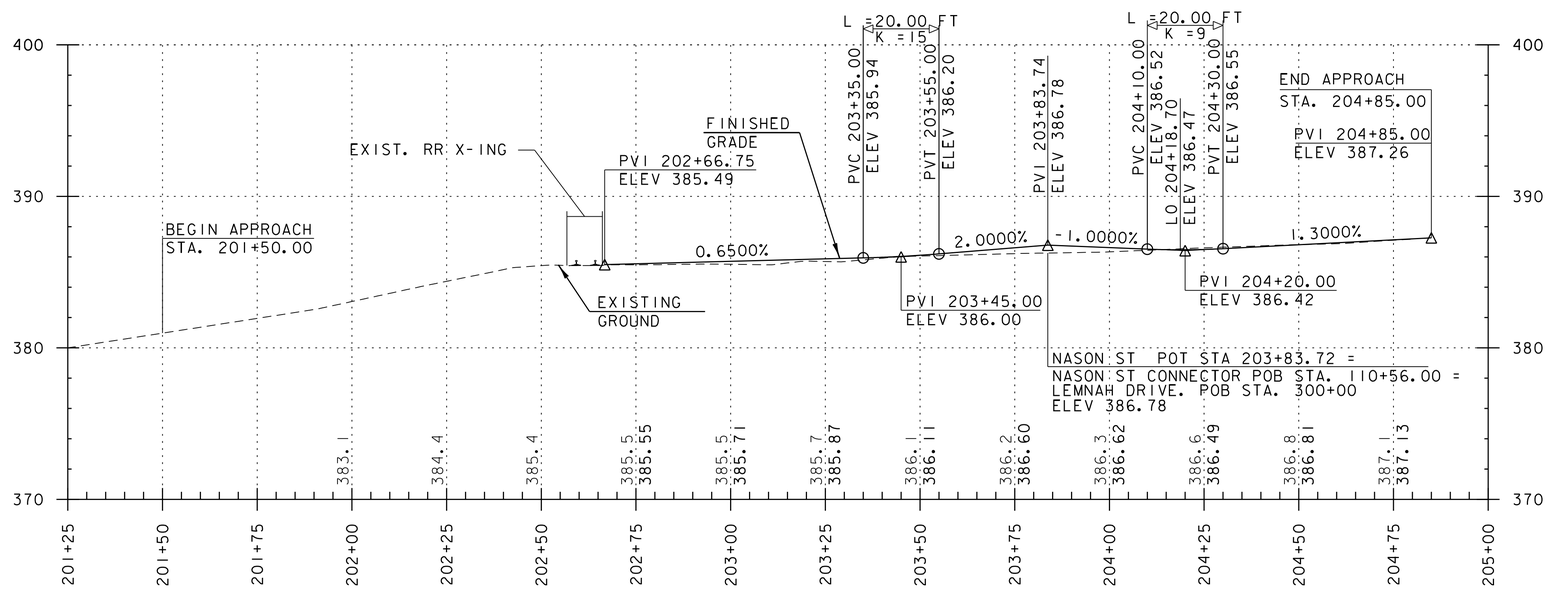

NOTE:

GRADES SHOWN TO THE NEAREST TENTH REPRESENT EXISTING GROUND ELEVATION ALONG THE CENTERLINE.
GRADES SHOWN TO THE NEAREST HUNDRETH REPRESENT FINISH GRADE ELEVATION ALONG THE CENTERLINE.

PROJECT NAME: ST. ALBANS	
PROJECT NUMBER: HPP 8000(17)	
FILE NAME: 57414_PRO.dgn	PLOT DATE: 3/4/2016
PROJECT LEADER: M.A. COLGAN	DRAWN BY: G. GOMEZ
DESIGNED BY: D.M. PECK	CHECKED BY: M.J. SERVETAS
NASON STREET PROFILE SHEET	SHEET 52 OF 230

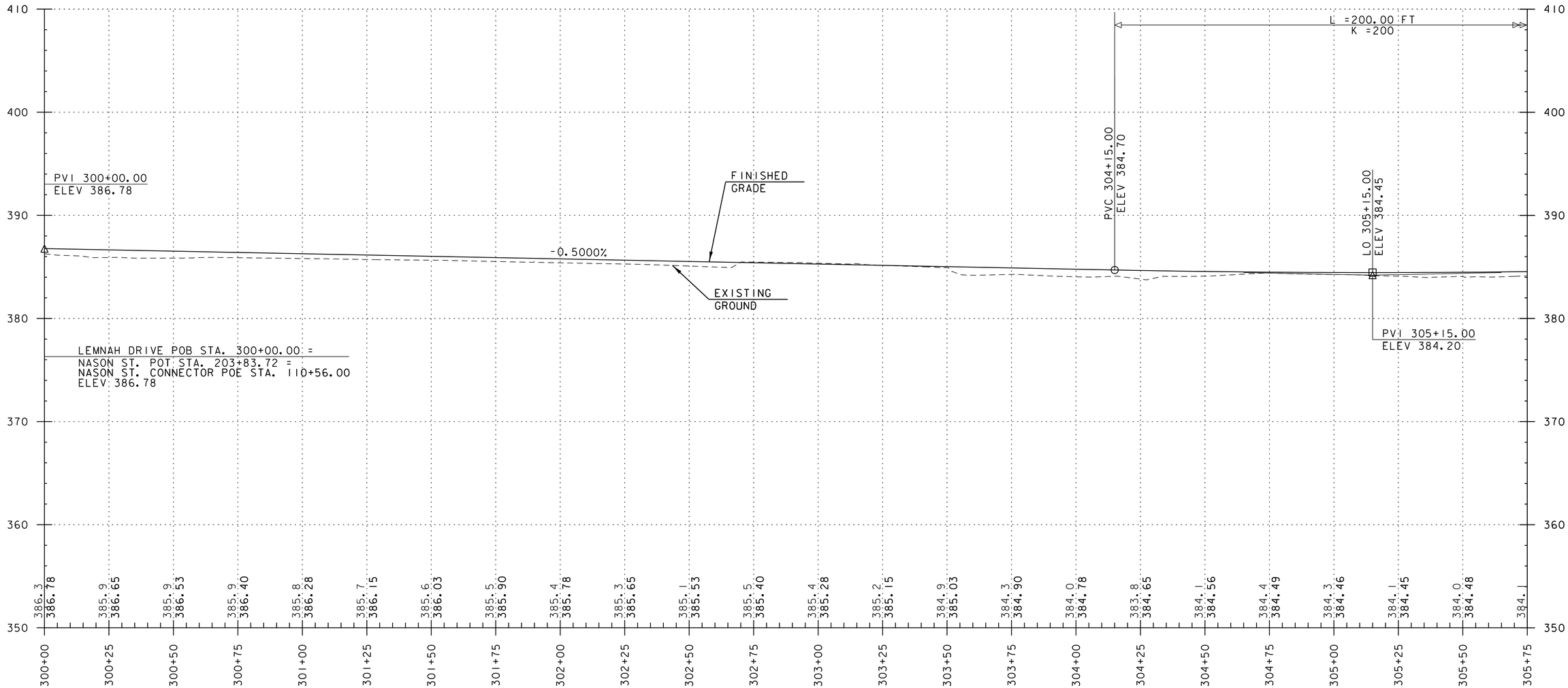

NOTE:

GRADES SHOWN TO THE NEAREST TENTH REPRESENT EXISTING GROUND ELEVATION ALONG THE CENTERLINE.
GRADES SHOWN TO THE NEAREST HUNDRETH REPRESENT FINISH GRADE ELEVATION ALONG THE CENTERLINE.

vhb

PROJECT NAME: ST. ALBANS	
PROJECT NUMBER: HPP 8000(17)	
FILE NAME: 57414_PRO.dgn	PLOT DATE: 3/4/2016
PROJECT LEADER: M.A. COLGAN	DRAWN BY: G. GOMEZ
DESIGNED BY: D.M. PECK	CHECKED BY: M.J. SERVETAS
LEMNAH DRIVE PROFILE SHEET (1 OF 3)	SHEET 53 OF 230

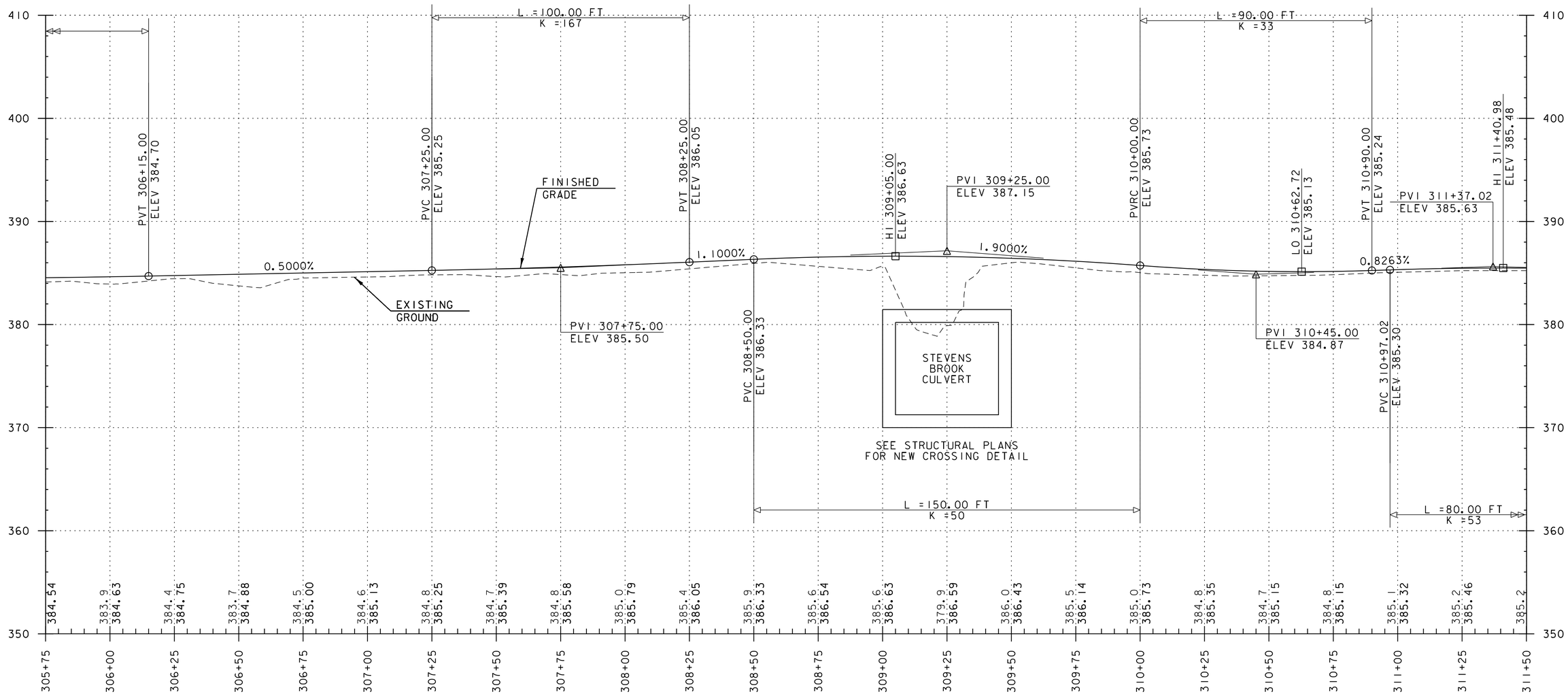

NOTE:

GRADES SHOWN TO THE NEAREST TENTH REPRESENT EXISTING GROUND ELEVATION ALONG THE CENTERLINE.
GRADES SHOWN TO THE NEAREST HUNDRETH REPRESENT FINISH GRADE ELEVATION ALONG THE CENTERLINE.

PROJECT NAME: ST. ALBANS	
PROJECT NUMBER: HPP 8000(17)	
FILE NAME: 57414_PRO.dgn	PLOT DATE: 3/4/2016
PROJECT LEADER: M.A. COLGAN	DRAWN BY: G. GOMEZ
DESIGNED BY: D.M. PECK	CHECKED BY: M.J. SERVETAS
LEMNAH DRIVE PROFILE SHEET (2 OF 3)	SHEET 54 OF 230

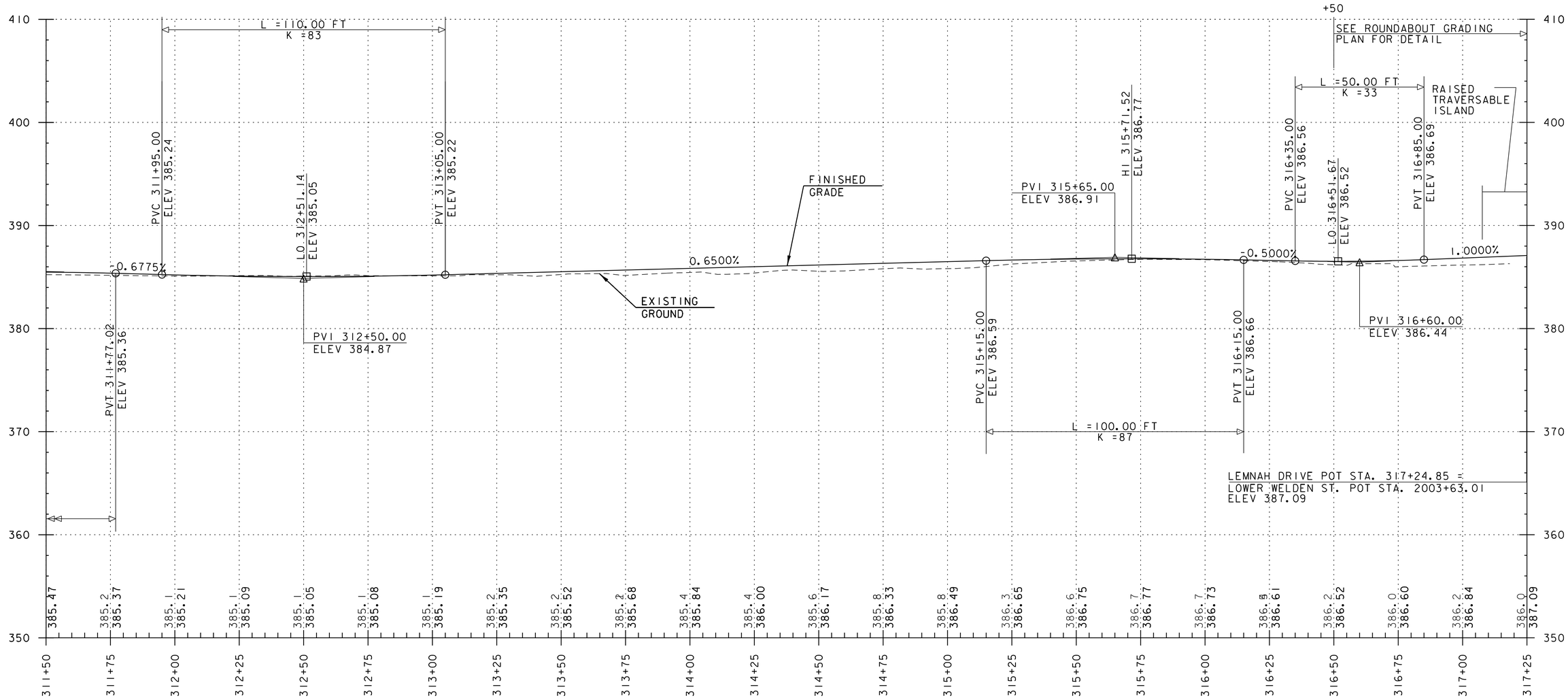

NOTE:

GRADES SHOWN TO THE NEAREST TENTH REPRESENT EXISTING GROUND ELEVATION ALONG THE CENTERLINE.
GRADES SHOWN TO THE NEAREST HUNDRETH REPRESENT FINISH GRADE ELEVATION ALONG THE CENTERLINE.

PROJECT NAME: ST. ALBANS	
PROJECT NUMBER: HPP 8000(17)	
FILE NAME: 57414_PRO.dgn	PLOT DATE: 3/4/2016
PROJECT LEADER: M.A. COLGAN	DRAWN BY: G. GOMEZ
DESIGNED BY: D.M. PECK	CHECKED BY: M.J. SERVETAS
LEMNAH DRIVE PROFILE SHEET (3 OF 3)	SHEET 55 OF 230

VHB 57414.00

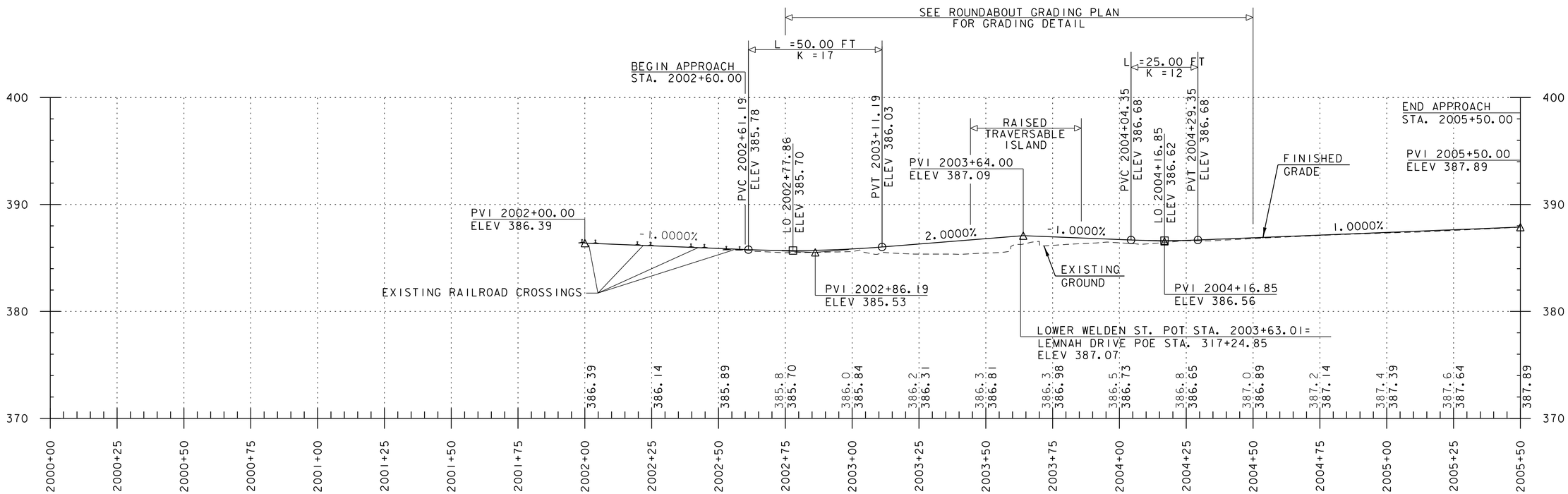

NOTE:

GRADES SHOWN TO THE NEAREST TENTH REPRESENT EXISTING GROUND ELEVATION ALONG THE CENTERLINE.
GRADES SHOWN TO THE NEAREST HUNDRETH REPRESENT FINISH GRADE ELEVATION ALONG THE CENTERLINE.

PROJECT NAME: ST. ALBANS	
PROJECT NUMBER: HPP 8000(17)	
FILE NAME: 57414_PRO.dgn	PLOT DATE: 3/4/2016
PROJECT LEADER: M.A. COLGAN	DRAWN BY: G. GOMEZ
DESIGNED BY: D.M. PECK	CHECKED BY: M.J. SERVETAS
LOWER WELDEN STREET PROFILE SHEET	SHEET 56 OF 230

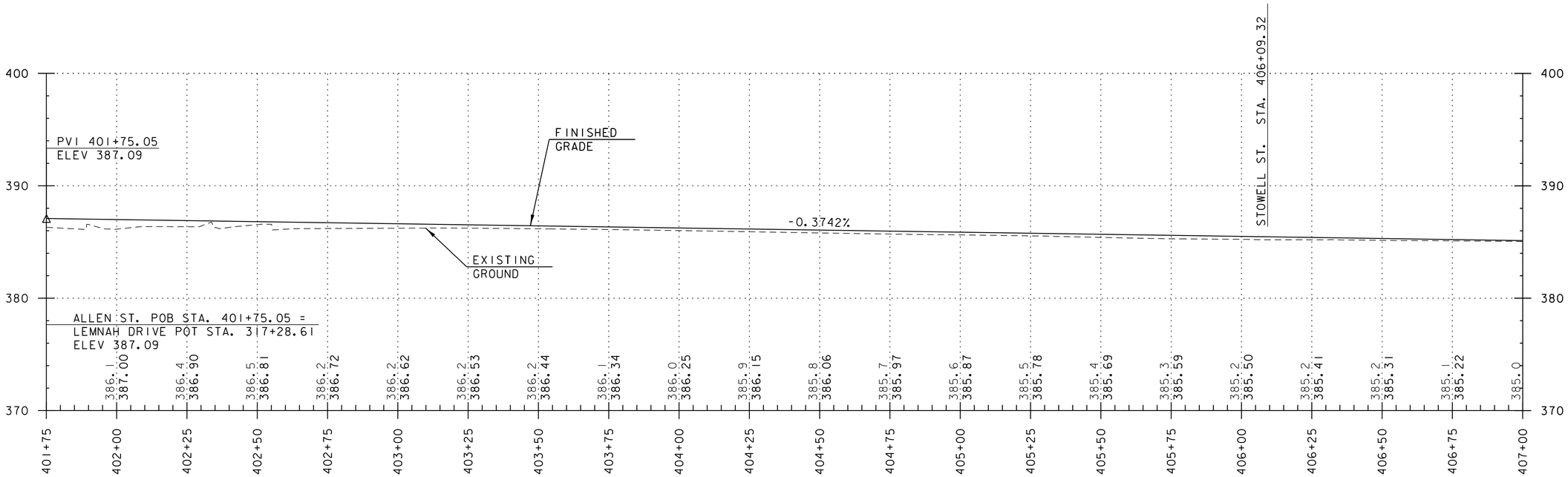

NOTE:

GRADES SHOWN TO THE NEAREST TENTH REPRESENT EXISTING GROUND ELEVATION ALONG THE CENTERLINE.
GRADES SHOWN TO THE NEAREST HUNDRETH REPRESENT FINISH GRADE ELEVATION ALONG THE CENTERLINE.

PROJECT NAME: ST. ALBANS	
PROJECT NUMBER: HPP 8000(17)	
FILE NAME: 57414_PRO.dgn	PLOT DATE: 3/4/2016
PROJECT LEADER: M.A. COLGAN	DRAWN BY: G. GOMEZ
DESIGNED BY: D.M. PECK	CHECKED BY: M.J. SERVETAS
ALLEN-CATHERINE PROFILE SHEET (1 OF 3)	SHEET 57 OF 230

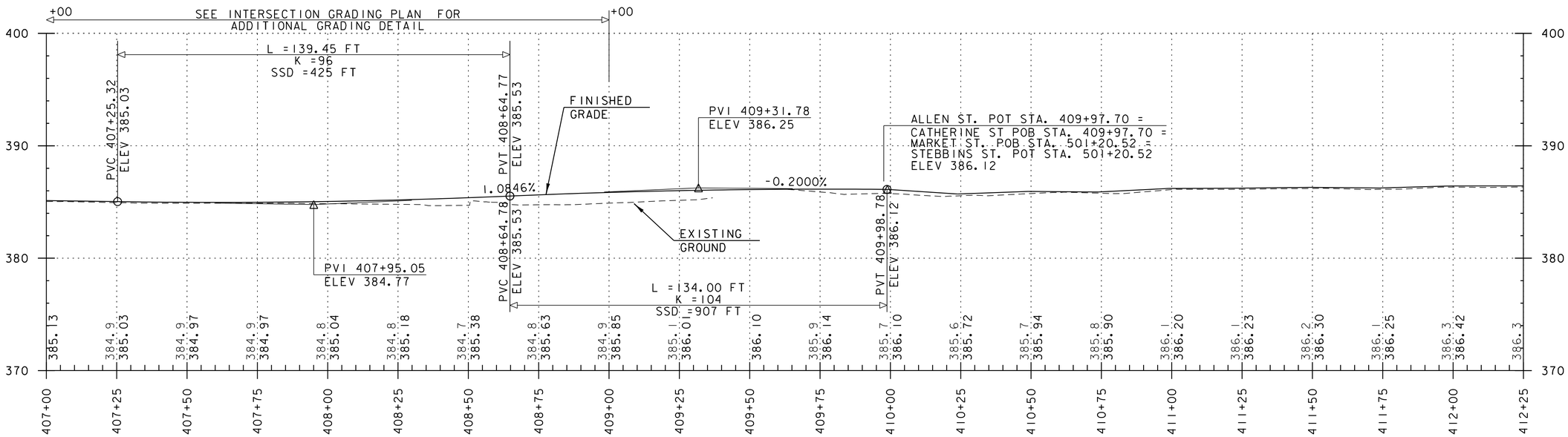

NOTE:

GRADES SHOWN TO THE NEAREST TENTH REPRESENT EXISTING GROUND ELEVATION ALONG THE CENTERLINE.
GRADES SHOWN TO THE NEAREST HUNDRETH REPRESENT FINISH GRADE ELEVATION ALONG THE CENTERLINE.

PROJECT NAME: ST. ALBANS	
PROJECT NUMBER: HPP 8000(17)	
FILE NAME: 57414_PRO.dgn	PLOT DATE: 3/4/2016
PROJECT LEADER: M.A. COLGAN	DRAWN BY: G. GOMEZ
DESIGNED BY: D.M. PECK	CHECKED BY: M.J. SERVETAS
ALLEN-CATHERINE PROFILE SHEET (2 OF 3)	SHEET 58 OF 230

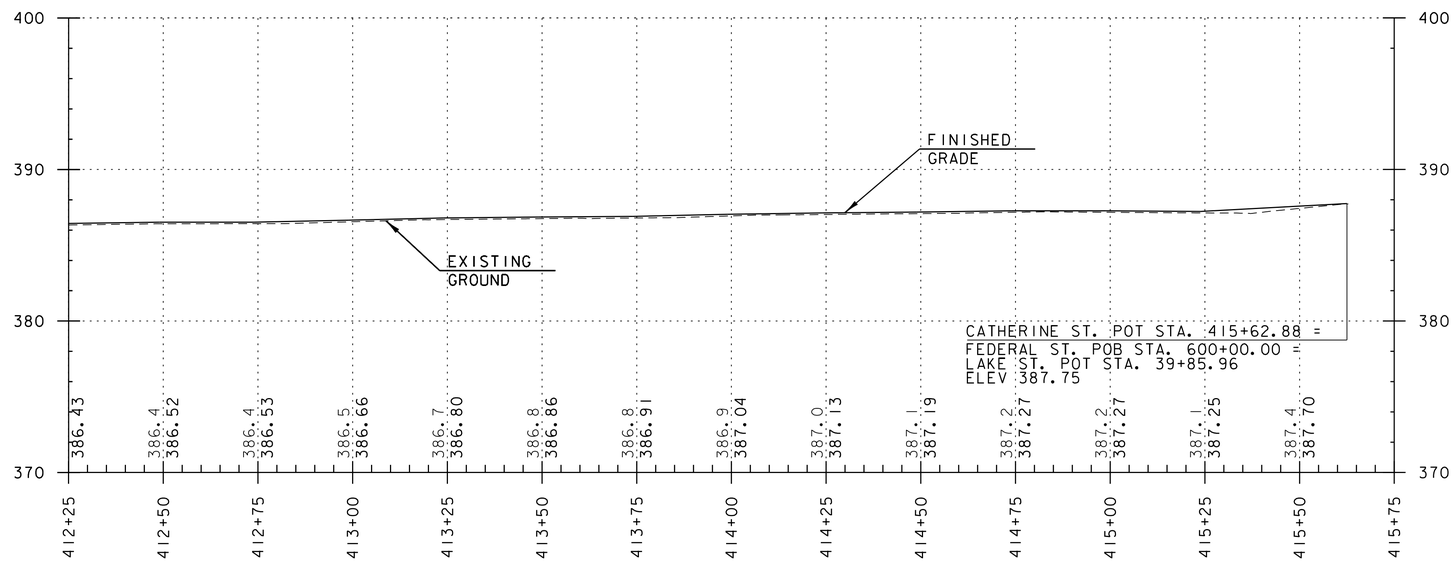

NOTE:

GRADES SHOWN TO THE NEAREST TENTH REPRESENT EXISTING GROUND ELEVATION ALONG THE CENTERLINE.
GRADES SHOWN TO THE NEAREST HUNDRETH REPRESENT FINISH GRADE ELEVATION ALONG THE CENTERLINE.

PROJECT NAME: ST. ALBANS	
PROJECT NUMBER: HPP 8000(17)	
FILE NAME: 57414_PRO.dgn	PLOT DATE: 3/4/2016
PROJECT LEADER: M.A. COLGAN	DRAWN BY: G. GOMEZ
DESIGNED BY: D.M. PECK	CHECKED BY: M.J. SERVETAS
ALLEN-CATHERINE PROFILE SHEET (3 OF 3)	SHEET 59 OF 230

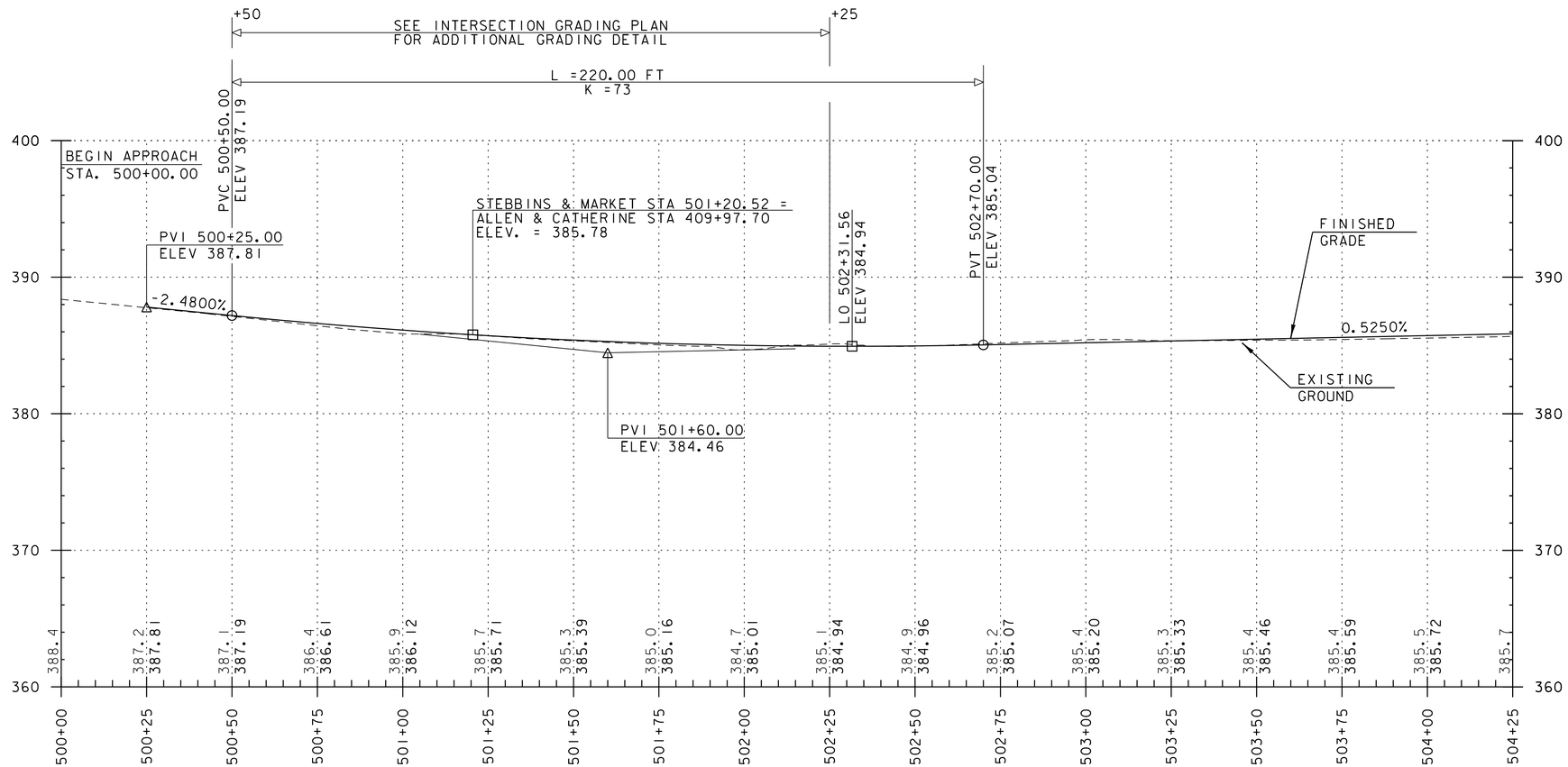

NOTE:

GRADES SHOWN TO THE NEAREST TENTH REPRESENT EXISTING GROUND ELEVATION ALONG THE CENTERLINE.
GRADES SHOWN TO THE NEAREST HUNDRETH REPRESENT FINISH GRADE ELEVATION ALONG THE CENTERLINE.

PROJECT NAME: ST. ALBANS	
PROJECT NUMBER: HPP 8000(17)	
FILE NAME: 57414_PRO.dgn	PLOT DATE: 3/4/2016
PROJECT LEADER: M.A. COLGAN	DRAWN BY: G. GOMEZ
DESIGNED BY: D.M. PECK	CHECKED BY: M.J. SERVETAS
STEBBINS-MARKET PROFILE (SHEET 1 OF 2)	SHEET 60 OF 230

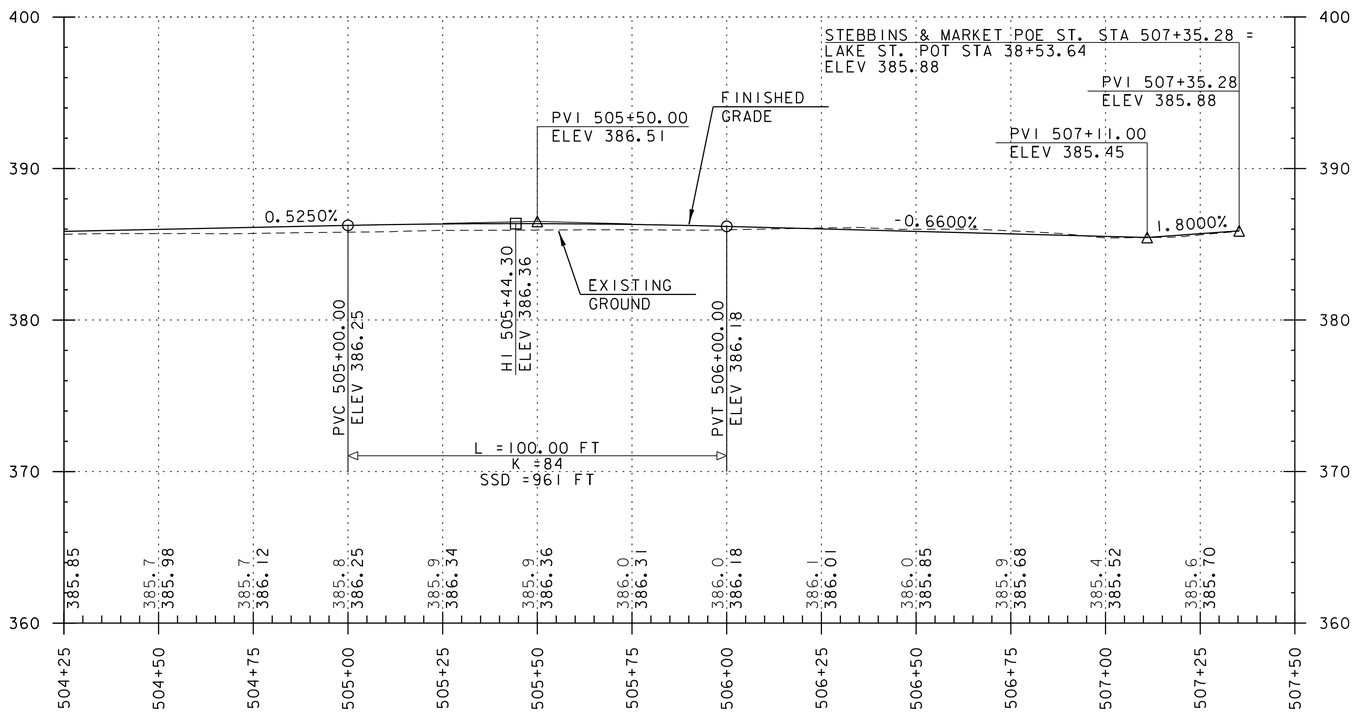

NOTE:

GRADES SHOWN TO THE NEAREST TENTH REPRESENT EXISTING GROUND ELEVATION ALONG THE CENTERLINE.
GRADES SHOWN TO THE NEAREST HUNDRETH REPRESENT FINISH GRADE ELEVATION ALONG THE CENTERLINE.

PROJECT NAME: ST. ALBANS	
PROJECT NUMBER: HPP 8000(17)	
FILE NAME: 57414_PRO.dgn	PLOT DATE: 3/4/2016
PROJECT LEADER: M.A. COLGAN	DRAWN BY: G. GOMEZ
DESIGNED BY: D.M. PECK	CHECKED BY: M.J. SERVETAS
STEBBINS-MARKET PROFILE (SHEET 2 OF 2)	SHEET 61 OF 230

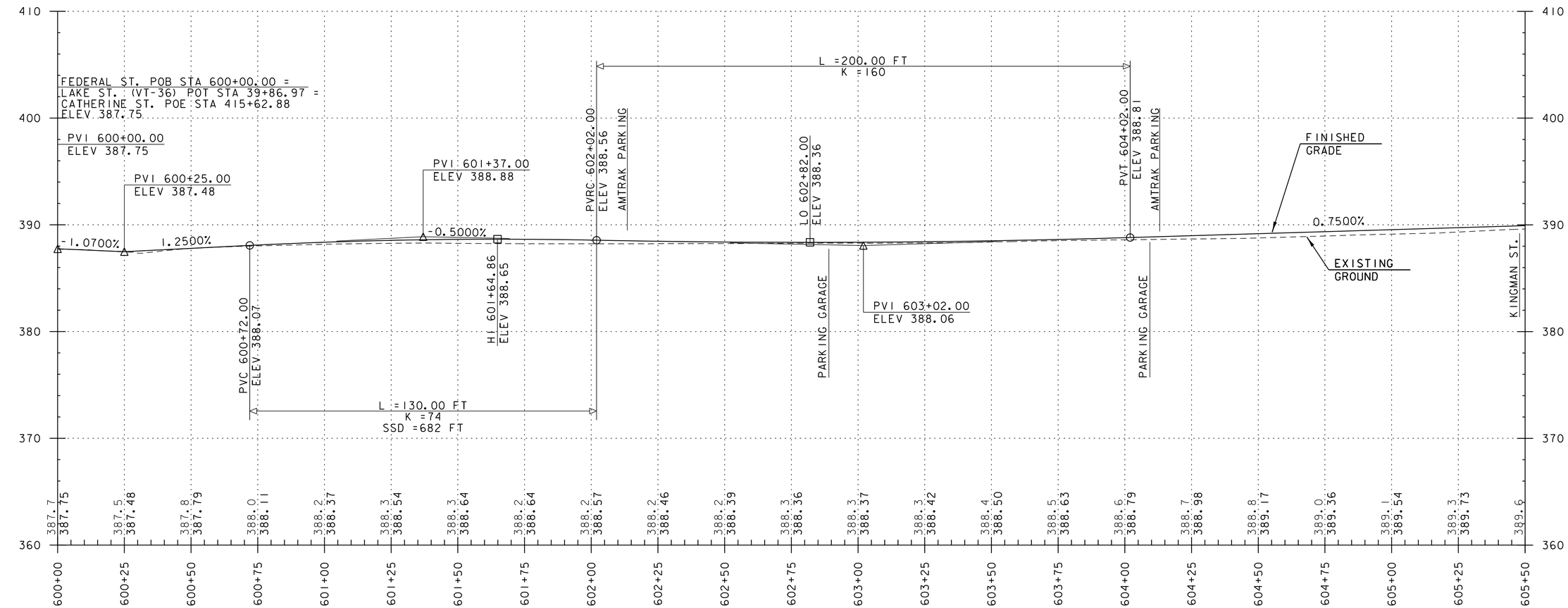

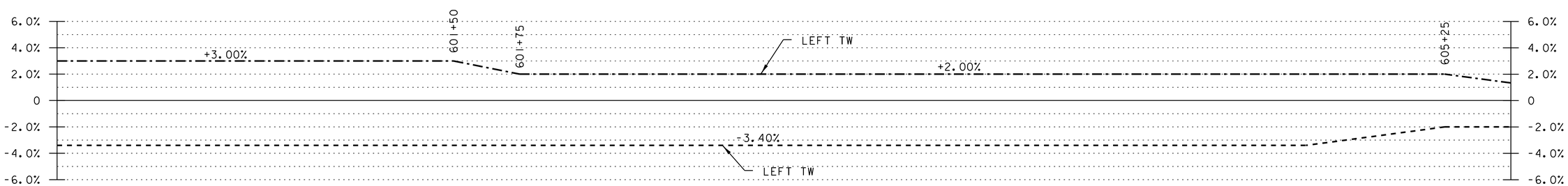

BANKING DIAGRAM

NOTE:

GRADES SHOWN TO THE NEAREST TENTH REPRESENT EXISTING GROUND ELEVATION ALONG THE CENTERLINE.
GRADES SHOWN TO THE NEAREST HUNDRETH REPRESENT FINISH GRADE ELEVATION ALONG THE CENTERLINE.

PROJECT NAME: ST. ALBANS	
PROJECT NUMBER: HPP 8000(17)	
FILE NAME: 57414_PRO.dgn	PLOT DATE: 3/4/2016
PROJECT LEADER: M.A. COLGAN	DRAWN BY: G. GOMEZ
DESIGNED BY: D.M. PECK	CHECKED BY: M.J. SERVETAS
FEDERAL STREET PROFILE (SHEET 1 OF 6)	SHEET 62 OF 230

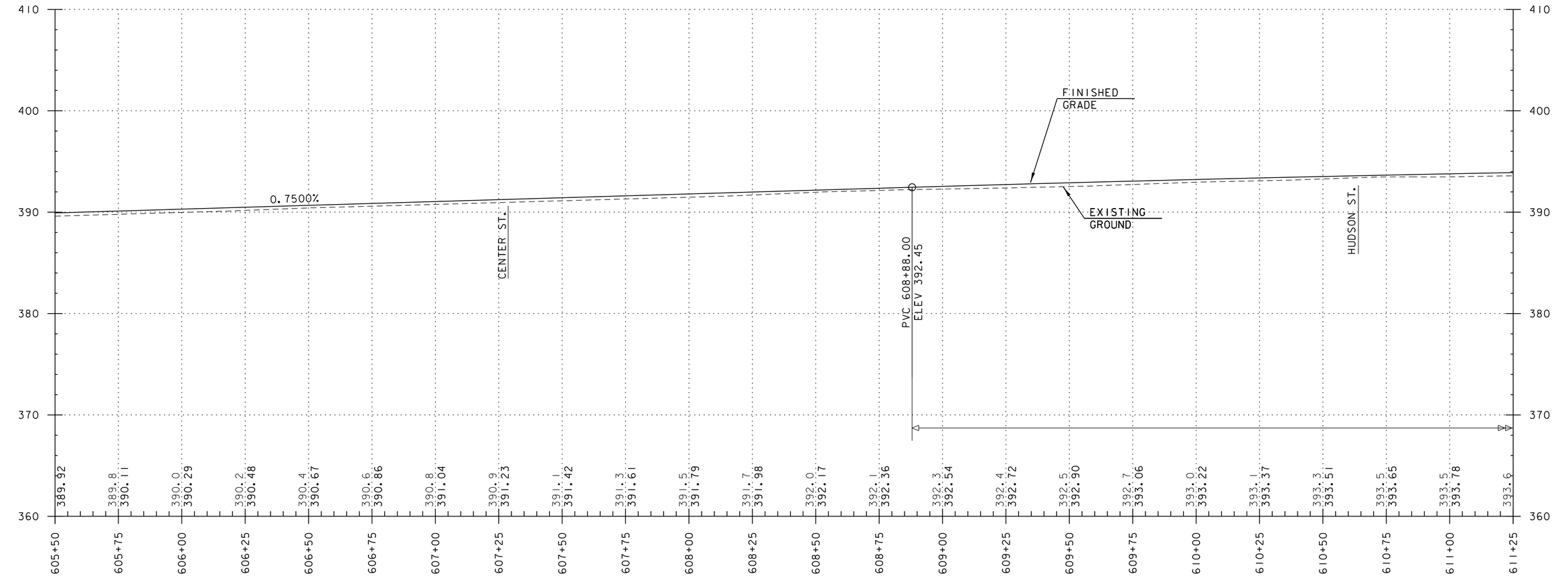

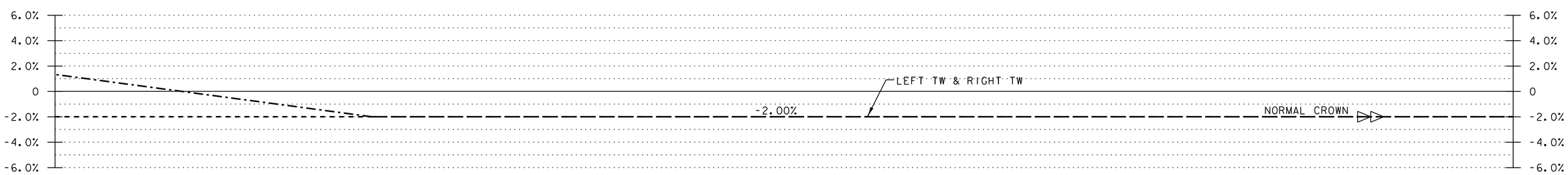

BANKING DIAGRAM

NOTE:

GRADES SHOWN TO THE NEAREST TENTH REPRESENT EXISTING GROUND ELEVATION ALONG THE CENTERLINE.
GRADES SHOWN TO THE NEAREST HUNDRETH REPRESENT FINISH GRADE ELEVATION ALONG THE CENTERLINE.

PROJECT NAME: ST. ALBANS	
PROJECT NUMBER: HPP 8000(17)	
FILE NAME: 57414_PRO.dgn	PLOT DATE: 3/4/2016
PROJECT LEADER: M.A. COLGAN	DRAWN BY: G. GOMEZ
DESIGNED BY: D.M. PECK	CHECKED BY: M.J. SERVETAS
FEDERAL STREET PROFILE (SHEET 2 OF 6)	SHEET 63 OF 230

VHB 57414.00

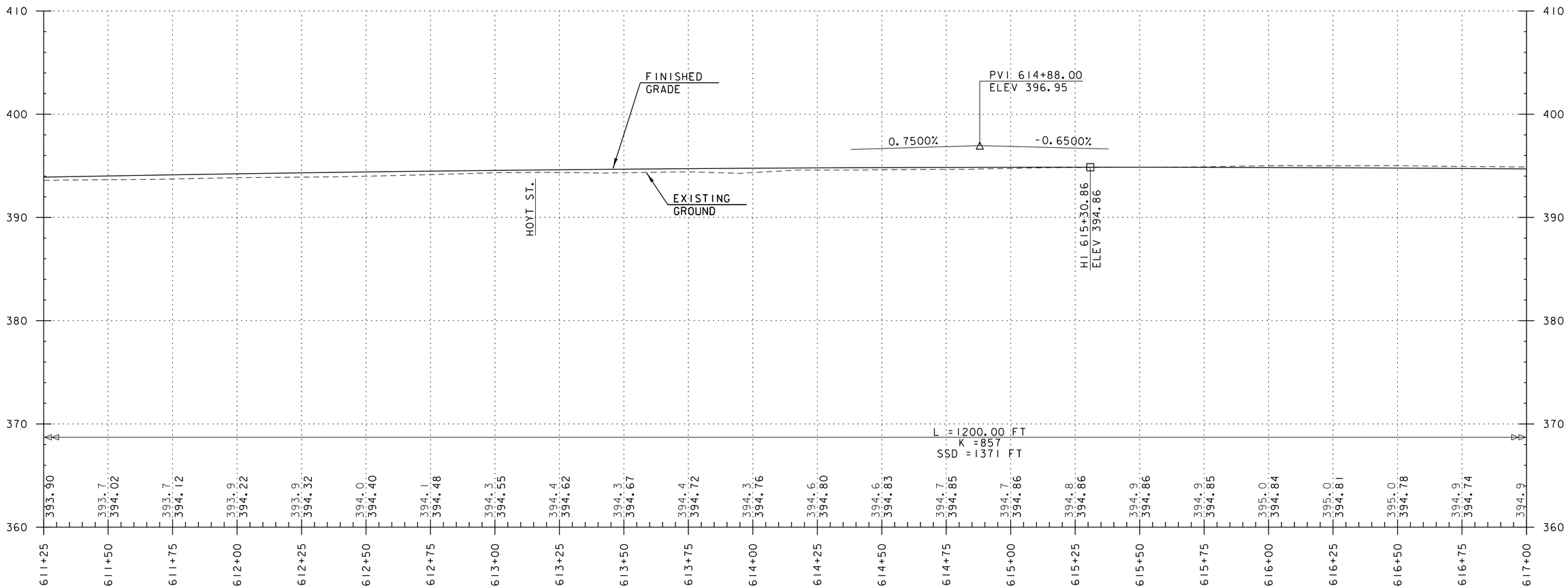

NOTE:

GRADES SHOWN TO THE NEAREST TENTH REPRESENT EXISTING GROUND ELEVATION ALONG THE CENTERLINE.
GRADES SHOWN TO THE NEAREST HUNDRETH REPRESENT FINISH GRADE ELEVATION ALONG THE CENTERLINE.

PROJECT NAME: ST. ALBANS	
PROJECT NUMBER: HPP 8000(17)	
FILE NAME: 57414_PRO.dgn	PLOT DATE: 3/4/2016
PROJECT LEADER: M.A. COLGAN	DRAWN BY: G. GOMEZ
DESIGNED BY: D.M. PECK	CHECKED BY: M.J. SERVETAS
FEDERAL STREET PROFILE (SHEET 3 OF 6)	SHEET 64 OF 230

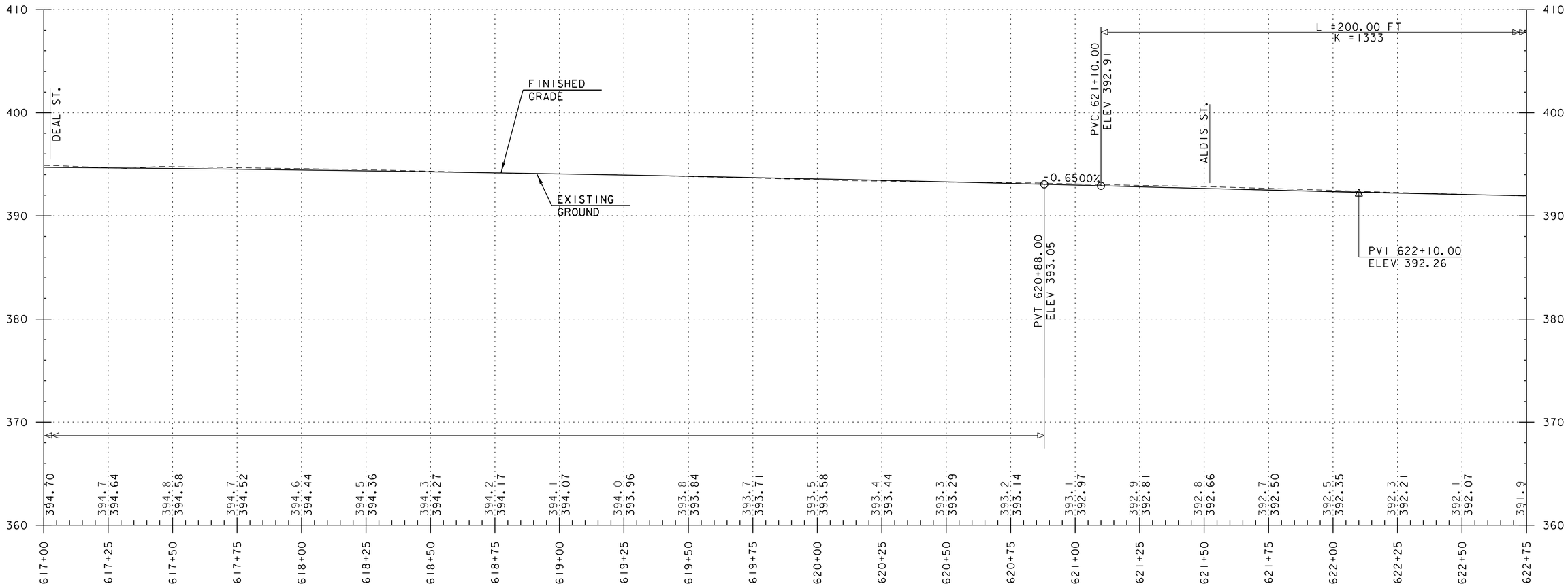

NOTE:

GRADES SHOWN TO THE NEAREST TENTH REPRESENT EXISTING GROUND ELEVATION ALONG THE CENTERLINE.
GRADES SHOWN TO THE NEAREST HUNDRETH REPRESENT FINISH GRADE ELEVATION ALONG THE CENTERLINE.

PROJECT NAME: ST. ALBANS	
PROJECT NUMBER: HPP 8000(17)	
FILE NAME: 57414_PRO.dgn	PLOT DATE: 3/4/2016
PROJECT LEADER: M.A. COLGAN	DRAWN BY: G. GOMEZ
DESIGNED BY: D.M. PECK	CHECKED BY: M.J. SERVETAS
FEDERAL STREET PROFILE (SHEET 4 OF 6)	SHEET 65 OF 230

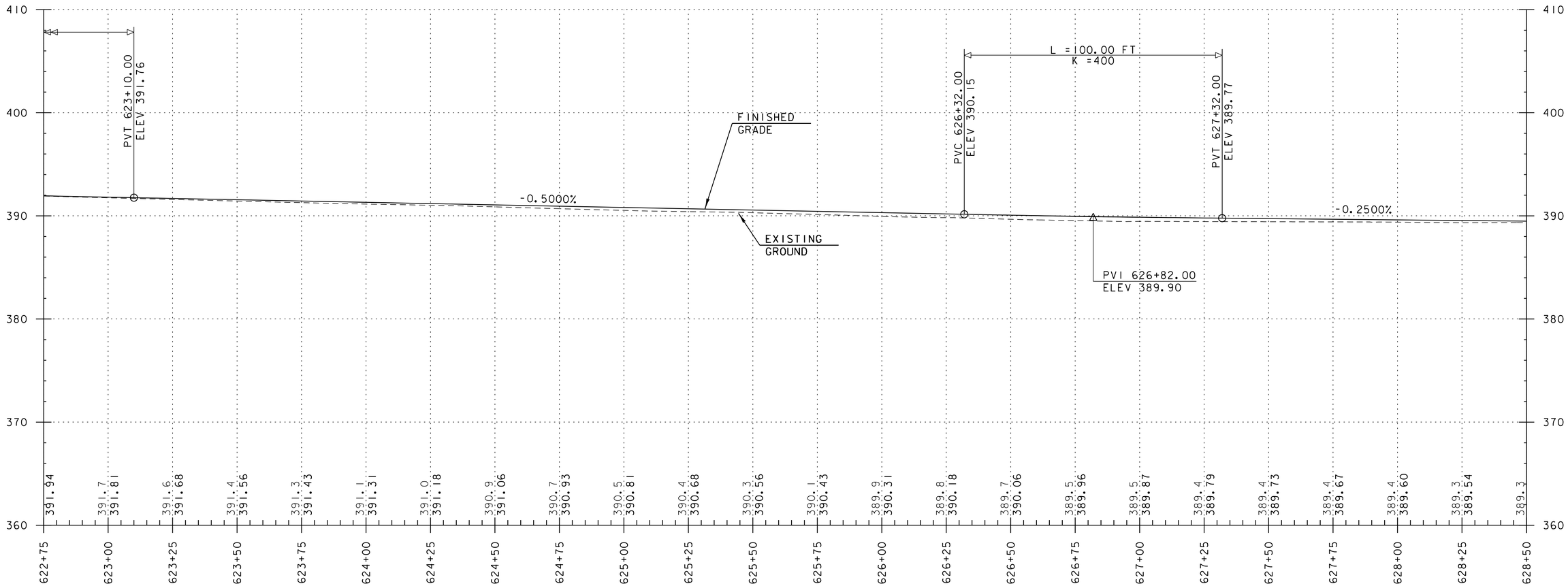

NOTE:

GRADES SHOWN TO THE NEAREST TENTH REPRESENT EXISTING GROUND ELEVATION ALONG THE CENTERLINE.
GRADES SHOWN TO THE NEAREST HUNDRETH REPRESENT FINISH GRADE ELEVATION ALONG THE CENTERLINE.

vhb

PROJECT NAME: ST. ALBANS	
PROJECT NUMBER: HPP 8000(17)	
FILE NAME: 57414_PRO.dgn	PLOT DATE: 3/4/2016
PROJECT LEADER: M.A. COLGAN	DRAWN BY: G. GOMEZ
DESIGNED BY: D.M. PECK	CHECKED BY: M.J. SERVETAS
FEDERAL STREET PROFILE (SHEET 5 OF 6)	SHEET 66 OF 230

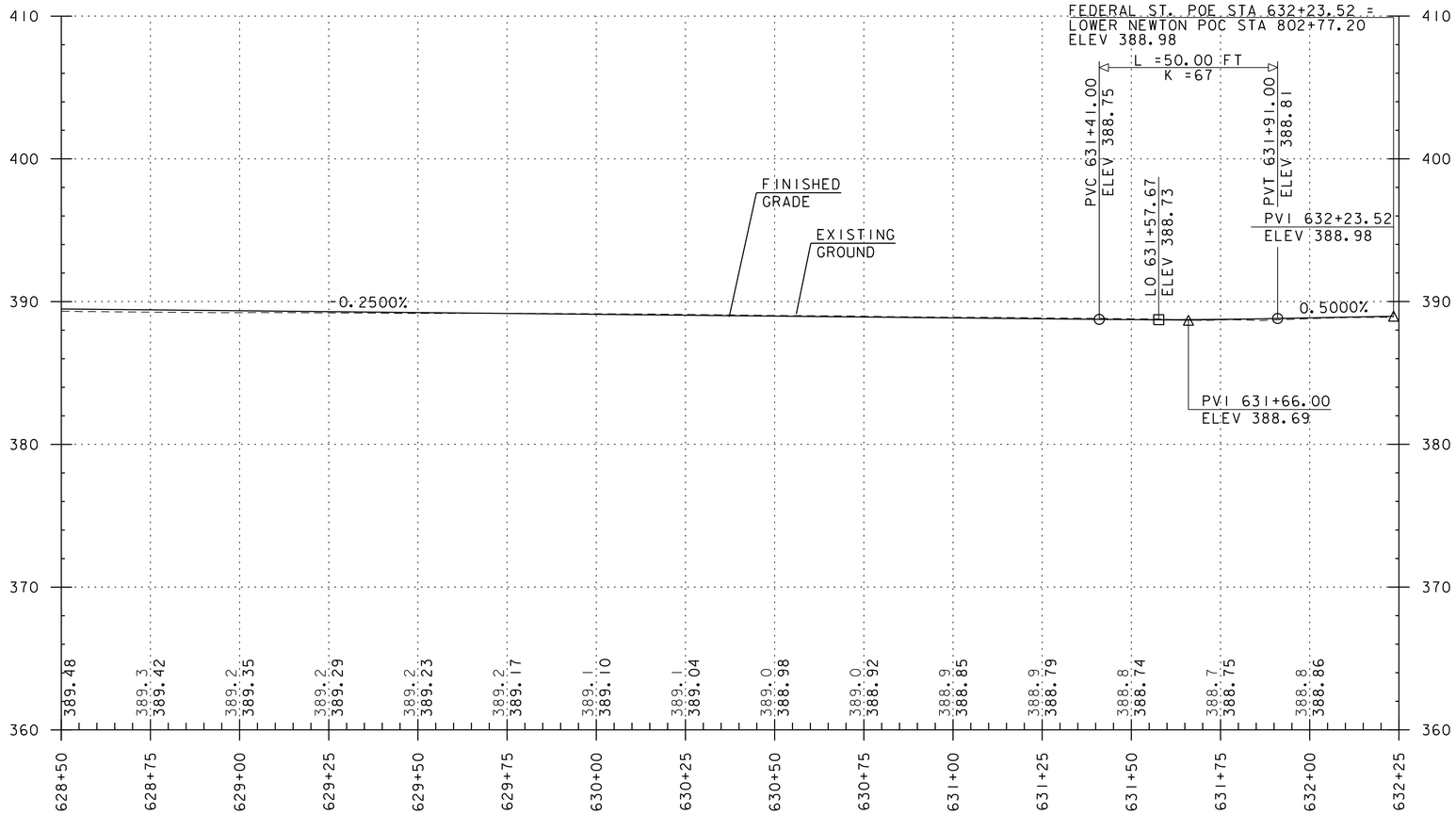

NOTE:

GRADES SHOWN TO THE NEAREST TENTH REPRESENT EXISTING GROUND ELEVATION ALONG THE CENTERLINE.
GRADES SHOWN TO THE NEAREST HUNDRETH REPRESENT FINISH GRADE ELEVATION ALONG THE CENTERLINE.

PROJECT NAME: ST. ALBANS	
PROJECT NUMBER: HPP 8000(17)	
FILE NAME: 57414_PRO.dgn	PLOT DATE: 3/4/2016
PROJECT LEADER: M.A. COLGAN	DRAWN BY: G. GOMEZ
DESIGNED BY: D.M. PECK	CHECKED BY: M.J. SERVETAS
FEDERAL STREET PROFILE (SHEET 6 OF 6)	SHEET 67 OF 230

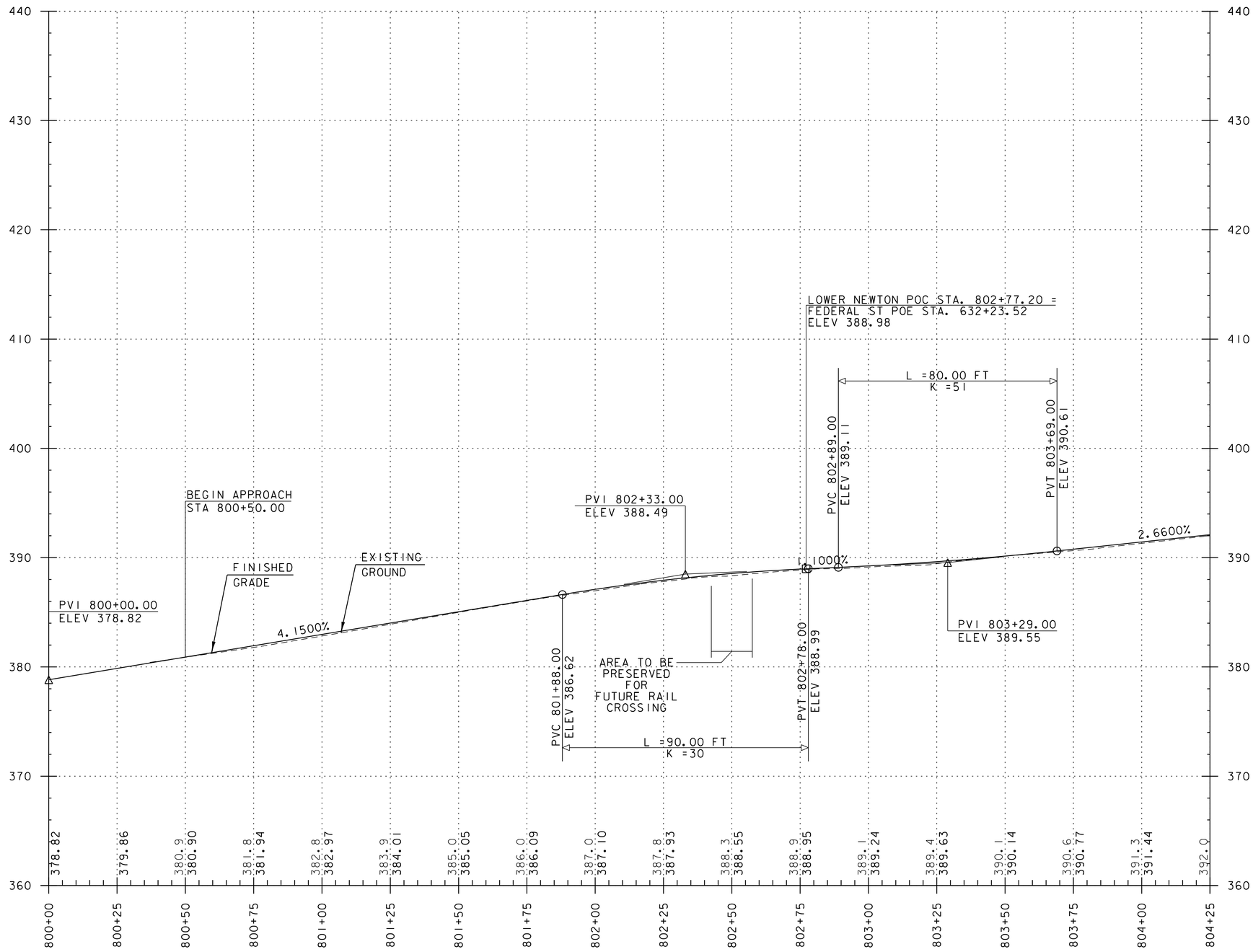

NOTE:

GRADES SHOWN TO THE NEAREST TENTH REPRESENT EXISTING GROUND ELEVATION ALONG THE CENTERLINE.
GRADES SHOWN TO THE NEAREST HUNDRETH REPRESENT FINISH GRADE ELEVATION ALONG THE CENTERLINE.

vhb

PROJECT NAME: ST. ALBANS	
PROJECT NUMBER: HPP 8000(17)	
FILE NAME: 57414_PRO.dgn	PLOT DATE: 3/4/2016
PROJECT LEADER: M.A. COLGAN	DRAWN BY: G. GOMEZ
DESIGNED BY: D.M. PECK	CHECKED BY: M.J. SERVETAS
LOWER NEWTON PROFILE (SHEET 1 OF 2)	SHEET 68 OF 230

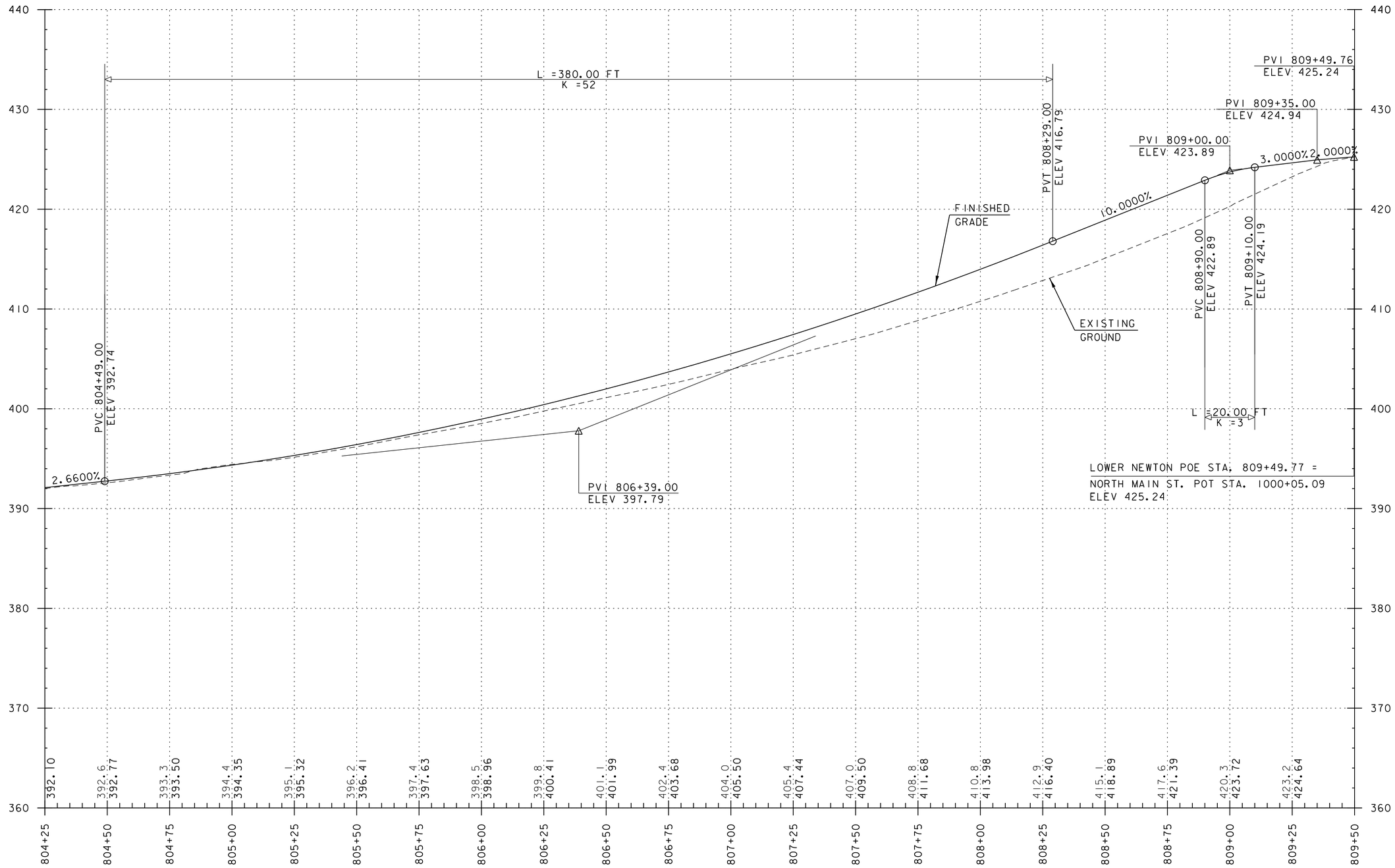

NOTE:

GRADES SHOWN TO THE NEAREST TENTH REPRESENT EXISTING GROUND ELEVATION ALONG THE CENTERLINE.
GRADES SHOWN TO THE NEAREST HUNDRETH REPRESENT FINISH GRADE ELEVATION ALONG THE CENTERLINE.

vhb

PROJECT NAME: ST. ALBANS	
PROJECT NUMBER: HPP 8000(17)	
FILE NAME: 57414_PRO.dgn	PLOT DATE: 3/4/2016
PROJECT LEADER: M.A. COLGAN	DRAWN BY: G. GOMEZ
DESIGNED BY: D.M. PECK	CHECKED BY: M.J. SERVETAS
LOWER NEWTON PROFILE (SHEET 1 OF 2)	SHEET 69 OF 230

100 STA 902+25 36.8 RT TO STA 902+34 36.4 RT
CONST. 7 LF X 15" RCP, CLASS III
CONST. CB + 34, 36.4' RT ALONG EOP
15" INV (EX CB) = 403.60 OUT
TOP OF GRATE 410.18

101 STA 404+93.44 25.0 LT TO STA 101+93.43 5.0 LT
CONST. 17 LF X 18" RCP, CLASS III
CONST. CB + 93, 25' LT ALONG EOP
18" INV (103) = 398.81 OUT
TOP OF GRATE 403.81

102 STA 101+93.41 18.5 RT TO STA 101+93.43 4.99 LT
CONST. 21 LF X 18" RCP, CLASS III
CONST. CB + 93, 18.5' RT
18" INV (103) = 398.90 OUT
TOP OF GRATE 403.45

103 STA 103+93.43 5.0 LT TO STA 104+42.04 5.0 LT
CONST. 245 LF X 18" RCP, CLASS III
CONST. MH + 93, 5' LT
18" INV (101) = 398.71 in
18" INV (102) = 398.71 in
18" INV (106) = 398.71 OUT
TOP OF GRATE 403.71

104 STA 104+42.00 14.0 LT TO STA 104+42.04 5.0 LT
CONST. 6 LF X 18" RCP, CLASS III
CONST. CB + 42, 5' LT
18" INV (106) = 386.38 OUT
TOP OF GRATE 391.38

105 STA 506+92, 14' RT TO STA 104+42 5.00 LT
CONST. 17 LF X 18" RCP, CLASS III
CONST. CB + 42, 14' RT ALONG EOP
18" INV = 386.48 OUT
TOP OF GRATE 391.08

106 STA 104+42 5.0 LT TO STA 106+57 5 LT
CONST. 212 LF x 18" RCP, CLASS III
CONST. MH + 42, 14' RT ALONG EOP
18" INV x 3 (103, 104, 105)= 386.28 in
18" INV= 386.28 OUT
TOP OF GRATE 391.28

107 STA 106+57 14.0 LT TO STA 106+57 5.0 LT
CONST. 6 LF X 18" RCP, CLASS III
CONST. SHALLOW CB + 57, 14' RT, ALONG EOP
18" INV (108) = 382.10 OUT
TOP OF GRATE 385.07

108 STA 106+57 5.0 LT TO STA 107+50 13.0 LT
CONST. 93 LF X 18" RCP, CLASS III
CONST. MH + 57, 5' LT
18" INV x 3 (106, 107, 109) = 381.35 in
18" INV (403) = 381.35 OUT
TOP OF GRATE 385.07

109 STA 106+56 15.0 RT TO STA 106+57 5.0 RT
CONST. 17 LF X 18" RCP, CLASS III
CONST. SHALLOW CB + 57, 15' RT ALONG EOP
15" INV (108) = 381.80 OUT
TOP OF GRATE 384.75

110 STA 107+50 13.0 LT TO STA 107+63 35.0 LT
CONST. 24 LF X 18" RCP, CLASS III
CONST. MH +50, 13' LT ALONG EOP
18" INV (108, 111) = 380.60 in
18" INV (112) = 380.60 OUT
TOP OF GRATE 385.90

111 STA 107+50 38.0 LT TO STA 107+50 13.0 LT
CONST. 47 LF X 18" RCP, CLASS III
CONST. SHALLOW CB +50, 38' LT ALONG CURBLINE
18" INV (110) = 380.95 OUT
TOP OF GRATE 383.90

112 CONST. OF +63, 35' LT
18" INV (110) = 380.40 in

113 CONST. OF +68, 34' LT
18" INV (114) = 381.00 in

114 STA 109+48 11.0 RT TO STA 107+67 35.0 LT
CONST. 188 LF X 18" RCP, CLASS III
CONST. MH +48, 11' RT
18" INV (113) = 383.00 OUT
18" INV x2 (114, 115) = 383.00 in
TOP OF GRATE 386.84

115 STA 109+48 25.0 RT TO STA 109+47.9 11.0 RT
CONST. 11 LF X 18" RCP CLASS III
CONST. CB +48, 25' RT ALONG CURBLINE
18" INV (114) = 383.20 OUT
TOP OF COVER 387.15

116 STA 109+48 14.0 LT TO STA 109+8 11.0 RT
CONST. 22 LF X 18" RCP, CLASS III
CONST. CB +48, 14' LT
18" INV (114) = 383.20 OUT
TOP OF GRATE 387.60

NASON CONNECTOR

PROJECT NAME: ST. ALBANS
PROJECT NUMBER: HPP 8000(17)

FILE NAME: 57414_TYP.dgn
PROJECT LEADER: M.A. COLGAN
DESIGNED BY: D.M. PECK
DRAINAGE NOTES (SHEET 1 OF 7)

PLOT DATE: 3/4/2016
DRAWN BY: DMP / WAD
CHECKED BY: G.L. BAKOS
SHEET 70 OF 230

117 STA 300+70 14.0 LT TO STA 300+98 2.0 LT
CONST. 27 LF X 15" RCP, CLASS III
CONST. SHALLOW CB +70, 14'LT ALONG CURBLINE
15" INV (118) = 383.70 OUT
TOP OF GRATE 386.14

118 STA 300+98 2.0 LT
CONST. DMH + 98, 2' LT OVER EXISTING 18" HDPE
15" INV (117) = 383.05 IN
15" INV (119) = 383.05 IN
18" INV (120) = 383.05 OUT
TOP OF RIM 386.15

119 STA 300+98 25.0 RT TO STA 300+98 2.0 LT
CONST. 31 LF X 15" RCP, CLASS III
CONST. SHALLOW CB + 98, 28' RT
15" INV (118) = 383.30 OUT
TOP OF GRATE 385.78

120 STA 302+85 13.0 LT
CONST. DMH +85, 1' RT OVER EXISTING 18" HDPE
15" INV (121) = 382.25 IN
15" INV (122) = 382.25 IN
18" INV (118) = 382.25 IN
18" INV (124) = 382.25 OUT
TOP OF RIM 385.35

121 STA 302+85 13.0 LT TO STA 302+85 1.0 RT
CONST. 11 LF X 15" RCP, CLASS III
CONST. CB + 85, 13' LT ALONG CURBLINE
15" INV (120) = 382.35 OUT
TOP OF GRATE 385.15

122 STA 302+85 22.0 RT TO STA 302+85 1.00 RT
CONST. 17 LF X 15" RCP, CLASS III
CONST. SHALLOW CB + 85, 22' RT ALONG CURBLINE
15" INV (120) = 382.45 OUT
TOP OF GRATE 384.90

123 STA 305+15 14.0 LT TO STA 305+15 2.0 RT
CONST. CB 17 LF X 18" RCP, CLASS III
CONST. SHALLOW CB + 15, 14' LT ALONG CURBLINE
18" INV (124) = 381.3 OUT
TOP OF GRATE 384.15

124 STA 305+15 2.0 RT
CONST. DMH +15, 2' RT OVER EXISTING 18" HDPE
18" INV (123) = 381.10 IN
18" INV (125) = 381.20 IN
18" INV (120) = 381.20 IN
18" INV (127) = 381.10 OUT
TOP OF RIM 384.32

125 STA 305+15 15.0 RT TO STA 305+15 2.0 RT
CONST. 10 LF X 18" RCP, CLASS III
CONST. SHALLOW CB +15, 15' RT ALONG CURBLINE
18" INV (124) = 381.20 OUT
TOP OF GRATE 384.13

126 STA 306+65 38.0 LT TO STA 306+85 49.0 LT
CONST. MH +65, 38.0 LT
CONST. 18 LF x 18" RCP
OUTlet +85.0, 49.0 LT
18" INV (127) = 379.80 IN
18" INV (pond) = 379.50 OUT
TOP OF RIM 385.00

127 STA 306+60 1.0 RT TO STA 306+65 38.0 LT
CONST. MH +60, 1' RT OVER EXISTING 18" HDPE
CONST 36 LF x 18" RCP
18" INV (124) = 380.00 IN
18" INV (128) = 380.00 IN
18" INV(126) = 379.75 OUT
TOP OF GRATE 384.85

128 STA 307+18 BL
CONST. MH +18, ALONG baseline
18" INV (129) = 380.48 IN
18" INV (130) = 380.48 IN

129 STA 307+18 14' RT TO STA 307+18 BL
CONST. 11 LF X 18" RCP CLASS III
CONST. CB +18, 14' RT ALONG CURBLINE
18" INV (128) = 380.75 OUT
TOP OF GRATE 384.32

130 STA 307+65 14.0 LT TO STA 307+18 BL
CONST. 46 LF X 18" RCP, CLASS III
CONST. CB +65, 14' LT
18" INV (128) = 381.00 OUT
TOP OF GRATE 385.20

131 STA 310+66 13.0 LT TO STA 310+66 7.0 RT
CONST. 3 LF X 18" RCP, CLASS III (to 132)
CONST. 141 LF x 18" RCP, CLASS III (to 10)
CONST. CB + 66, 13' LT ALONG CURBLINE
18" INV (10) = 379.90 OUT
18" INV (132) = 380.60 IN
TOP OF GRATE 385.39

132 STA 310+66 7.0 LT TO STA 312+! 9.0 LT
CONST. 181 LF X 18" RCP, CLASS III
CONST. MH +66, 7' LT
18" INV (131) = 380.70 OUT
18" INV (133) = 380.70 IN
18" INV (135) = 380.70 IN
TOP OF RIM 385.52

133 STA 310+66 14.0 LT TO STA 310+! 7.0 LT
CONST. 17 LF x 18" RCP, CLASS III
CONST. CB +66, 14' LT ALONG CURBLINE
18" INV (132) = 381.85 OUT
TOP OF RIM 384.8

10 STA 309+24 44 LT
CONST. OF +24, 44' LT
18" INV (131) = 380.3 IN

134 STA 312+50 16.0 LT TO STA 312+50 9.0 LT
CONST. 4 LF X 18" RCP, CLASS III
CONST. SHALLOW CB +50, 16' LT ALONG CURBLINE
18" INV (135) = 381.74 OUT
TOP OF GRATE 384.74

135 STA 312+50 9.00 LT
CONST DMH +50, 9'L
18" INV (134) = 381.60 IN
18" INV (136) = 381.60 IN
18" INV (132) = 381.60 OUT
TOP OF RIM 384.89

136 STA 312+50 14.00 RT TO 312+50 9.0 LT
CONST. 19'x15" RCP, CLASS III
CONST. SHALLOW CB +50, 14'R ALONG CURBLINE
15" INV (135) = 382.10 OUT
TOP OF GRATE 384.55

137A STA 314+06 23.00 LT TO EX 30" RCP
Remove EXISTING MH and install 6' dia DMH
18" INV (137) = 379.85 IN
30" INV (Ex) = 379.60 OUT
TOP OF GRATE 385.70

137 STA 314+06 14.0 LT TO 314+06 23' LT
CONST. 7 LF x 18" RCP, CLASS III
CONST. CB +06, 23' LT ALONG CURBLINE
18" INV (137A) = 380.00 OUT
18" INV (138) = 308.00 IN
12" INV (Ex) = 380.00 IN
TOP OF GRATE 385.65

138 STA 314+08 13.00 RT TO 314+06 14' LT
CONST. 24 LF x 18" RCP, CLASS III
CONST. CB +06, 14' RT ALONG CURBLINE
8" INV (EX) = 380.45 IN
18" INV (137) = 380.55 OUT
TOP OF GRATE 385.63

LEMNAH DRIVE

PROJECT NAME: ST. ALBANS
PROJECT NUMBER: HPP 8000(17)

FILE NAME: 57414_TYP.dgn
PROJECT LEADER: M.A. COLGAN
DESIGNED BY: D.M. PECK
DRAINAGE NOTES (SHEET 2 OF 7)

PLOT DATE: 3/4/2016
DRAWN BY: DMP / WAD
CHECKED BY: G.L. BAKOS
SHEET 71 OF 230

139 STA 316.61 51.0 LT TO STA 316+70 35.0 LT
CONST. 17 LF X 18" RCP, CLASS III
CONST. SHALLOW CB +61, 51'LT ALONG EOP
18" INV (140) = 380.95 OUT
TOP OF GRATE 386.45

140 STA 316+70 35.0 LT TO STA 316+83 43" LT
CONST. DMH + 70, 35' LT
CONST. 14 LF x 18" RCP, CLASS III
18" INV (139) = 380.75 IN
18" INV (141)= 380.75 IN
18" INV (EX CB) = 381.50 OUT
TOP OF RIM 386.47

141 STA 316.62 23.0 RT TO STA 316+70 35.00 LT
CONST. 56 LF X 18" RCP, CLASS III
CONST. CB + 62, 23' RT
18" INV (118) = 381.30 OUT
TOP OF GRATE 386.24

142 STA 317+24 37.0 RT TO STA 2003+84 3.0 LT
CONST. CB +24, 37' RT
CONST. 24 LF X 15" RCP, CLASS III
18" INV (EX MH) = 380.10 OUT
18" INV (143) = 383.35 IN
TOP OF RIM 386.75

143 STA 317+18 47.0 RT TO STA 317+24 37.0 RT
CONST. 8 LF X 15" RCP, CLASS III
CONST. CB + 18, 47' RT ALONG EOP
18" INV (142) = 380.50 OUT
18" INV (144) = 380.75 IN
TOP OF GRATE 386.75

144 STA 317+29 56.0 RT TO STA 317+18 47.00 RT
CONST. 13 LF X 15" RCP, CLASS III
CONST. CB + 29, 56' LT ALONG EOP
18" INV (143) = 381.00 OUT
TOP OF GRATE 386.75

145 STA 2002+88 16.0 LT TO STA 2003+04 19.0 RT
CONST. CB 14 LF X 15" RCP, CLASS III
CONST. CB + 88, 16' LT ALONG EOP
18" INV (146) = 380.50 OUT
TOP OF GRATE 385.45

146 STA 2003+04 19.0 LT TO STA 2003+05 6.0 LT
CONST. DMH +04, 19' LT ALONG EOP
CONST. 9 LF x 18" RCP, CLASS III
18" INV (EX DMH) = 373.90 OUT
18" INV (145) = 380.20 IN
18" INV (147) = 381.00 IN
TOP OF RIM 385.90

146A STA 2003+04 6.00 LT
EXISTING DMH OVER 36" RCP
36" INV (ex)= 373.80 IN
18" RCP (146)= 380.00 IN
18" RCP (140)= 380.15 IN
36" RCP (ex) = 373.80 OUT
RIM= 386.3

147 STA 2003+58 61.0 LT TO STA 2003+04 19.0 LT
CONST. 65 LF X 15" RCP, CLASS III
CONST. CB +58, 61' LT ALONG CURBLINE
18" INV (146) = 381.65 OUT
TOP OF GRATE 386.50

148 STA 2004+31 23.0 LT TO STA 2003+84 3.0 LT
CONST CB +31, 23' LT ALONG CURBLINE
CONST 49 LF x 18" RCP, CLASS III
18" INV (EX DMH) = 380.40 OUT
TOP OF GRATE 386.30

148A STA2003+84 3.00 LT
Ex DMH OVER 36" RCP
36 RCP (ex)= 374.30 IN
18 RCP (148)= 379.90 IN
18" RCP (142)= 379.90 IN
36" RCP (ex)= 374.3 OUT
RIM= 386.8

LOWER WELDEN STREET ROUNDABOUT

PROJECT NAME: ST. ALBANS
PROJECT NUMBER: HPP 8000(17)

FILE NAME: 57414_TYP.dgn
PROJECT LEADER: M.A. COLGAN
DESIGNED BY: D.M. PECK
DRAINAGE NOTES (SHEET 3 OF 7)

PLOT DATE: 3/4/2016
DRAWN BY: DMP / WAD
CHECKED BY: G.L. BAKOS
SHEET 72 OF 230

149 STA 402+89 17.0 LT
CONST. CB +89, 17'LT OVER EXISTING 12" RCP
REMOVE & SALVAGE EXISTING CB FRAME & GRATE TO CITY
12" INV (EX) = 379.50 OUT
TOP OF GRATE 386.40

150 STA 403+35 14.0 RT
CONST. CB +35, 14'LT OVER EXISTING 12" RCP
REMOVE & SALVAGE EXISTING CB FRAME & GRATE TO CITY
12" INV (EX) = 382.70 OUT
TOP OF GRATE 386.40

151 STA 404+14 16.0 LT TO STA 300+98 2.00 LT
CONST. CB + 14, 16' LT OVER EXISTING 12" RCP
12" INV (EX) = 380.65 OUT
12" INV (EX CB) = 380.65 IN
TOP OF GRATE 385.50

152 STA 404+41 41.0 LT TO STA 404+41 26.0 LT
CONST. SHALLOW CB +41, 41' LT
MODIFY EXISTING CB to DMH
CONST. 12 LF x 12" RCP, CLASS III
12" INV (EX CB) = 380.80 OUT
TOP OF RIM 383.50

153 STA 405+75 14.0 RT
CONST. CB + 75, 14' LT ALONG EOP
REMOVE & SALVAGE EXISTING CB FRAME & GRATE TO CITY
12" INV (EX) = 380.30 OUT
TOP OF GRATE 385.43

154 STA 405+96 37.0 LT TO STA 405+96 29.00 LT
CONST. 6 LF X 8" RCP, CLASS III
CONST. SHALLOW CB + 96, 37' LT
MODIFY EXISTING CB to DMH
8" INV (EX CB) = 382.10 OUT
TOP OF GRATE 383.75

155 STA 406+05 16.0 LT
CONST. CB + 05, 16' LT OVER EXISTING 8" CI
8" INV (EX CB) = 380.50 IN
8" INV (EX CB) = 379.62 OUT
TOP OF GRATE 385.10

156 STA 406+36 14.0 RT
CONST. CB +36, 14' RT OVER EXISTING 12" RCP ALONG EOP
12" INV (EX CB) = 381.80 OUT
TOP OF GRATE 385.22

157 STA 407+52 16.0 LT TO STA 407+54 10.0 LT
CONST. 3 LF X 18" RCP, CLASS III
CONST. CB +52, 16' LT ALONG EOP
18" INV (158) = 378.50 OUT
TOP OF GRATE 384.50

158 STA 407+54 10.0 LT
CONST. DMH +54, 10' LT OVER EXISTING 21" RCP
18" INV (157) = 378.47 IN
18" INV (159) = 378.47 IN
18" INV (EX) = 378.2 IN
18" INV (EX) = 378.2 OUT
TOP OF RIM 384.74

159 STA 407+54 14.0 RT TO STA 407+54 10' LT
CONST. CB +54, 14' RT ALONG EOP
CONST. 21 LF x 18" RCP, CLASS III
18" INV (158) = 378.53 OUT
TOP OF GRATE 384.67

160 STA 408+67 14.00 RT
CONST. CB +67, 14' RT ALONG CURBLINE
15" INV (EX) = 381.30 IN
TOP OF RIM 385.25

161 STA 408+32 14 LT
CONST. CB +32, 14' LT ALONG CURBLINE
CONST. DMH +32, OVER EXIST. 36" RCP, APPROX. 22' LT
CONST. 6 LF x 15" RCP CLASS III
15" RCP = 379.00 out
RIM= ADJUST TO GRADE

411 STA 801+95, 45.0 LT TO STA 802+00 24.0 LT
CONST. 18 LF X 15" HPDE
CONST. RCDI + 95, 45' LT IN THE GRASSED AREA
15" INV (412) = 379.70 OUT
TOP OF GRATE 383.80

412 STA 802+00 24.0 LT TO STA 802+04 14.0 LT
CONST. 7 LF x 18" RCP
CONST. CB + 00, 23.9' LT ALONG CURBLINE
15"INV (504) = 379.85 IN
15"INV (411) = 379.55 IN
15"INV (413) = 379.45 OUT
TOP OF GRATE=

413 STA 802+04 14.0 LT
CONST 4' DIA DMH + 04, 14' LT OVER EXISTING 21" RCP
21" INV (A5)= 379.35 IN
15" INV (412)= 379.40 IN
18" INV (A4)= 379.50 IN
21" INV (A2)= 379.35 OUT
TOP OF RIM=

A1 STA 800+50. 12.0 RT
ADJUST CB GRATE O.1' BELOW GRADE

A2 STA 801+55, 13.0 LT
ADJUST CB GRATE O.1' BELOW GRADE

A3 LEFT INTENTIONALLY BLANK

A4 STA 802+18, 24.0 RT TO STA 802+04 14.0 LT
CONST 36 LF x 18" RCP, CLASS III
PLUG EXISTING 6" OUTLET
ADJUST CB GRATE O.1' BELOW GRADE
18" INV (413)= 379.75 OUT
TOP OF GRATE 384.90

ALLEN STREET TO MARKET STREET

PROJECT NAME: ST. ALBANS
PROJECT NUMBER: HPP 8000(17)

FILE NAME: 57414_TYP.dgn
PROJECT LEADER: M.A. COLGAN
DESIGNED BY: D.M. PECK
DRAINAGE NOTES (SHEET 4 OF 7)
PLOT DATE: 3/4/2016
DRAWN BY: DMP / WAD
CHECKED BY: G.L. BAKOS
SHEET 73 OF 230

401 STA 204+10, 12.0 RT TO STA 204+10 12.0 LT
CONST. 20 LF X 15" RCP, CLASS III
CONST. CB + 10, 12' RT, ALONG CURBLINE
15" INV (402) = 382.70 OUT
TOP OF GRATE 386.70

402 STA 204+10 12.0 LT TO STA 39+74, 20.0 RT
CONST. 128 LF X 15" RCP, CLASS III
CONST. CB + 10, 12' LT ALONG GUTTER LINE
15" INV (401) = 382.85 IN
15" INV (403) = 382.55 OUT
TOP OF GRATE 386.85

403 STA 204+10 12.0 LT TO STA 39+74, 20.0 RT
CONST. 128 LF X 15" RCP, CLASS III
CONST. 4' DIA DMH + 74, 20' RT
15" INV (402) = 379.40 IN
18" INV (stub) = 379.40 IN Connect to 18" stub from by others
18" INV (601)= 380.00 IN
18" INV (A17) = 379.40 OUT
TOP OF COVER 387.30

404 STA 201+60, 12.0 RT TO STA 202+36, 12.0 RT
CONST. 72 LF X 15" RCP, CLASS III
CONST. CB + 60, 12' RT
18" INV (A9) = 381.45 IN
18" INV (405) = 381.45 OUT
TOP OF GRATE 385.95

405 STA 201+10, 12.0 RT TO STA 201+60, 20.0 RT
CONST. 46 LF X 15" RCP, CLASS III
CONST. CB + 10, 12' RT ALONG CURBLINE
15" INV (404) = 380.90 IN
15" INV (406) = 380.90 OUT
TOP OF GRATE 385.95

406 STA 201+60, 20.0 RT TO STA 200+30, 35.0 RT
CONST. 30 LF X 18" RCP, CLASS III
CONST. CB + 60, 20' LT
18" INV (405) = 380.60 IN
18" INV (407) = 380.60 OUT
TOP OF COVER 385.40

407 STA 200+30, 35.0 RT TO STA 501+32, 24.0 RT
CONST. 62 LF X 18" RCP CLASS III
CONST. CB + 30, 35' RT
18" INV (406) = 380.40 IN
18" INV (408) = 380.40 OUT
TOP OF COVER 386.05

408 STA 501+32, 24.0 RT TO STA 501+88 BASELINE
CONST. 50 LF X 18" RCP, CLASS III
CONST. DMH + 32, 24' RT
18" INV (409) = 380.10 IN
18" INV (407) = 380.00 IN
18" INV (A5) = 380.00 OUT
TOP OF GRATE 385.45

409 STA 200+64, 17.0 LT TO STA 501+32, 24.0 RT
CONST. 38 LF X 15" RCP, CLASS III
CONST. CB + 85, 17' LT
CONST. OUTlet to pond + 82, 25' LT
15" INV (408) = 380.40 OUT
TOP OF GRATE 385.30

410 LEFT INTENTIONALLY BLANK

501 STA 503+75, 12.0 LT TO STA 503+75, 12.0 RT
CONST. 20 LF X 15" RCP, CLASS III
CONST. RCDI + 75, 12' LT ALONG GUTTER LINE
15" INV (502) = 381.35 OUT
TOP OF GRATE 385.25

502 STA 503+75, 12.0 RT TO STA 502+34, 17.0 RT
CONST. 128 LF X 15" RCP, CLASS III
CONST. CB + 34, 17' RT ALONG EOP
15" INV (501) = 381.20 IN
15" INV (503) = 381.10 OUT
TOP OF GRATE 385.25

503 STA 502+34, 17.0 RT TO STA 501+88 BASELINE
CONST. 44 LF X 15" RCP, CLASS III
CONST. CB + 34, 17' RT
15" INV (502) = 380.30 IN
15" INV (505) = 380.15 OUT
TOP OF GRATE 384.30

504 STA 502+20, 20.5 LT TO STA 802+00 24.0 LT
CONST. 46 LF X 15" RCP, CLASS III
CONST. CB + 20, 20.5' RT ALONG EOP
15" INV (412) = 380.25 OUT
TOP OF GRATE

505 LEFT INTENTIONALLY BLANK

506 LEFT INTENTIONALLY BLANK

507 LEFT INTENTIONALLY BLANK

508 LEFT INTENTIONALLY BLANK

509 STA 506+92, 21.0 LT
CONST. RCDI + 92, 21' LT OVER EXISTING DRAIN LINE
INV (OUT) = MAINTAIN EXISTING (FIELD VERIFY)
TOP OF GRATE

510 LEFT INTENTIONALLY BLANK

REMOVAL NOTES

R1 STA 200+40, 27 RT
REMOVE EXISTING MH
PLUG AND ABANDON EXISTING DRAIN PIPES

R2 STA 200+30, 32 RT
REMOVE EXISTING MH
PLUG AND ABANDON EXISTING DRAIN PIPES

R3 STA 203+80, 11 RT
REMOVE EXISTING CB
PLUG AND ABANDON EXISTING DRAIN PIPES

R4 STA 203+76, 12 LT
REMOVE EXISTING CB
PLUG AND ABANDON EXISTING DRAIN PIPES

ADJUSTMENT NOTES

A5 STA 501+88 BASELINE
ADJUST DMH COVER
CORE TWO HOLES FOR NEW PIPES
15" INV (503)= 379.5 IN
18" INV (408)= 379.50 IN
21" INV (413)= 379.50 OUT

A6 STA 501+99, 1.0 RT
REMOVE EXISTING CB

A7 STA 501+06, 9.00 LT
ADJUST SAN MH COVER, SET TO COVER GRADE

A8 STA 500+81, 17.0 RT
CHANGE CB TO MH, SET COVER TO GRADE

A9 STA 202+36, 12.0 RT
CORE HOLE IN EXIST. CB FOR NEW 15" RCP OUTLET
15" INV (404)= 381.90 OUT
ADJUST CB GRATE O.1' BELOW GRADE
TOP OF GRATE 386.15

A22 STA 600+14, 5.00 RT
EXIST. SEWER MH.
CONST. 18 LF OF 15" PVC PIPE
CORE NEW HOLE FOR 15" PVC PIPE
CONNECT TO STUB FROM SMH STA 40+16, 6.5 LT
15" PVC INV in = 379.00 (NEW)
15" AC INV in = 378.60
15" AC INV OUT = 378.60

S1 STA 203+86 1.50 RT
EXIST. SEWER MH
CONST. 182 LF OF 8" PVC PIPE
CORE HOLE INTO EXISTING SMH
8" PVC INV OUT = 381.40 (NEW)
8" PVC INV in = 381.40
8" PVC INV OUT = 381.40

S2 STA 600+06 9.00 LT
CONST. SMH OVER EXIST. 15" AC PIPE
PROVIDE HOLES FOR 15" AC & 8" PVC PIPE
8" PVC INV in = 378.35
15" AC INV in = 378.35
15" AC INV OUT = 378.35

ALLEN STREET TO CATHERINE STREET

PROJECT NAME: ST. ALBANS
PROJECT NUMBER: HPP 8000(17)

FILE NAME: 57414_TYP.dgn
PROJECT LEADER: M.A. COLGAN
DESIGNED BY: D.M. PECK
DRAINAGE NOTES (SHEET 5 OF 7)
PLOT DATE: 3/4/2016
DRAWN BY: DMP / WAD
CHECKED BY: G.L. BAKOS
SHEET 74 OF 230

601 STA 600+45, 28.0 LT TO 39+74, 20.0
CONST. 74 LF X 18" RCP, CLASS III
CONST. RCDI + 45, 28' LT ALONG CURBLINE
18" INV (403) = 381.00 OUT
TOP OF GRATE 0.1 FT BELOW GUTTERLINE

602 LEFT BLANK INTENTIONALLY
603 LEFT BLANK INTENTIONALLY
604 LEFT BLANK INTENTIONALLY

605 STA 602+64, 33.0 LT TO 603+50, 33.0
CONST. 82 LF X 18" RCP, CLASS III
CONST. RCDI + 64, 33' LT ALONG CURBLINE
18" INV (606) = 383.80 OUT
TOP OF GRATE 0.1 FT BELOW GUTTERLINE

606 STA 603+50, 33.0 LT TO 603+50, 2.0
CONST. 32 LF X 18" RCP, CLASS III
CONST. CB + 50, 33' LT
18" INV (605) = 383.60 IN
18" INV (607) = 383.60 OUT
TOP OF GRATE 0.1 FT BELOW GUTTERLINE

607 STA 603+50, 2.0 RT
CONST. DMH + 50, 2' RT OVER EXISTING 21" RCP
18" INV (606) = 383.53 IN
21" INV (EXISTING) 383.53 IN
21" INV (EXISTING) 383.53 OUT
TOP OF COVER MATCH PAVEMENT GRADE

611 STA 604+95 14.00 RT TO 604+98 7.0 RT
CONST. CB +95, 14' RT
CONST. 5 LFx18" RCP, CLASS III
18" INV (612) = 385.19 OUT
TOP OF GRATE MATCH PAVEMENT GRADE

612 STA 604+98 7.00 RT
CONST. MH +98, 7' RT OVER EXISTING 21" RCP
21" INV (EX) = 385.09 IN
21" INV (EX) = 385.09 OUT
18" INV (611) = 385.09 IN
TOP OF RIM MATCH PAVEMENT GRADE

613 STA 605+35 19.0 LT TO 605+62 9.0 RT
CONST. CB +35, 19' LT ALONG CURBLINE
CONST. 36 LF x 18" RCP, CLASS III
18" INV (EX DMH) = 385.36 OUT
TOP OF GRATE 0.1 FT BELOW GUTTERLINE

614 STA 606+06 19.0 RT TO 606+27 9.0 RT
CONST. CB +06, 19' RT ALONG CURBLINE
CONST. 22 LF x 18" RCP, CLASS III
18" INV (EX DMH 615) = 385.5O OUT
TOP OF GRATE 0.1 FT BELOW GUTTERLINE

615 STA 606+27 9.0 RT
EXISTING DMH +27, 9' RT
24" INV (EX)= 382.1 IN
24" INV (EX)= 382.1 IN
18" INV (614)= 382.1 IN
21" INV (EX)= 381.9 OUT

616 STA 607+61 9.0 RT
CONST. MH +60, 9' RT OVER EXISTING 24" RCP
24" INV (EX) = 384.07 IN
24" INV (EX) = 384.07 OUT
18" INV (617) = 383.01 IN
12" INV (EX CB) = 387.00 IN
TOP OF RIM 391.17

617 STA 607+80 21.0 LT TO 607+61 9.0 RT
CONST. CB +80, 21' LT ALONG CURBLINE
CONST. 32 LF x 18" RCP, CLASS III
18" INV (616) = 384.40 OUT
TOP OF GRATE 390.30

618 STA 611+49 9.00 RT
CONST. MH +49, 9' RT OVER EXISTING 24" RCP
24" INV (EX) = 389.14 IN
24" INV (EX) = 389.14 OUT
18" INV (619) = 389.27 IN
TOP OF RIM 393.92

619 STA 611+65 14.00 LT TO 611+49 9.0 RT
CONST. CB +65, 14' LT ALONG CURBLINE
CONST. 24 LF x 18" RCP, CLASS III
18" INV (618) = 389.88 OUT
TOP OF GRATE 393.89

620 STA 613+01 14.00 LT TO 613+04 7.0 RT
CONST. CB +01, 14' LT ALONG CURBLINE
CONST. 19 LF x 18" RCP, CLASS III
18" INV (EX DMH 621) = 390.43 OUT
TOP OF GRATE 394.47

621 STA 613+04 7.00 RT
EXISTING DMH +04, 7' RT
12" INV(ex)= 390.1 IN
12" INV(ex)= 390.3 IN
18" INV(621)= 390.00 IN
18" INV(ex)= 389.8 OUT
TOP OF COVER MATCH PAVEMENT GRADE

622 STA 614+34 13.0 RT
EXISTING DMH +34, 13' RT
18" INV(ex)= 385.8 IN
18" INV(623)= 386.00 IN
18" INV(ex)= 385.8 OUT
TOP OF COVER MATCH PAVEMENT GRADE

623 STA 614+46 14 LT TO 614+34 13.0 RT
CONST. CB +46, 14' LT
CONST. 28 LF x 18" RCP, CLASS III
18" INV (EX CB 622) = 388.(OUT
TOP OF GRATE 394.77

624 STA 618+00 14 LT TO 618+13 8.0 LT
CONST. CB +00, 14' LT ALONG CURBLINE
CONST. 13 LF x 18" RCP, CLASS III
18" INV (625) = 390.39 OUT
TOP OF GRATE 0.1 FT BELOW GUTTERLINE

625 STA 618+13 8.00 LT TO 619+19 8.0 LT
CONST. MH +13, 8' LT
CONST. 103 LF x 18" RCP, CLASS III
18" INV (624) = 390.10 IN
18" INV (627) = 390.00 OUT
TOP OF RIM MATCH PAVEMENT GRADE

626 STA 619+10 24 RT TO 619+19 8.0 LT
CONST. CB +10, 24' RT ALONG CURBLINE
CONST. 30 LF x 18" RCP, CLASS III
18" INV (627) = 391.33 OUT
TOP OF GRATE 0.1 FT BELOW GUTTERLINE

627 STA 619+19 8 LT TO 619+98 8.0 LT
CONST. MH +19, 8' LT
CONST. 76 LF x 18" RCP, CLASS III
18" INV (626) = 388.83 IN
18" INV (625) = 389.40 IN
18" INV (629) = 389.40 OUT
TOP OF RIM MATCH PAVEMENT GRADE

628 STA 619+98 14.0 LT TO 619+98 8.0 LT
CONST. CB +98, 14' LT ALONG CURBLINE
CONST 3 LFx18" RCP, CLASS III
18" INV (629) = 389.49 OUT
TOP OF GRATE 0.1 FT BELOW GUTTERLINE

629 STA 619+98 8' LT TO 621+19 8' LT
CONST. MH +98, 8' LT
CONST. 118 LF x 18" RCP, CLASS III
18" INV (628) = 388.40 IN
18" INV (627) = 389.00 IN
18" INV (631) = 389.00 OUT
TOP OF RIM MATCH PAVEMENT GRADE

630 STA 621+19 14 LT TO 621+19 8' LT
CONST. CB +19, 14' LT ALONG CURBLINE
CONST. 3 LF x 18" RCP, CLASS III
18" INV (631) = 388.36 OUT
TOP OF GRATE 0.1 FT BELOW GUTTERLINE

631 STA 621+19 8' LT TO 622+97 8.0 LT
CONST. MH +19, 8' LT
CONST. 175 LF x 18" RCP, CLASS III
18" INV (630) = 388.24 IN
18" INV (629) = 388.35 IN
18" INV (633) = 388.35 OUT
TOP OF RIM MATCH PAVEMENT GRADE

A6 STA 501+99, 1.0 RT
REMOVE EXISTING CB

632 STA 622+97 14.00 LT TO 622+97 8.0 LT
CONST. CB +97, 14' LT ALONG CURBLINE
CONST. 3 LF x 18" RCP, CLASS III
18" INV (633) = 387.51 OUT
TOP OF RIM 0.1 FT BELOW GUTTERLINE

633 STA 622+97 8.00 LT TO 623+43 8' LT
CONST MH +97, 8' LT
CONST 45 LF x 18" RCP, CLASS III
18" INV (632) = 387.01 IN
18" INV (631) = 387.40 IN
18" INV (634) = 387.40 OUT
TOP OF RIM MATCH PAVEMENT GRADE

634 STA 623+43 8' LT TO 624+97 8' LT
CONST. MH +43, 8' LT
CONST. 151 LF x 18" RCP, CLASS III
18" INV (635) = 387.15 IN
18" INV (633) = 387.15 IN
18" INV (637) = 387.15 OUT
TOP OF RIM MATCH PAVEMENT GRADE

635 STA 623+43 8.0 LT to 623+43 8.0 LT
CONST. CB +43, 14' RT ALONG CURBLINE
CONST. 19 LF x 18" RCP, CLASS III
18" INV (634) = 387.3 OUT
TOP OF GRATE 0.1 FT BELOW GUTTERLINE

A7 STA 501+06, 9.00 LT
ADJUST SAN MH COVER, SET TO COVER GRADE

A8 STA 500+81, 17.0 RT
CHANGE CB TO MH, SET COVER TO GRADE

A9 STA 202+36, 12.0 RT
CORE HOLE IN EXISTING CB FOR NEW 15" RCP OUTLET
15" INV (404)= 381.90 OUT
ADJUST CB GRATE O.1' BELOW GRADE
TOP OF GRATE 386.15

A10 STA 800+50. 12.0 RT
ADJUST CB GRATE O.1' BELOW GRADE

A11 STA 801+55, 13.0 LT
ADJUST CB GRATE O.1' BELOW GRADE

A12 LEFT INTENTIONALLY BLANK

A13 STA 802+18, 24.0 RT TO 802+04 14.0 LT
CONST 36 LF x 18" RCP, CLASS III
PLUG EXISTING 6" OUTLET
ADJUST CB GRATE O.1' BELOW GRADE
18" INV (413)= 379.75 OUT
TOP OF GRATE 384.90

A14 STA 501+88 BASELINE
ADJUST DMH COVER
CORE TWO HOLES FOR NEW PIPES
15" INV (503)= 379.5 IN
18" INV (408)= 379.50 IN
21" INV (413)= 379.50 OUT

FEDERAL STREET

PROJECT NAME: ST. ALBANS
PROJECT NUMBER: HPP 8000(17)

FILE NAME: 57414_TYP.dgn
PROJECT LEADER: M.A. COLGAN
DESIGNED BY: D.M. PECK
DRAINAGE NOTES (SHEET 6 OF 7)

PLOT DATE: 3/4/2016
DRAWN BY: DMP / WAD
CHECKED BY: G.L. BAKOS
SHEET 75 OF 230

636 STA 624+97 14.00 LT TO 624+97 8.0 LT
CONST. CB +97, 14' LT ALONG CURBLINE
CONST. 3 LF x 18" RCP, CLASS III
18" INV (637) = 386.60 OUT
TOP OF GRATE 0.1 FT BELOW GUTTERLINE

637 STA 624+97 8 LT TO 626+12 8.0 LT
CONST. MH +97, 8' LT
CONST. 112 LF x 18" RCP, CLASS III
18" INV (636) = 386.50 IN
18" INV (634) = 386.35 IN
18" INV (639) = 386.35 OUT
TOP OF RIM MATCH PAVEMENT GRADE

638 STA 626+12 14.0 LT TO 626+12 8.0 LT
CONST. CB +12, 14' LT ALONG CURBLINE
CONST. 3 LF x 18" RCP, CLASS III
18" INV (639) = 385.95 OUT
TOP OF GRATE 0.1 FT BELOW GUTTERLINE

639 STA 626+12 8.00 LT TO 627+00 8.0 LT
CONST. MH +12, 8' LT
CONST. 85 LF x 18" RCP, CLASS III
18" INV (637) = 385.75 IN
18" INV (638) = 385.75 IN
18" INV (640) = 385.75 IN
18" INV (642) = 385.75 OUT
TOP OF RIM MATCH PAVEMENT GRADE

640 STA 626+12 14.00 RT TO 626+12 8.0 LT
CONST. CB +12, 14' RT ALONG CURBLINE
CONST. 19 LF x 18" RCP, CLASS III
18" INV (639) = 385.95 OUT
TOP OF GRATE 0.1 FT BELOW GUTTERLINE

641 STA 627+00 14.0 LT TO 627+00 8.0 LT
CONST. CB +00, 14' LT ALONG CURBLINE
CONST. 3 LF x 18" RCP, CLASS III
18" INV (642) = 385.70 OUT
TOP OF GRATE 0.1 FT BELOW GUTTERLINE

642 STA 627+00 8.0 LT TO 628+02 8.0 LT
CONST. MH +00, 8' LT
CONST. 98 LF x 18" RCP, CLASS III
18" INV (641) = 385.45 IN
18" INV (639) = 385.30 IN
18" INV (644) = 385.30 OUT
TOP OF RIM MATCH PAVEMENT GRADE

643 STA 628+02 14.0 LT TO 628+02 8.0 LT
CONST. CB +02, 14' LT ALONG CURBLINE
CONST. 3 LF x 18" RCP, CLASS III
18" INV (644) = 385.10 OUT
TOP OF GRATE 0.1 FT BELOW GUTTERLINE

644 STA 628+02 8.0 LT TO 630+31 8.0 LT
CONST. MH +02, 8' LT
CONST. 226 LF x 18" RCP, CLASS III
18" INV (643) = 384.9 IN
18" INV (642) = 384.75 IN
18" INV (646) = 384.75 OUT
TOP OF RIM MATCH PAVEMENT GRADE

645 STA 630+31 14.0 LT TO 630+31 8.0 LT
CONST. CB +31, 14' LT ALONG CURBLINE
CONST. 3 LF x 18" RCP, CLASS III
18" INV (646) = 383.50 OUT
TOP OF GRATE 0.1 FT BELOW GUTTERLINE

646 STA 630+31 8.0 LT TO 631+54 4.0 LT
CONST. MH +31, 8' LT
CONST. 120 LF x 18" RCP
18" INV (645) = 383.40 IN
18" INV (644) = 383.40 IN
18" INV (650) = 383.40 OUT
TOP OF RIM MATCH PAVEMENT GRADE

647 STA 630+19 25 RT TO 630+24 21.0 RT
CONST. CB +19, 25' RT ALONG CURBLINE
CONST. 3 LF x 18" RCP, CLASS III
18" INV (648) = 383.53 OUT
TOP OF GRATE 0.1 FT BELOW GUTTERLINE

648 STA 630+24 21 RT
CONST. MH +24, 21' RT OVER EXISTING 18" RCP
18" INV (647) = 383.50 IN
18" INV (EX) = 380.22 IN
18" INV (EX) = 380.22 OUT
TOP OF RIM MATCH PAVEMENT GRADE

649 STA 631+55 19 LT TO 5 LT
CONST. CB +55, 19' LT ALONG CURBLINE
CONST. 12 LF x 18" RCP , CLASS III
18" INV (650) = 382.74 OUT
TOP OF GRATE 0.1 FT BELOW GUTTERLINE

650 STA 631+54 5 LT TO 19 RT
CONST. MH +54, 5" LT
CONST. 56 LF x 18" RCP, CLASS III
18" INV (651) = 382.70 IN
18" INV (646) = 382.70 IN
18" INV (649) = 382.70 IN
18" INV (051) = 382.70 OUT
TOP OF RIM MATCH PAVEMENT GRADE

651 STA 631+51 48 RT TO 631+54 5.0 LT
CONST. CB +51, 48' RT ALONG CURBLINE
CONST. 50 LF x 18" RCP, CLASS III
18" INV (650) = 383.20 OUT
TOP OF GRATE 0.1 FT BELOW GUTTERLINE

652 STA 804+23 27.00 RT TO 631+51 48 RT
CONST. CB +23, 27' RT ALONG CURBLINE
CONST. 174 LF x 18" RCP, CLASS III
18" INV (651) = 383.90 out
TOP OF GRATE 0.1 FT BELOW GUTTERLINE

45 STA 800+78 2.00 LT
EXISTING DMH +78, 2' LT
48" INV (ex)= 369.8 IN
18" INV (ex)= 376.4 IN
12" INV (ex)= 378.2 IN
18" INV (047)= 376.0 IN
48" INV (ex)= 369.80 OUT
Rim= MATCH PAVEMENT GRADE

46 STA 800+95 16.0 RT TO 800+90 11.0 RT
CONST. CB +95, 16' RT ALONG CURBLINE
Modify EXISTING CB TO DMH
CONST 4 LF x 18" RCP, CLASS III
18" INV (EX CB) = 376.60 OUT
TOP OF GRATE 0.1' BELOW GUTTERLINE

47 STA 800+86 17.00 LT TO 800+79 2.0 LT
CONST CB +86, 17' LT ALONG CURBLINE
CONST 15 LF x 18" RCP, CLASS III
18" INV (045) = 377.00 OUT
TOP OF GRATE 0.1' BELOW GUTTERLINE

48A STA 801+92 3.00 LT
EXISTING DMH +92, 3' LT
36" INV (ex)= 374.10 IN
18" INV (048)= 380.00 IN
48" INV (ex)= 372.80 OUT
Rim= MATCH PAVEMENT GRADE

48 STA 802+00 29.00 RT TO 801+93 3.0 LT
CONST. CB +00, 29' RT ALONG CURBLINE
CONST. 31 LF x 18" RCP, CLASS III
18" INV (EX) = 381.75 IN
18" INV (EX) = 381.50 OUT
TOP OF GRATE 0.1' BELOW GUTTERLINE

49 STA 802+61 46.00 RT TO 802+00 29.0 RT
CONST. CB +61, 46' RT ALONG CURBLINE
CONST 60 LF x 18" RCP, CLASS III
18" INV (048) = 382.4 OUT
TOP OF GRATE 0.1' BELOW GUTTERLINE

50 STA 803+01 12.00 LT TO 803+00 8.0 RT
CONST. CB +01, 12" LT ALONG CURBLINE
CONST. 20 LF x 18" RCP, CLASS III
18" INV (051) = 384.95 OUT
TOP OF GRATE 389.00

51 STA 803+00 8.00 RT
CONST. MH +00, 8' RT OVER EXIST. 36" RCP
18" INV (050) = 384.8 IN
18" INV (650) = 379.95 IN
36" INV (EX) = 376.3 IN
36" INV (EX) = 376.3 OUT
TOP OF RIM MATCH PAVEMENT GRADE

53 STA 805+25 23.00 RT TO 805+12 3.0 RT
CONST CB +25, 23' RT ALONG CURBLINE
REMOVE & SALVAGE EXISTING CB AND PIPE TO CITY
CONST. 24 LF X 18" RCP CLASS III
18" INV = 393.60 OUT
TOP OF GRATE 0.1' BELOW GUTTERLINE

54 STA 805+42 13.00 LT TO 805+12 3.0 RT
CONST Shallow CB +42, 13' LT ALONG CURBLINE
REMOVE & SALVAGE EXISTING CB AND PIPE TO CITY
CONST. 36 LF X 18" RCP CLASS III
18" INV = 393.70 OUT
TOP OF GRATE 0.1' BELOW GUTTERLINE

55 STA 805+12 3.0 RT
EXISTING DMH +12, 3' RT
42" INV (EX)= 391.40 IN
18" INV (53)= 393.40 IN
18" INV (54)= 393.40 IN
36" INV (EX)= 391.70 OUT
TOP OF RIM MATCH PAVEMENT GRADE

FEDERAL STREET & LOWER NEWTON STREET

PROJECT NAME: ST. ALBANS
PROJECT NUMBER: HPP 8000(17)

FILE NAME: 57414_TYP.dgn
PROJECT LEADER: M.A. COLGAN
DESIGNED BY: D.M. PECK
DRAINAGE NOTES (SHEET 7 OF 7)
PLOT DATE: 3/4/2016
DRAWN BY: DMP / WAD
CHECKED BY: G.L. BAKOS
SHEET 76 OF 230

VHB 57414.00

MATCHLINE STA. 101+85

STATION 100+22
BEGIN PROJECT
HPP 8000(17)

STA. 899+00
BEGIN APPROACH

S. MAIN ST. (US 7)

NASON ST. CONNECTOR

101+00

N/F KELLEY

N/F BESSERY TOWERS

N/F OUELLETTE

VT STATE PLANE GRID

Approximate Exist. R.O.W.

899+00 900+00 901+00 902+00 903+00 904+00

3002+00

3001+00

3000+00

STA. 904+25
END APPROACH

ST. ALBANS STATE HWY
(I-89 ACCESS)

LEDGE OUTCROP

STA. 3000+50
BEGIN APPROACH

100

0 20 40
SCALE IN FEET

PROJECT NAME: ST. ALBANS	
PROJECT NUMBER: HPP 8000(17)	
FILE NAME: 57414_BDR_NUI_UT.dgn	PLOT DATE: 3/4/2016
PROJECT LEADER: J. D. SALADINO	DRAWN BY: C.J. HAKEY
DESIGNED BY: D. M. PECK	CHECKED BY: ------
GENERAL PLANS (1 OF 17)	SHEET 77 OF 230

VHB 57414.00

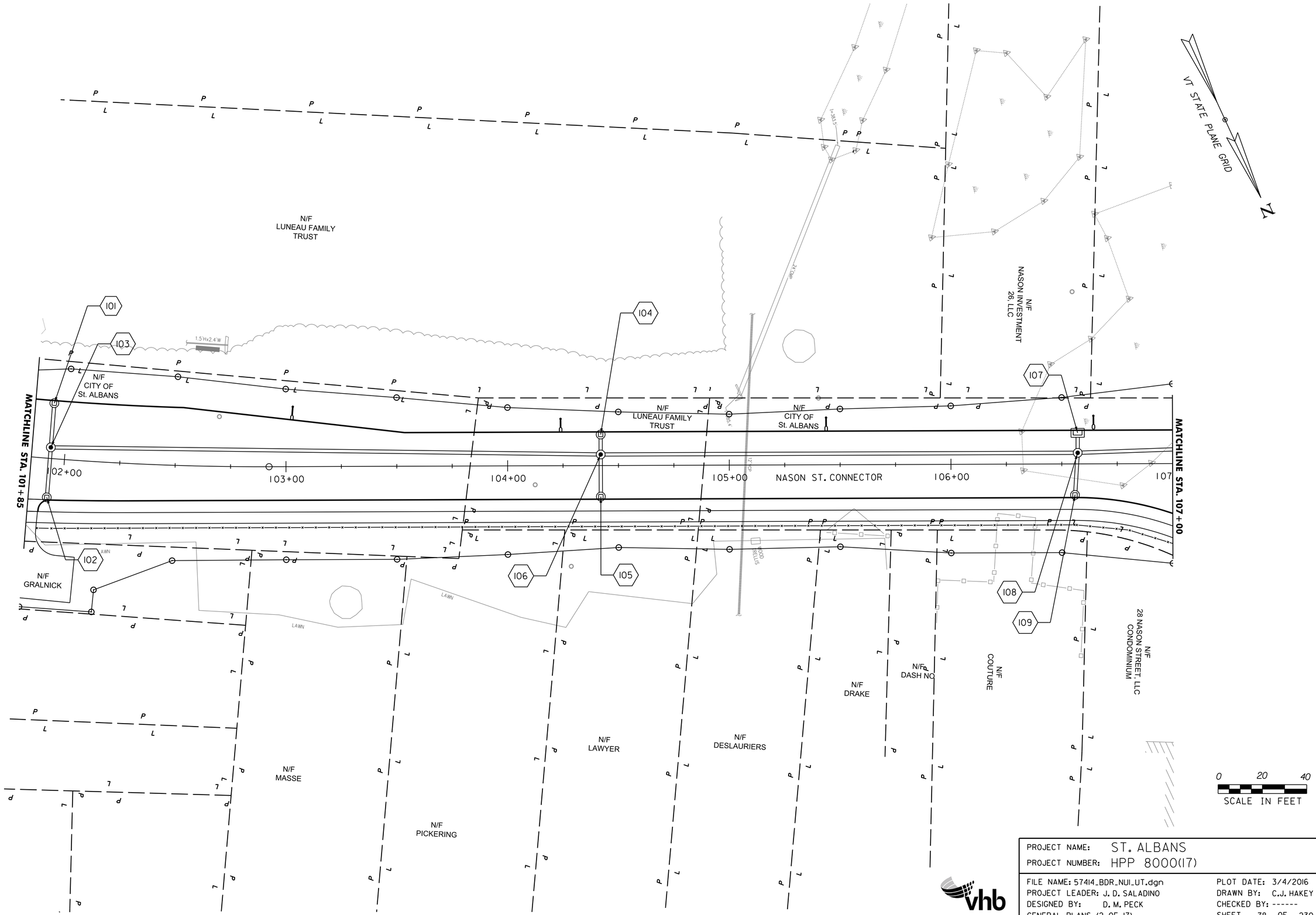

PROJECT NAME: ST. ALBANS	
PROJECT NUMBER: HPP 8000(17)	
FILE NAME: 57414_BDR_NUI_UT.dgn	PLOT DATE: 3/4/2016
PROJECT LEADER: J. D. SALADINO	DRAWN BY: C.J. HAKEY
DESIGNED BY: D. M. PECK	CHECKED BY: ------
GENERAL PLANS (2 OF 17)	SHEET 78 OF 230

VHB 57414.00

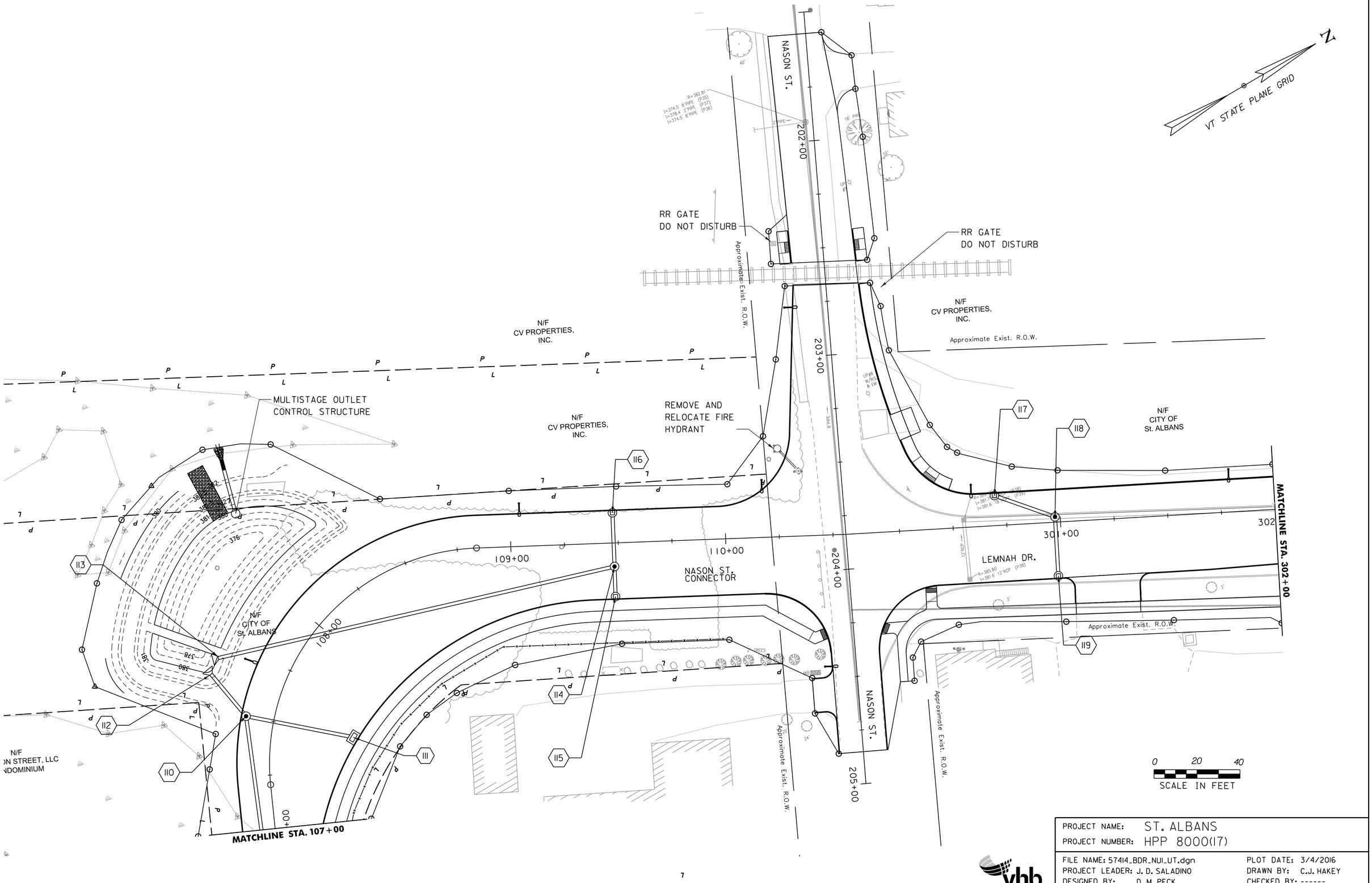

PROJECT NAME: ST. ALBANS	
PROJECT NUMBER: HPP 8000(17)	
FILE NAME: 57414_BDR_NUI_UT.dgn	PLOT DATE: 3/4/2016
PROJECT LEADER: J. D. SALADINO	DRAWN BY: C.J. HAKEY
DESIGNED BY: D. M. PECK	CHECKED BY: ------
GENERAL PLANS (3 OF 17)	SHEET 79 OF 230

VHB 57414.00

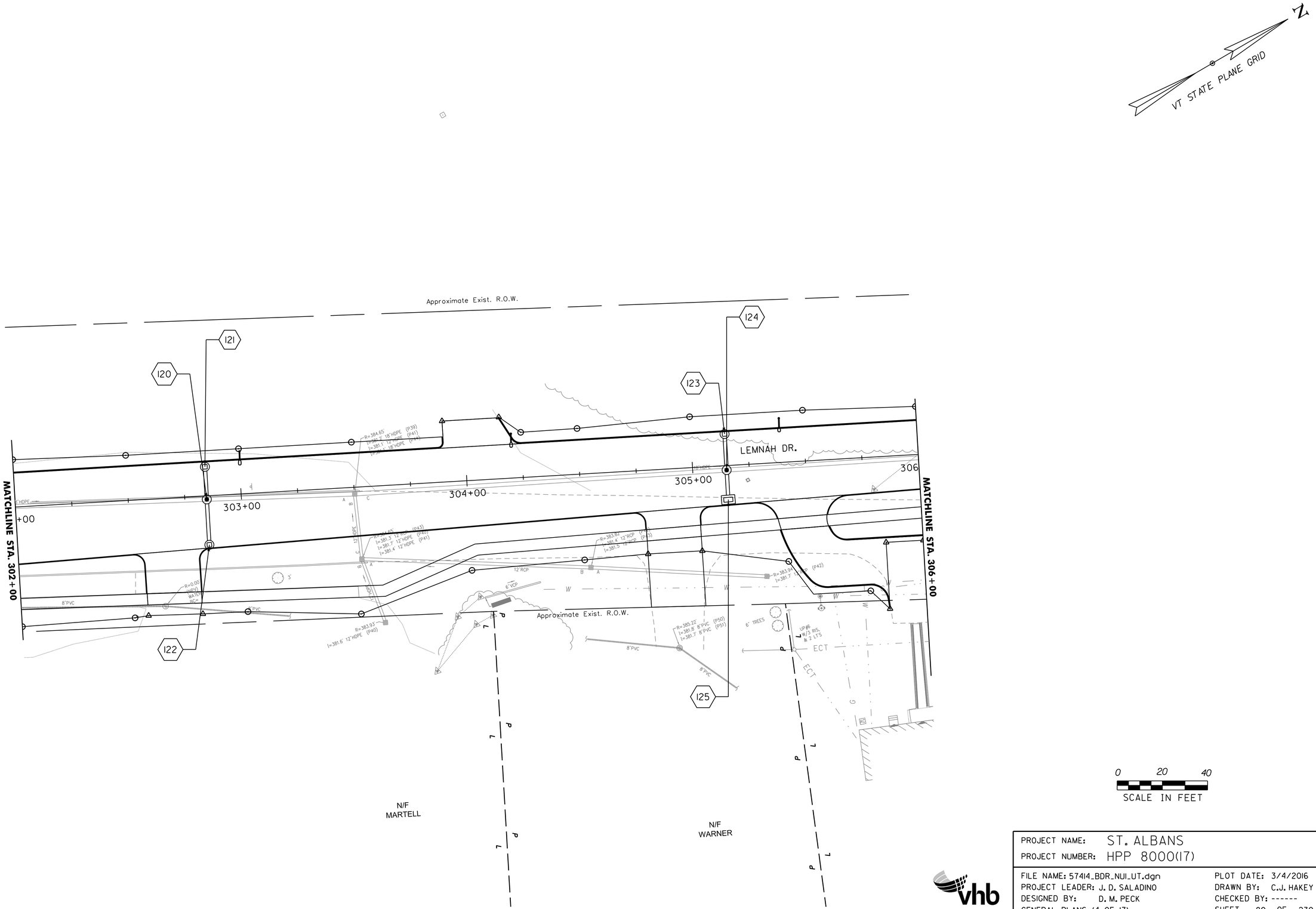

PROJECT NAME: ST. ALBANS	
PROJECT NUMBER: HPP 8000(17)	
FILE NAME: 57414_BDR_NUI_UT.dgn	PLOT DATE: 3/4/2016
PROJECT LEADER: J. D. SALADINO	DRAWN BY: C.J. HAKEY
DESIGNED BY: D. M. PECK	CHECKED BY: ------
GENERAL PLANS (4 OF 17)	SHEET 80 OF 230

VHB 57414.00

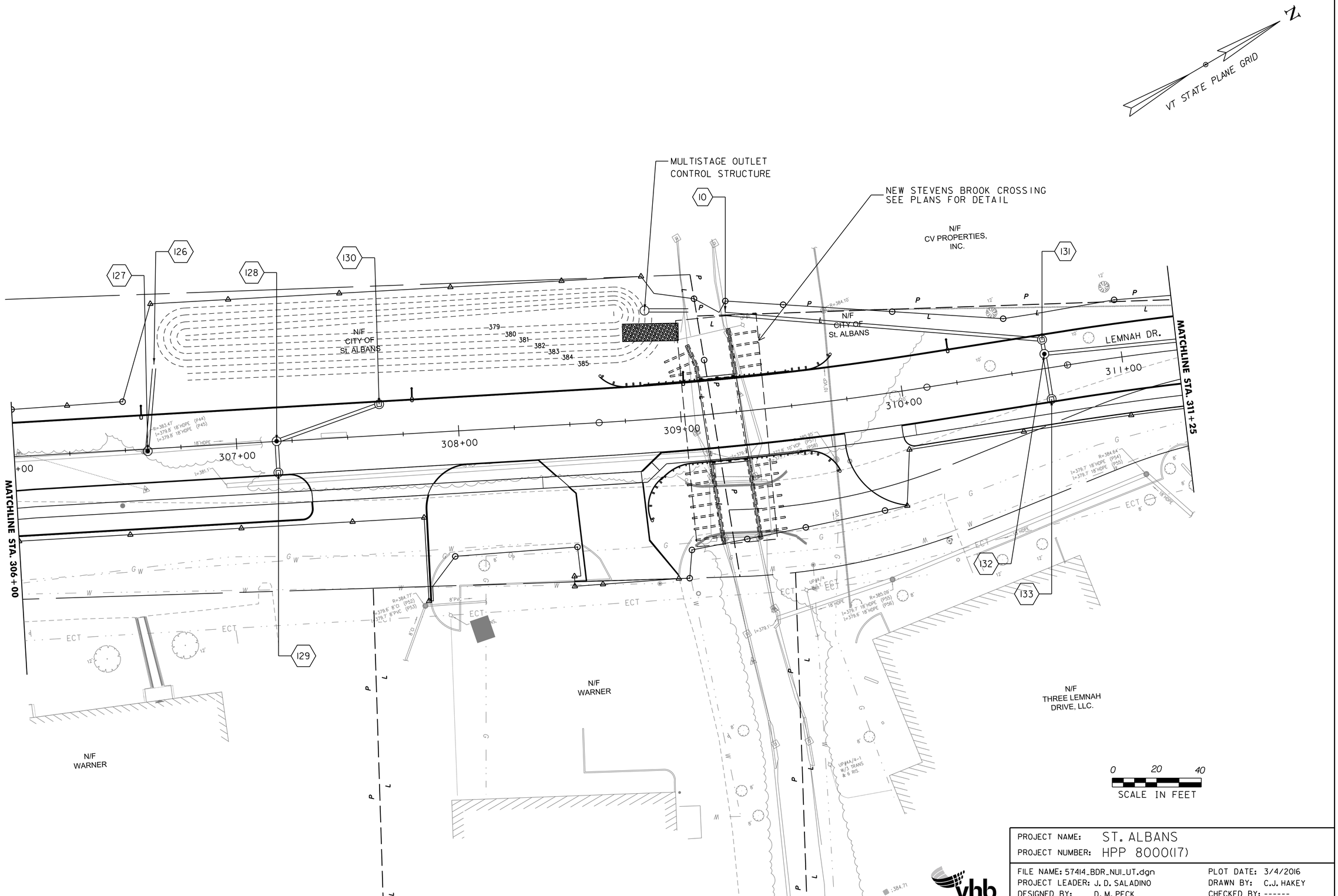

PROJECT NAME: ST. ALBANS	
PROJECT NUMBER: HPP 8000(17)	
FILE NAME: 57414_BDR_NUI_UT.dgn	PLOT DATE: 3/4/2016
PROJECT LEADER: J. D. SALADINO	DRAWN BY: C.J. HAKEY
DESIGNED BY: D. M. PECK	CHECKED BY: ------
GENERAL PLANS (5 OF 17)	SHEET 81 OF 230

VHB 57414.00

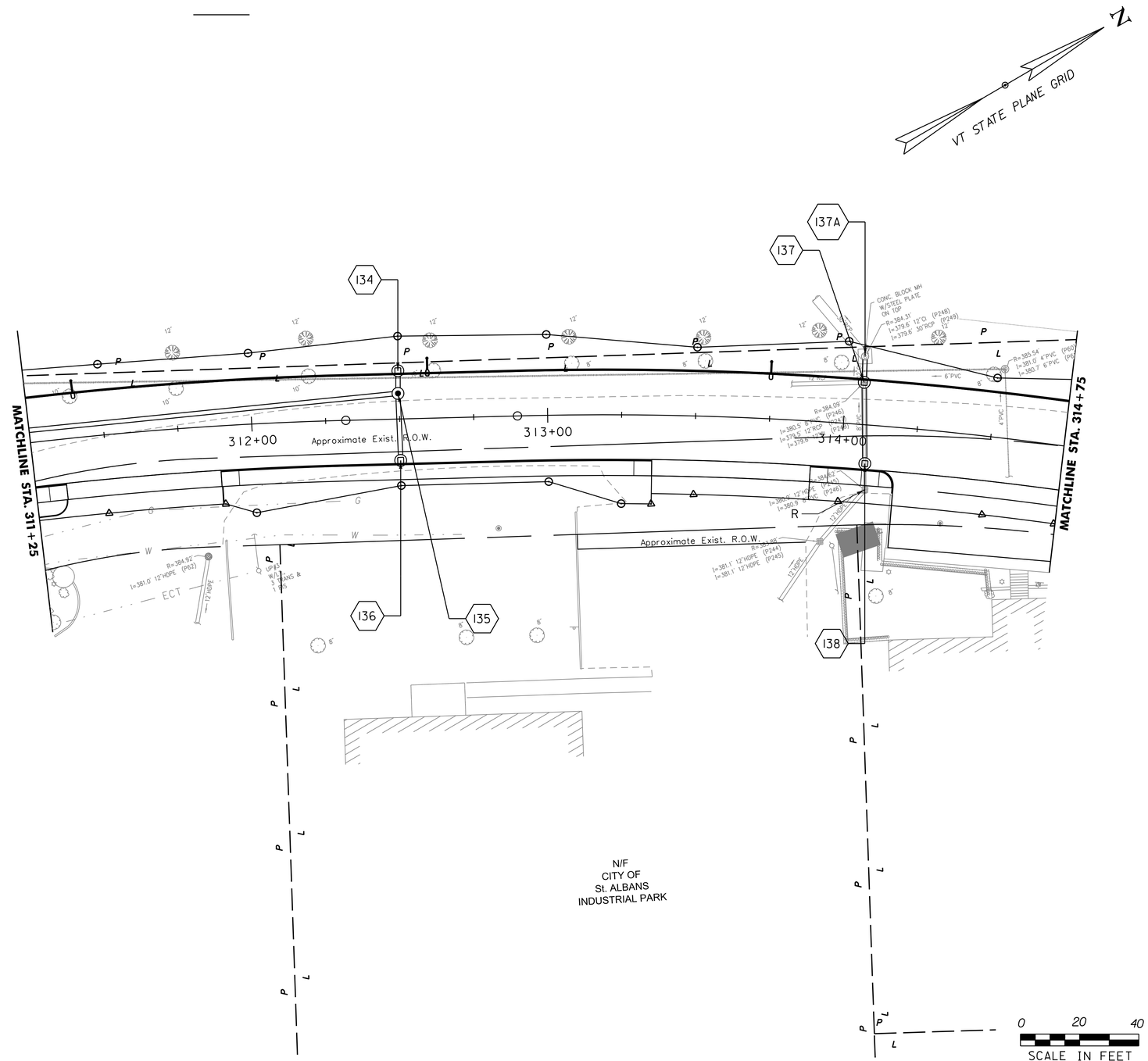

PROJECT NAME: ST. ALBANS	
PROJECT NUMBER: HPP 8000(17)	
FILE NAME: 57414_BDR_NUI_UT.dgn	PLOT DATE: 3/4/2016
PROJECT LEADER: J. D. SALADINO	DRAWN BY: C.J. HAKEY
DESIGNED BY: D. M. PECK	CHECKED BY: ------
GENERAL PLANS (6 OF 17)	SHEET 82 OF 230

VHB 57414.00

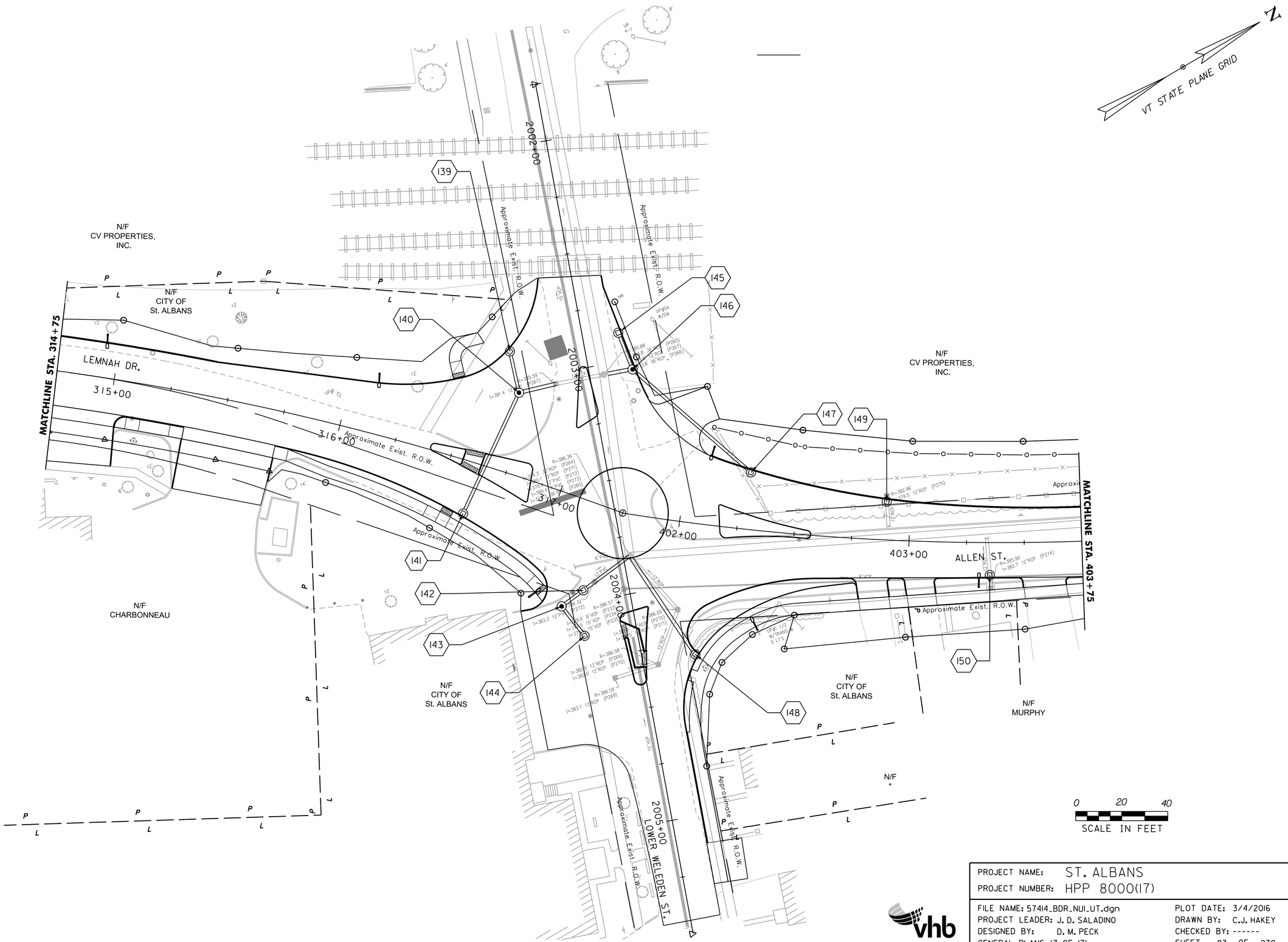

PROJECT NAME: ST. ALBANS
PROJECT NUMBER: HPP 8000(17)

FILE NAME: 57414_BDR_NUI_UT.dgn
PROJECT LEADER: J. D. SALADINO
DESIGNED BY: D. M. PECK
GENERAL PLANS (7 OF 17)

PLOT DATE: 3/4/2016
DRAWN BY: C.J. HAKEY
CHECKED BY: ------
SHEET 83 OF 230

VHB 57414.00

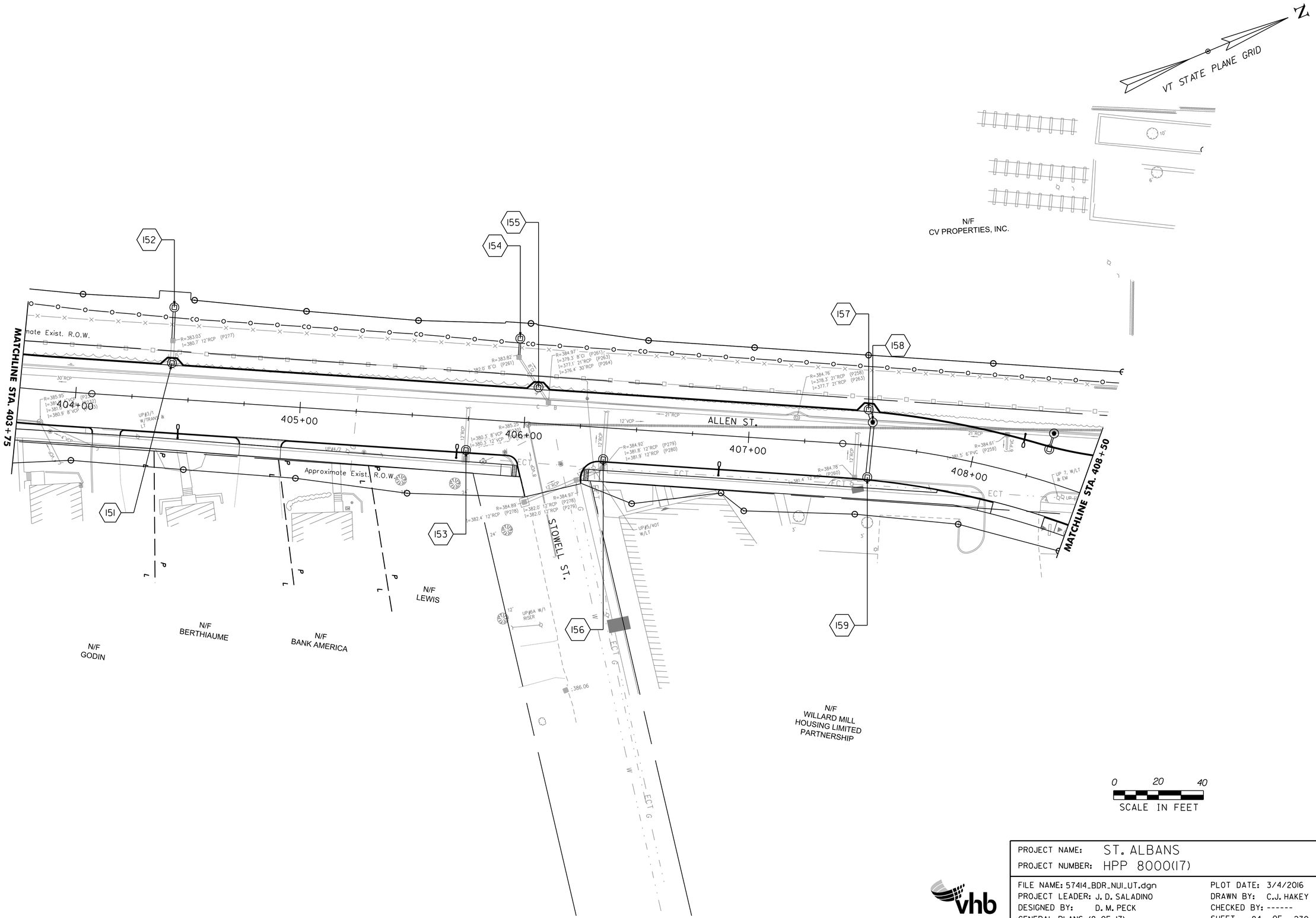

PROJECT NAME: ST. ALBANS	
PROJECT NUMBER: HPP 8000(17)	
FILE NAME: 57414_BDR_NUI_UT.dgn	PLOT DATE: 3/4/2016
PROJECT LEADER: J. D. SALADINO	DRAWN BY: C.J. HAKEY
DESIGNED BY: D. M. PECK	CHECKED BY: ------
GENERAL PLANS (8 OF 17)	SHEET 84 OF 230

VHB 57414.00

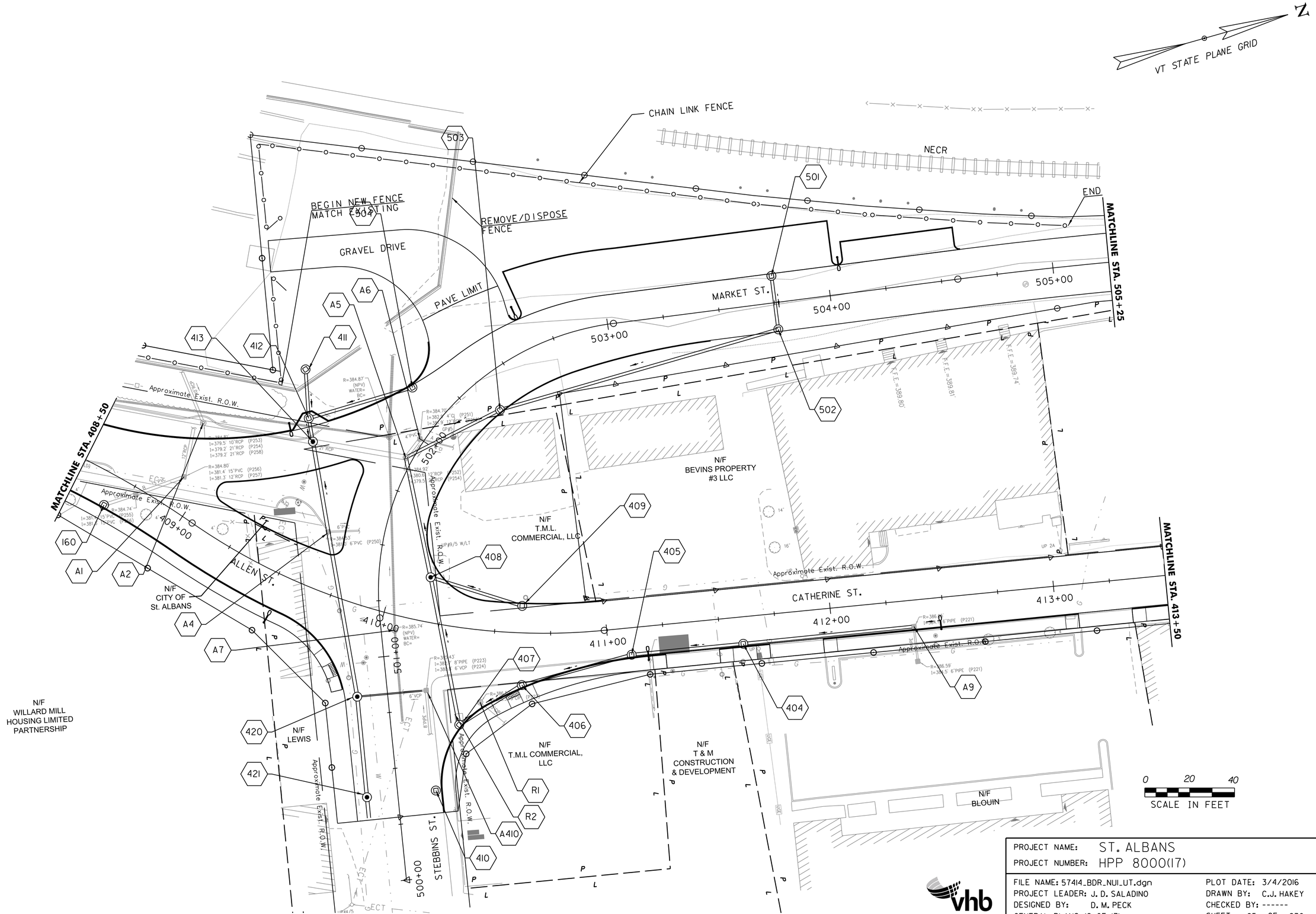

PROJECT NAME: ST. ALBANS	
PROJECT NUMBER: HPP 8000(17)	
FILE NAME: 57414_BDR_NUI_UT.dgn	PLOT DATE: 3/4/2016
PROJECT LEADER: J. D. SALADINO	DRAWN BY: C.J. HAKEY
DESIGNED BY: D. M. PECK	CHECKED BY: ------
GENERAL PLANS (9 OF 17)	SHEET 85 OF 230

VHB 57414.00

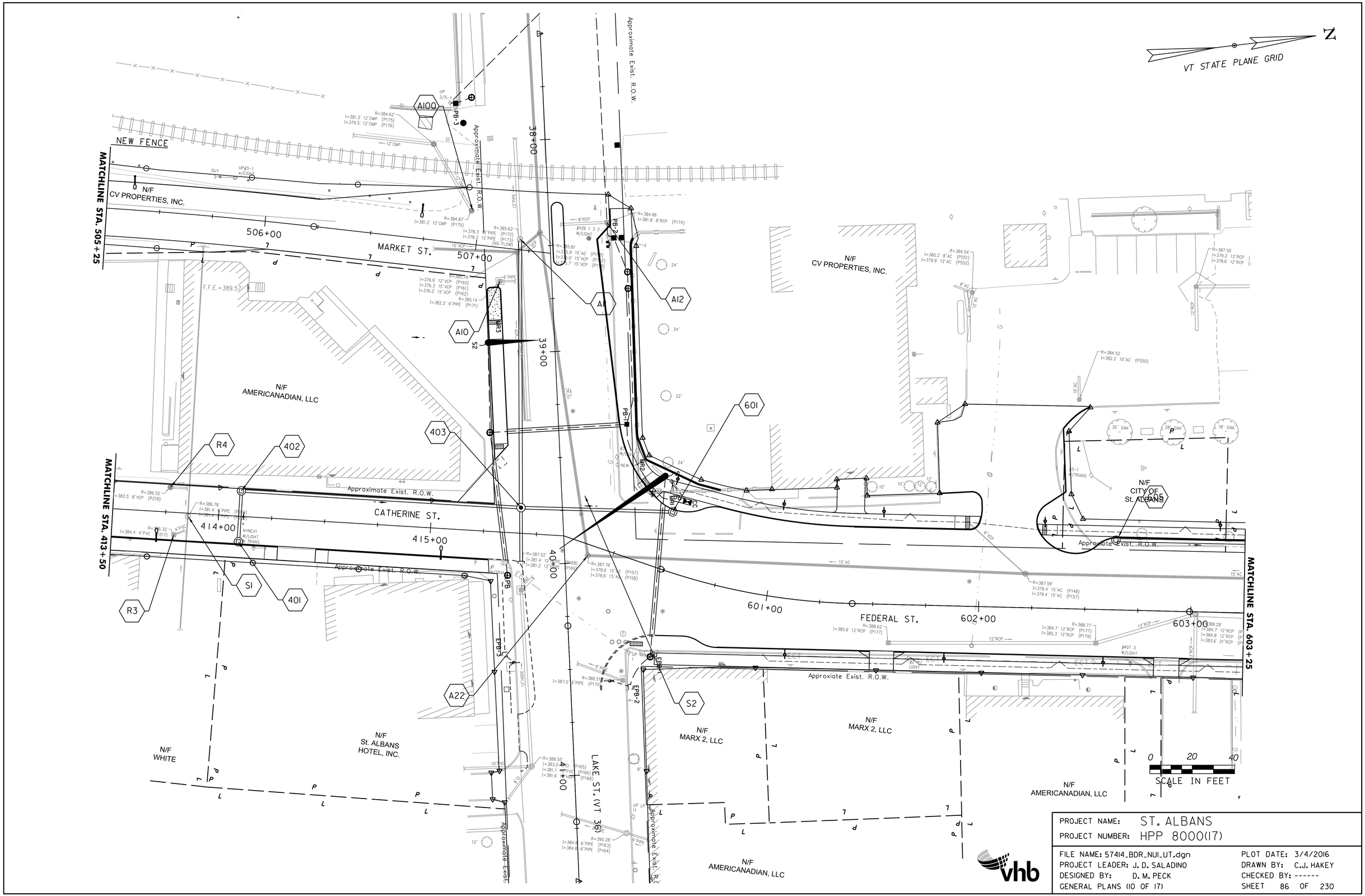

PROJECT NAME:	ST. ALBANS
PROJECT NUMBER:	HPP 8000(17)

FILE NAME: 57414_BDR_NUI_UT.dgn	PLOT DATE: 3/4/2016
PROJECT LEADER: J. D. SALADINO	DRAWN BY: C.J. HAKEY
DESIGNED BY: D. M. PECK	CHECKED BY: ------
GENERAL PLANS (10 OF 17)	SHEET 86 OF 230

VHB 57414.00

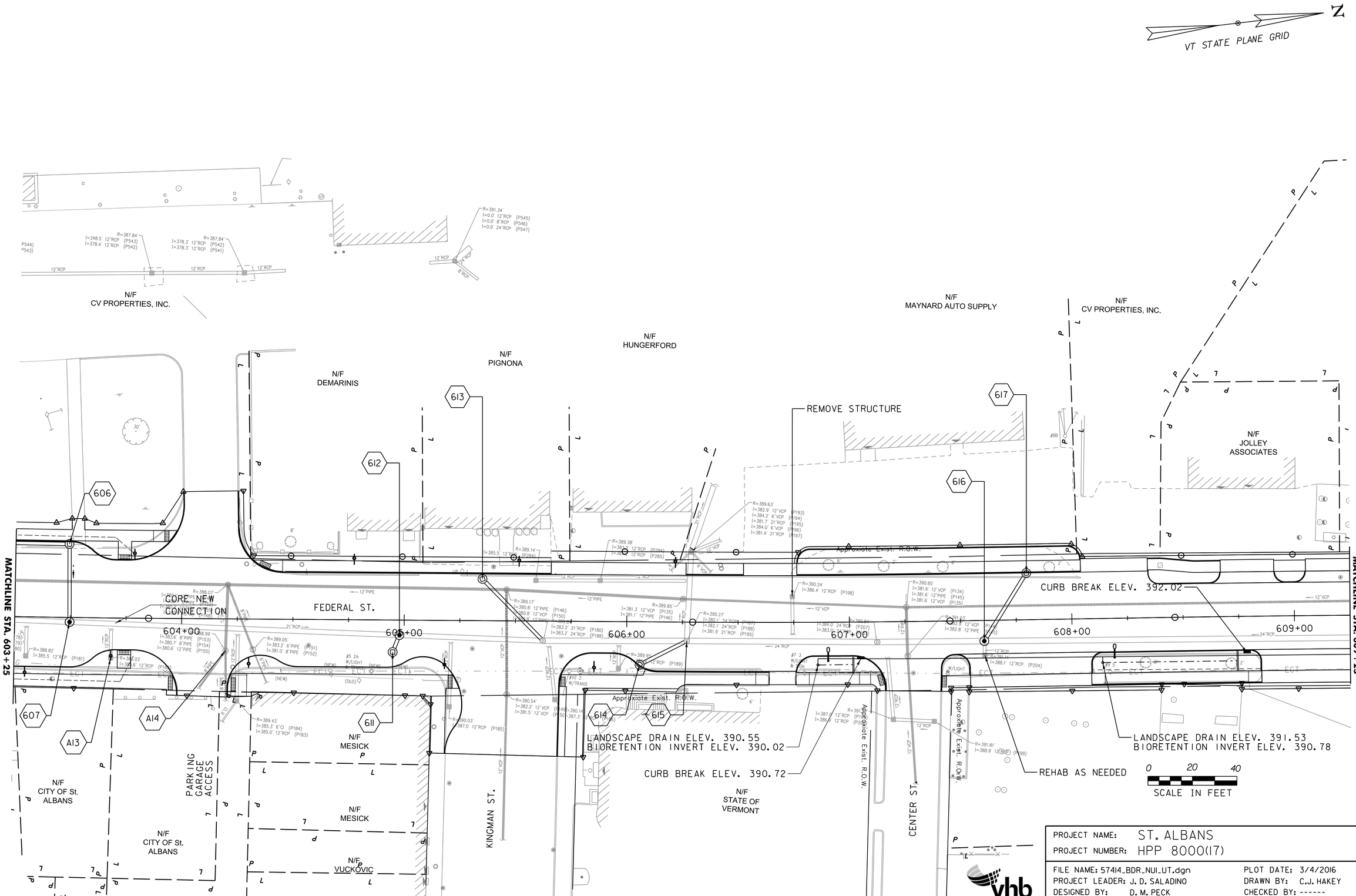

PROJECT NAME: ST. ALBANS	
PROJECT NUMBER: HPP 8000(17)	
FILE NAME: 57414_BDR_NUI_UT.dgn	PLOT DATE: 3/4/2016
PROJECT LEADER: J. D. SALADINO	DRAWN BY: C.J. HAKEY
DESIGNED BY: D. M. PECK	CHECKED BY: ------
GENERAL PLANS (11 OF 17)	SHEET 87 OF 230

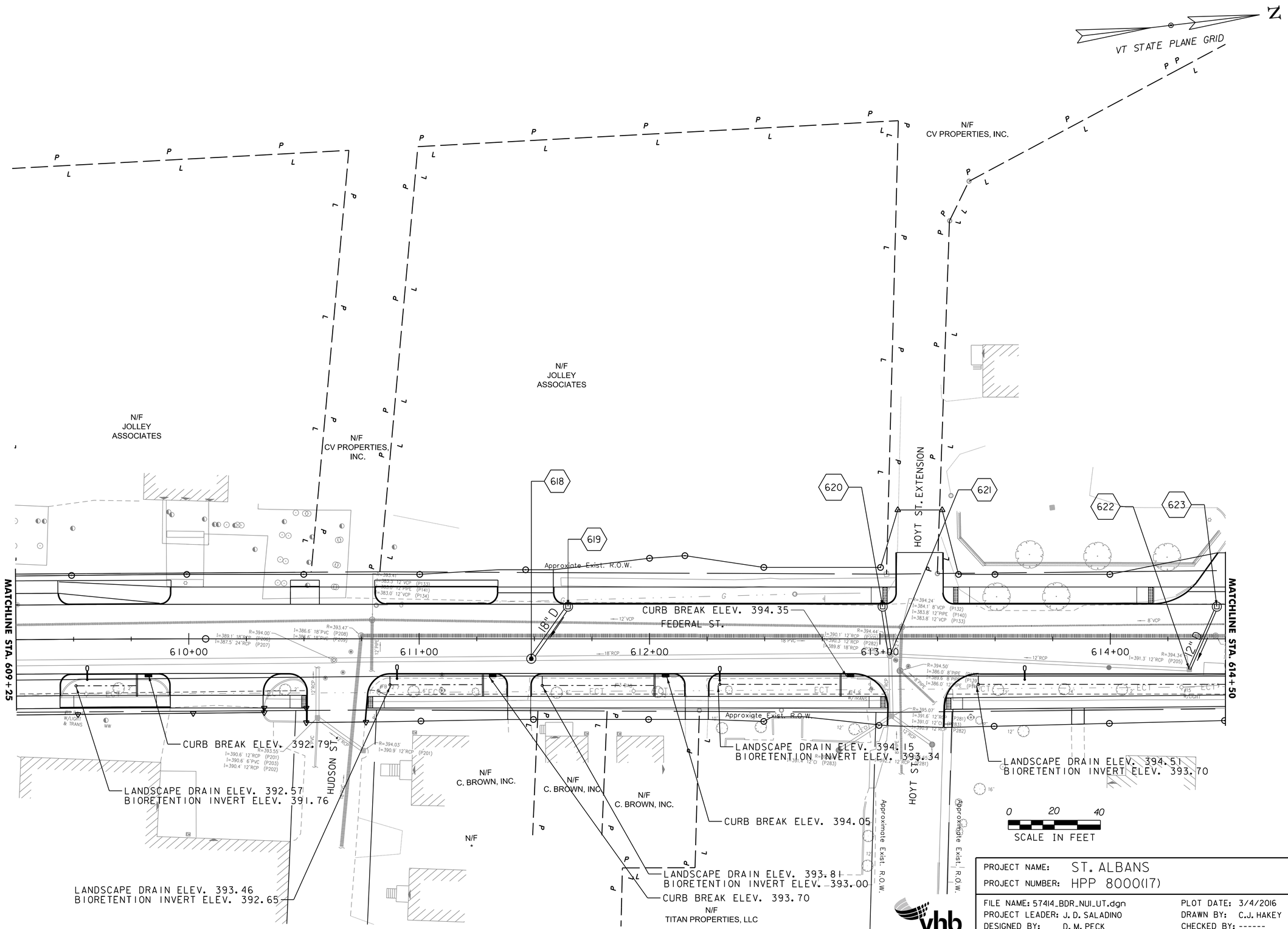

PROJECT NAME: ST. ALBANS	
PROJECT NUMBER: HPP 8000(17)	
FILE NAME: 57414_BDR_NUI_UT.dgn	PLOT DATE: 3/4/2016
PROJECT LEADER: J. D. SALADINO	DRAWN BY: C.J. HAKEY
DESIGNED BY: D. M. PECK	CHECKED BY: ------
GENERAL PLANS (12 OF 17)	SHEET 88 OF 230

vhb

VHB 57414.00

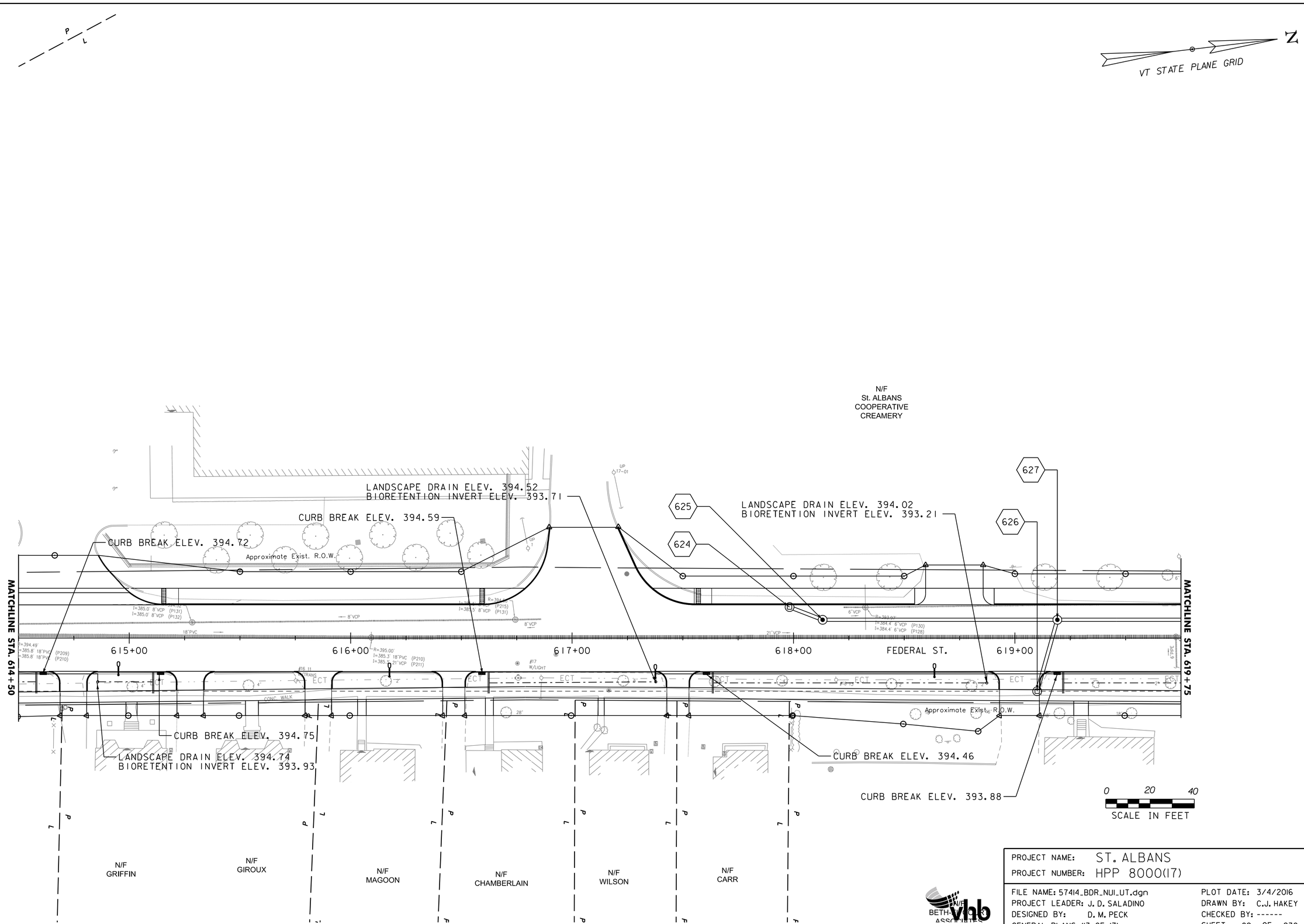

PROJECT NAME: ST. ALBANS	
PROJECT NUMBER: HPP 8000(17)	
FILE NAME: 57414_BDR_NUI_UT.dgn	PLOT DATE: 3/4/2016
PROJECT LEADER: J. D. SALADINO	DRAWN BY: C.J. HAKEY
DESIGNED BY: D. M. PECK	CHECKED BY: ------
GENERAL PLANS (13 OF 17)	SHEET 89 OF 230

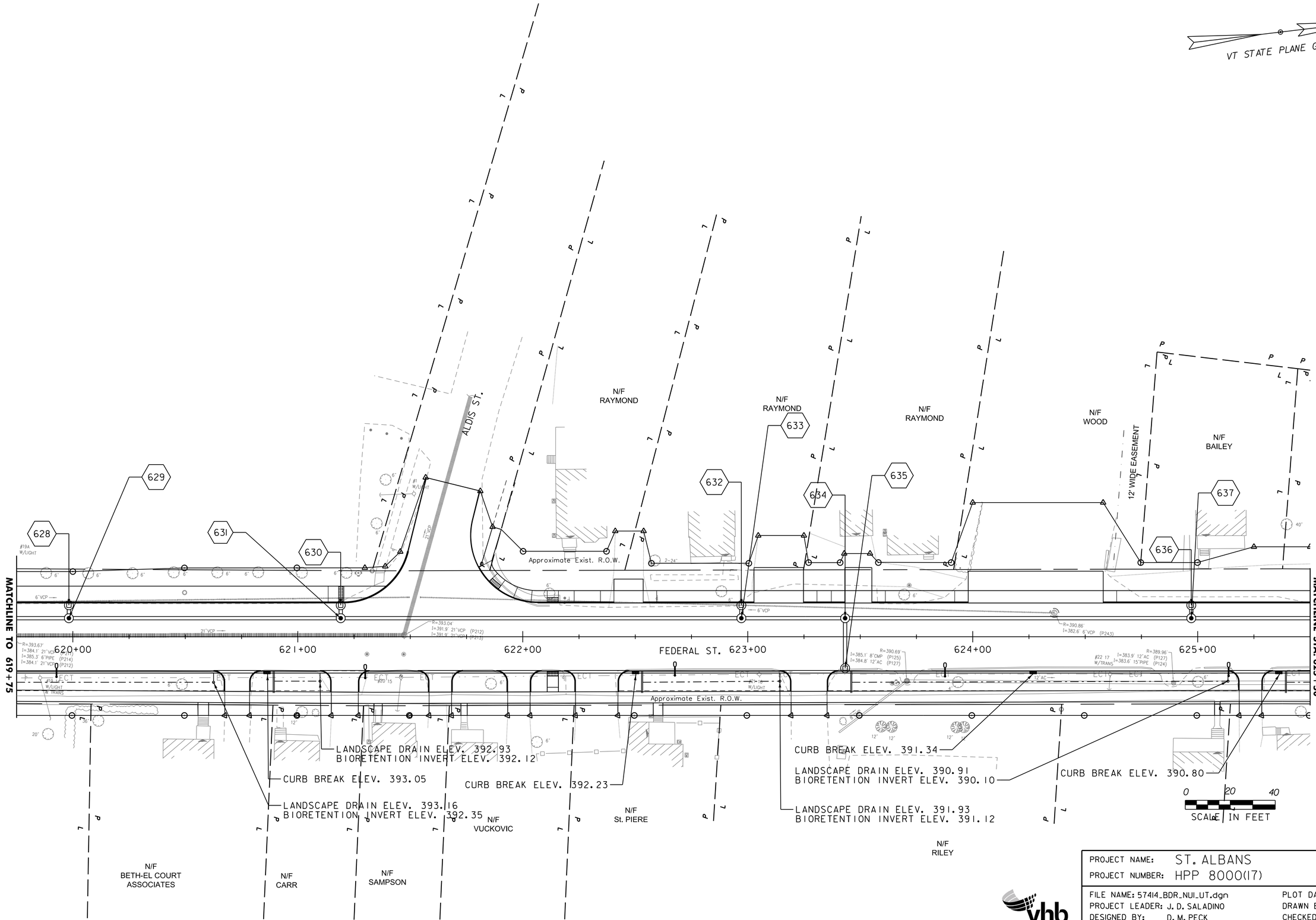

PROJECT NAME: ST. ALBANS
PROJECT NUMBER: HPP 8000(17)

FILE NAME: 57414_BDR_NUI_UT.dgn
PROJECT LEADER: J. D. SALADINO
DESIGNED BY: D. M. PECK
GENERAL PLANS (14 OF 17)

PLOT DATE: 3/4/2016
DRAWN BY: C.J. HAKEY
CHECKED BY: ------
SHEET 90 OF 230

VHB 57414.00

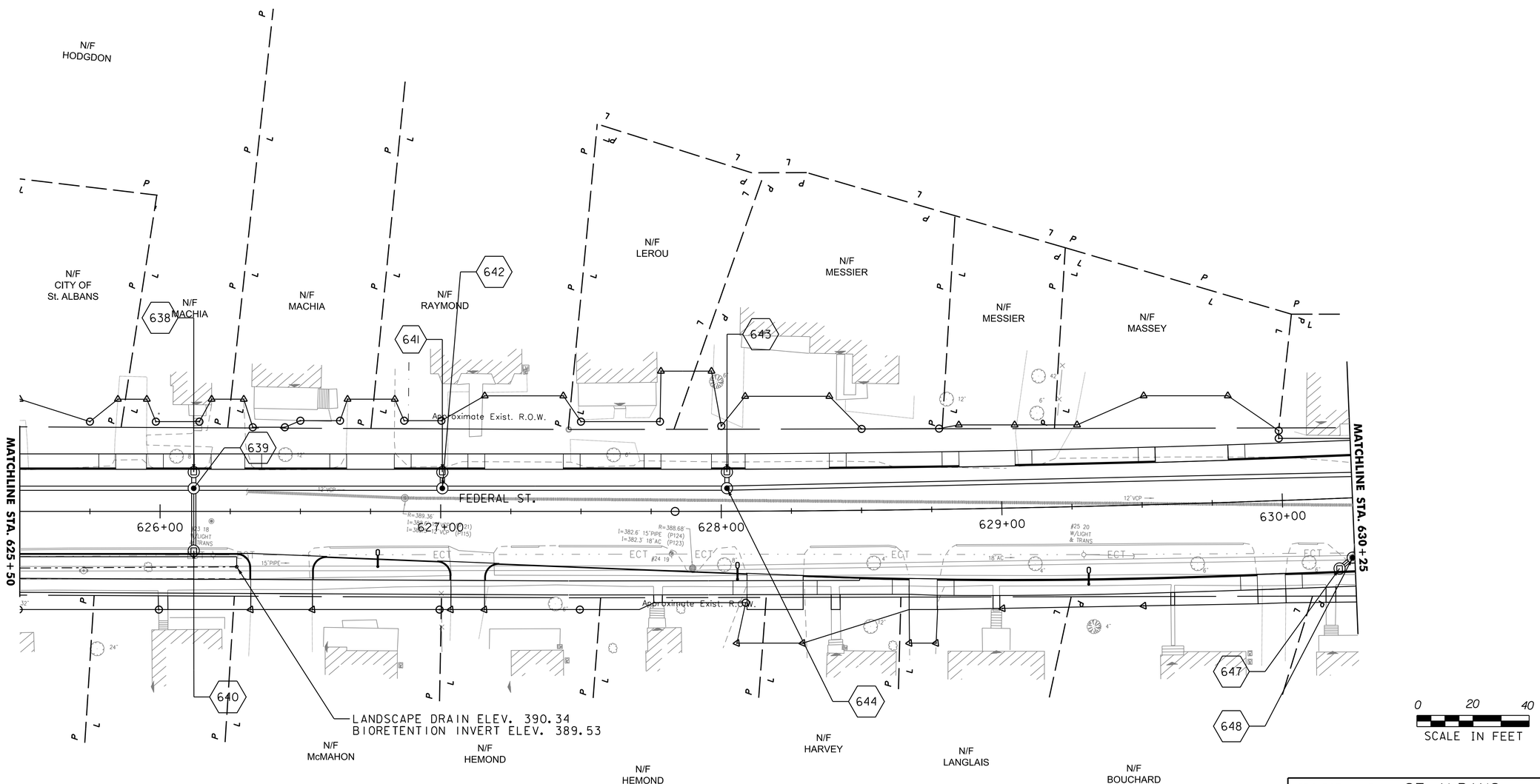

PROJECT NAME:	ST. ALBANS
PROJECT NUMBER:	HPP 8000(17)

FILE NAME: 57414_BDR_NUI_UT.dgn	PLOT DATE: 3/4/2016
PROJECT LEADER: J. D. SALADINO	DRAWN BY: C.J. HAKEY
DESIGNED BY: D. M. PECK	CHECKED BY: ------
GENERAL PLANS (15 OF 17)	SHEET 91 OF 230

vhb

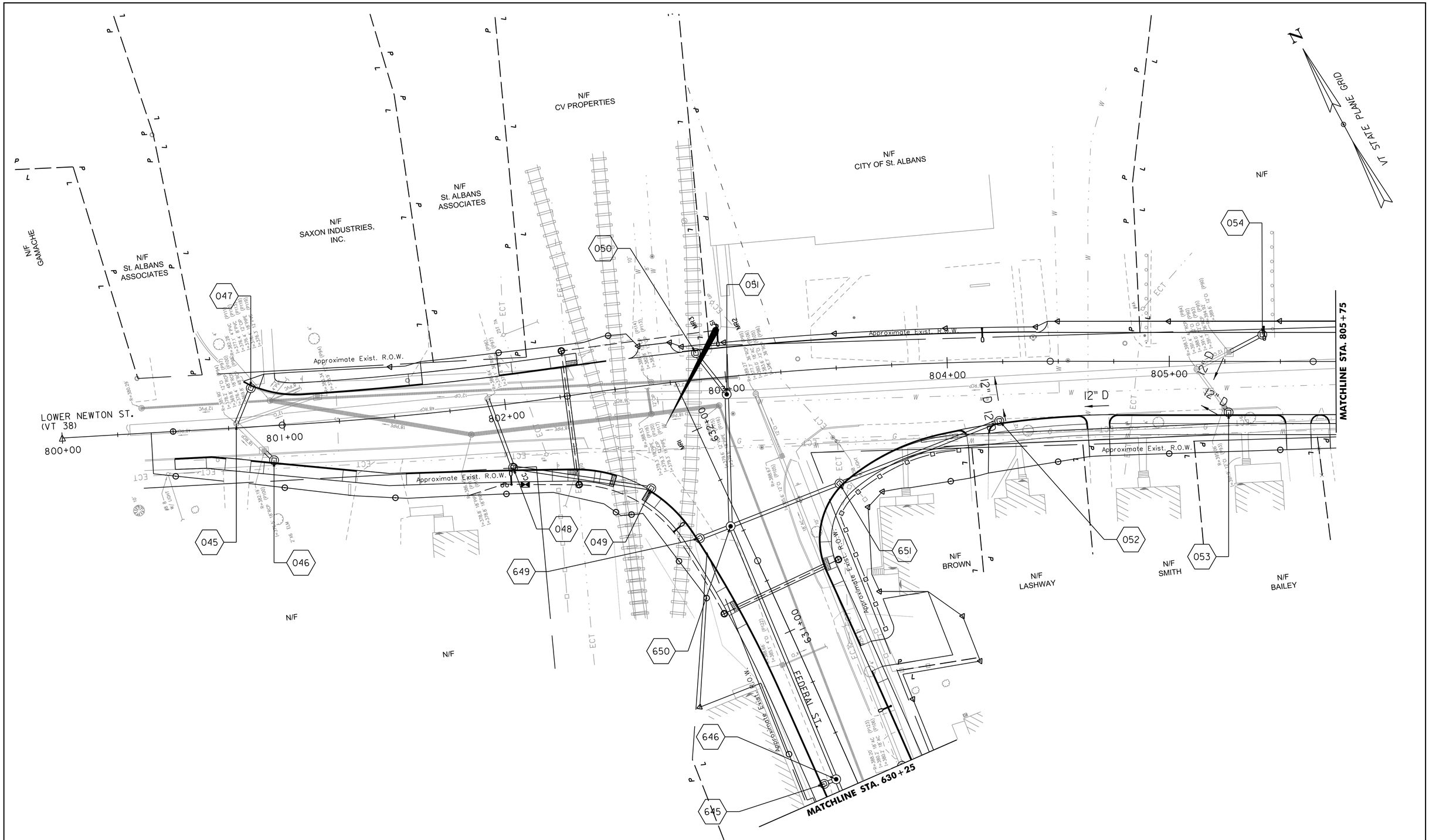

PROJECT NAME: ST. ALBANS	
PROJECT NUMBER: HPP 8000(17)	
FILE NAME: 57414_BDR_NUI_UT.dgn	PLOT DATE: 3/4/2016
PROJECT LEADER: J. D. SALADINO	DRAWN BY: C.J. HAKEY
DESIGNED BY: D. M. PECK	CHECKED BY: ------
GENERAL PLANS (16 OF 17)	SHEET 92 OF 230

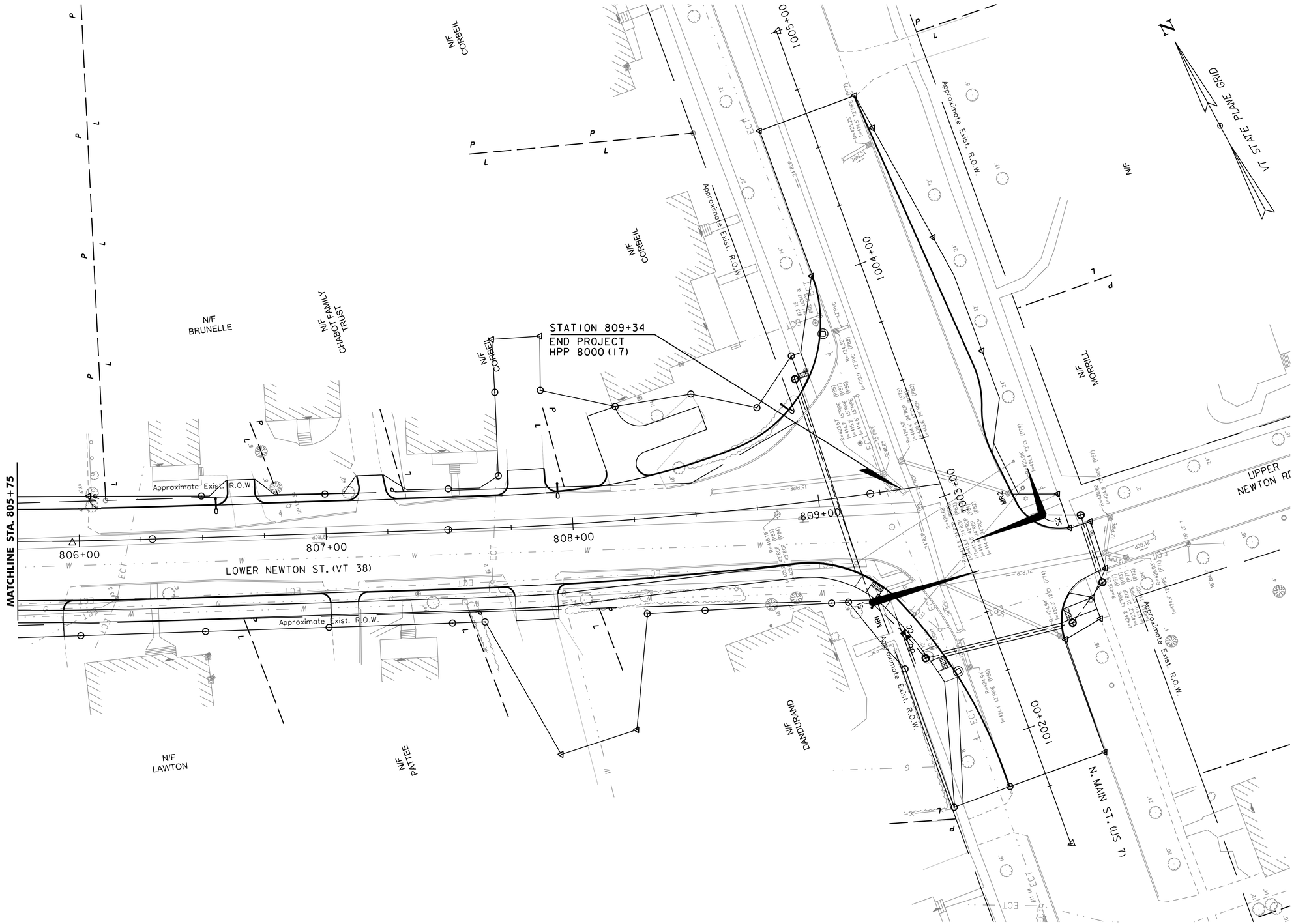

0 20 40
SCALE IN FEET

vhb

PROJECT NAME: ST. ALBANS	
PROJECT NUMBER: HPP 8000(17)	
FILE NAME: 57414_BDR_NUI_UT.dgn	PLOT DATE: 3/4/2016
PROJECT LEADER: J. D. SALADINO	DRAWN BY: C.J. HAKEY
DESIGNED BY: D. M. PECK	CHECKED BY: ------
GENERAL PLANSS (17 OF 17)	SHEET 93 OF 230

VHB 57414.00

CONSTRUCTION NOTES:

DURABLE 4" SINGLE YELLOW LINE
STA. 3000+50 - 3001+59, RT.
STA. 3000+50 - 3001+59, LT.
STA. 100+51 - 101+50, LT. & RT.

DURABLE 4" SINGLE WHITE LINE
STA. 3000+50 - STA. 3001+57, RT.
STA. 3000+50 - STA. 3001+57, RT.
STA. 899+00 - STA. 901+08, RT.
STA. 899+00 - STA. 901+25, RT.
STA. 902+47 - STA. 903+71, LT.
STA. 100+54 - STA. 101+85, LT.
STA. 100+54 - STA. 101+85, LT.
STA. 100+54 - STA. 101+85, RT.

DURABLE 4" DOUBLE YELLOW LINE
STA. 899+20 - 901+29, LT. & RT.
STA. 902+42 - 904+25, LT. & RT.
STA. 101+50 - 101+85, LT. & RT.

DURABLE 24" STOP BAR
STA. 3001+58, RT.
STA. 901+25, RT.
STA. 902+46, LT.
STA. 100+52, LT.

DURABLE CROSSWALK MARKING
STA. 3001+67 - 3001+67, LT. - RT.
STA. 100+37 - 100+47, LT. - RT.

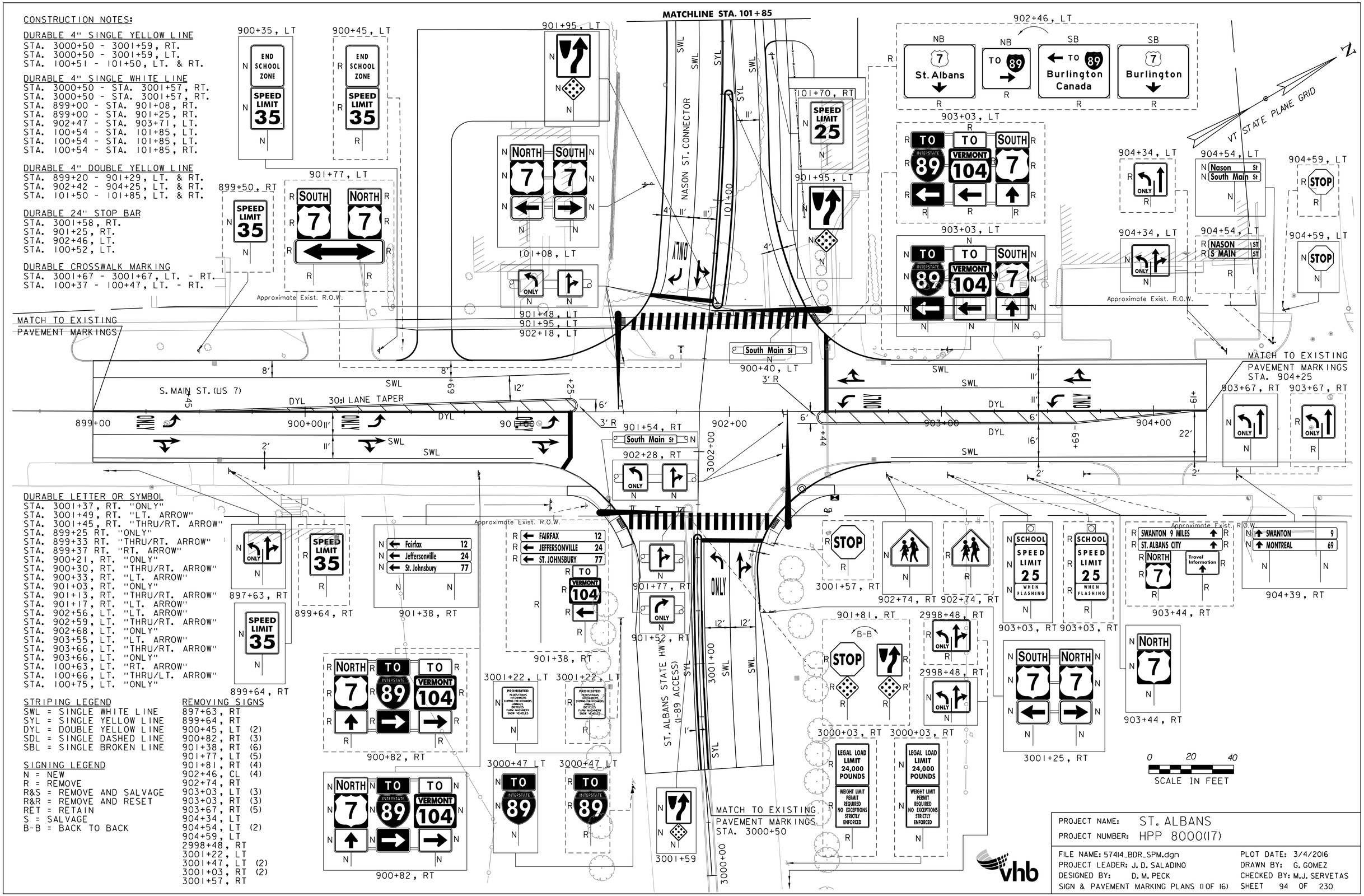

DURABLE LETTER OR SYMBOL
STA. 3001+37, RT. "ONLY"
STA. 3001+49, RT. "LT. ARROW"
STA. 3001+45, RT. "THRU/RT. ARROW"
STA. 899+25 RT. "ONLY"
STA. 899+33 RT. "THRU/RT. ARROW"
STA. 899+37 RT. "RT. ARROW"
STA. 900+21, RT. "ONLY"
STA. 900+30, RT. "THRU/RT. ARROW"
STA. 900+33, RT. "LT. ARROW"
STA. 901+03, RT. "ONLY"
STA. 901+13, RT. "THRU/RT. ARROW"
STA. 901+17, RT. "LT. ARROW"
STA. 902+56, LT. "LT. ARROW"
STA. 902+59, LT. "THRU/RT. ARROW"
STA. 902+68, LT. "ONLY"
STA. 903+55, LT. "LT. ARROW"
STA. 903+66, LT. "THRU/RT. ARROW"
STA. 903+66, LT. "ONLY"
STA. 100+63, LT. "RT. ARROW"
STA. 100+66, LT. "THRU/LT. ARROW"
STA. 100+75, LT. "ONLY"

STRIPING LEGEND
SWL = SINGLE WHITE LINE
SYL = SINGLE YELLOW LINE
DYL = DOUBLE YELLOW LINE
SDL = SINGLE DASHED LINE
SBL = SINGLE BROKEN LINE

SIGNING LEGEND
N = NEW
R = REMOVE
R&S = REMOVE AND SALVAGE
R&R = REMOVE AND RESET
RET = RETAIN
S = SALVAGE
B-B = BACK TO BACK

REMOVING SIGNS
897+63, RT
899+64, RT
900+45, LT (2)
900+82, RT (3)
901+38, RT (6)
901+77, LT (5)
901+81, RT (4)
902+46, CL (4)
902+74, RT
903+03, LT (3)
903+03, RT (3)
903+67, RT (5)
904+34, LT
904+54, LT (2)
904+59, LT
2998+48, RT
3001+22, LT
3001+47, LT (2)
3001+03, RT (2)
3001+57, RT

PROJECT NAME: ST. ALBANS	
PROJECT NUMBER: HPP 8000(17)	
FILE NAME: 57414_BDR_SPM.dgn	PLOT DATE: 3/4/2016
PROJECT LEADER: J. D. SALADINO	DRAWN BY: G. GOMEZ
DESIGNED BY: D. M. PECK	CHECKED BY: M.J. SERVETAS
SIGN & PAVEMENT MARKING PLANS (1 OF 16)	SHEET 94 OF 230

VHB 57414.00

CONSTRUCTION NOTES:

DURABLE 4" SINGLE YELLOW LINE
STA. 101+75 - 102+92, LT. & RT.

DURABLE 4" SINGLE WHITE LINE
STA. 101+85 - 102+53, LT.
STA. 101+85 - 107+00, LT. & RT.

DURABLE 4" DOUBLE YELLOW LINE
STA. 101+85 - 102+52, LT. & RT.
STA. 102+52 - 106+92, CL.
STA. 106+92 - 107+00, LT. & RT.

DURABLE LETTER OR SYMBOL
STA. 102+36, LT. (RT. ARROW)
STA. 102+47, LT. (THRU/LT. ARROW)
STA. 102+49, LT. ("ONLY")

STRIPING LEGEND
SWL = SINGLE WHITE LINE
SYL = SINGLE YELLOW LINE
DYL = DOUBLE YELLOW LINE
SDL = SINGLE DASHED LINE
SBL = SINGLE BROKEN LINE

SIGNING LEGEND
N = NEW
R = REMOVE
R&S = REMOVE AND SALVAGE
R&R = REMOVE AND RESET
RET = RETAIN
S = SALVAGE
B-B = BACK TO BACK

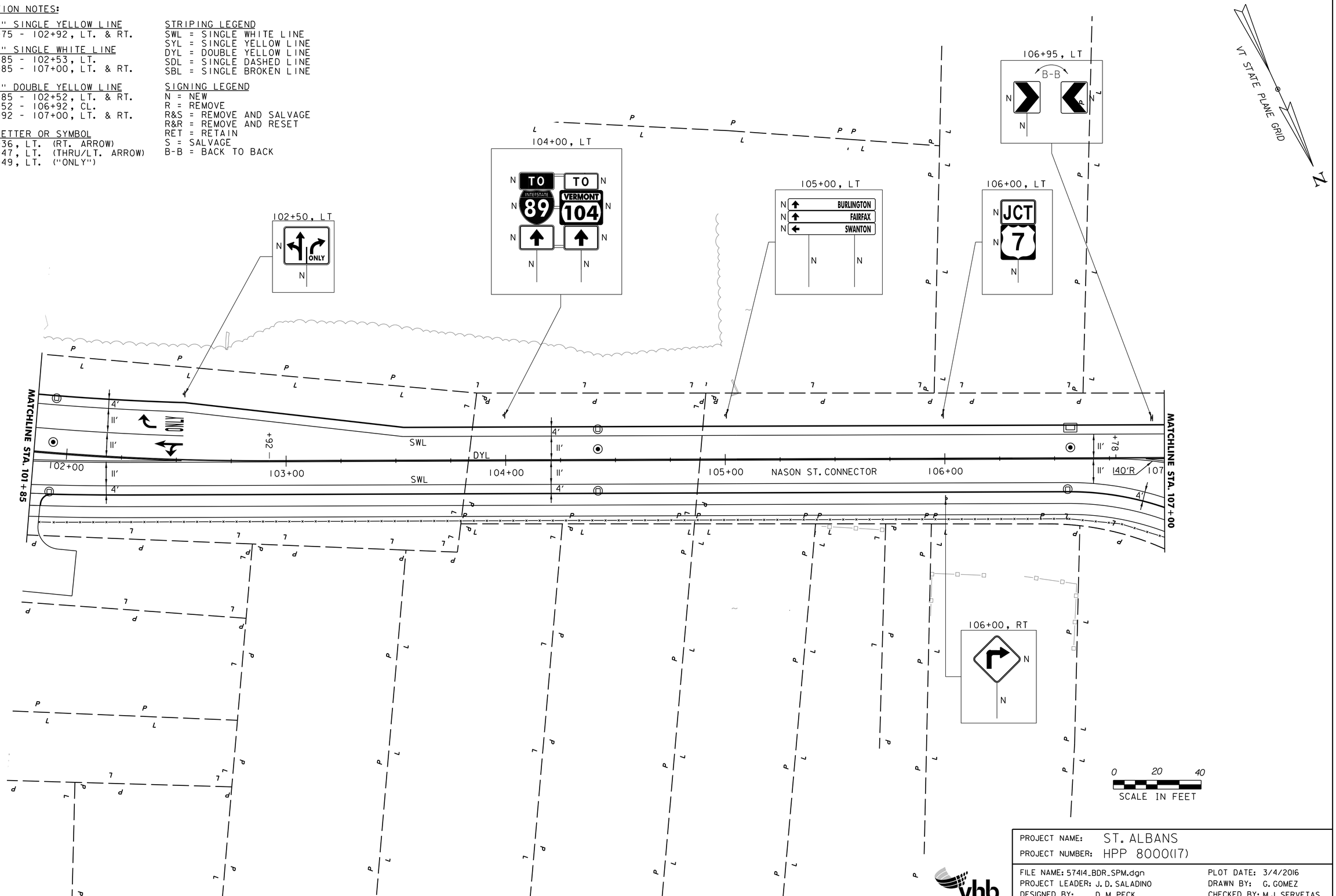

PROJECT NAME: ST. ALBANS	
PROJECT NUMBER: HPP 8000(17)	
FILE NAME: 57414_BDR_SPM.dgn	PLOT DATE: 3/4/2016
PROJECT LEADER: J. D. SALADINO	DRAWN BY: G. GOMEZ
DESIGNED BY: D. M. PECK	CHECKED BY: M.J. SERVETAS
SIGN & PAVEMENT MARKING PLANS (2 OF 16)	SHEET 95 OF 230

vhb

CONSTRUCTION NOTES:

DURABLE 4" SINGLE WHITE LINE
STA. 107+00 - 109+97, LT.
STA. 106+75 - 110+26, RT.
STA. 109+30 - 110+26, RT.
STA. 201+50 - 202+56, RT.
STA. 201+50 - 202+57, LT.
STA. 202+66 - 203+48, LT.
STA. 202+67 - 203+48, RT.
STA. 300+42 - 302+50, LT. & RT.
STA. 300+42 - 302+50, LT.

DURABLE 4" DOUBLE YELLOW LINE
STA. 107+00 - 110+26, CL.
STA. 201+50 - 202+56, CL.
STA. 202+66 - 203+51, CL.
STA. 204+37 - 204+85, CL.
STA. 300+42 - 301+72, CL.
STA. 301+72 - 302+50. LT. & RT.

DURABLE LETTER OR SYMBOL
STA. 109+34, RT. ("ONLY")
STA. 109+46, RT. (LT. ARROW)
STA. 110+10, RT. ("ONLY")
STA. 110+22, RT. (LT. ARROW)
STA. 300+51, LT. "LT. ARROW"
STA. 300+63, LT. "ONLY"
STA. 301+52, LT. "LT. ARROW"
STA. 301+64, LT. "ONLY"

DURABLE 24" STOP BAR
STA. 203+50, RT.
STA. 204+38, LT.

DURABLE CROSSWALK MARKING
STA. 202+47 - 202+46, LT. - RT.
STA. 204+25 - 204+33, LT. - RT.
STA. 300+34 - 300+42, LT. - RT.

REMOVING SIGNS
STA. 300+30, LT (3)

STRIPING LEGEND
SWL = SINGLE WHITE LINE
SYL = SINGLE YELLOW LINE
DYL = DOUBLE YELLOW LINE
SDL = SINGLE DASHED LINE
SBL = SINGLE BROKEN LINE

SIGNING LEGEND
N = NEW
R = REMOVE
R&S = REMOVE AND SALVAGE
R&R = REMOVE AND RESET
RET = RETAIN
S = SALVAGE
B-B = BACK TO BACK

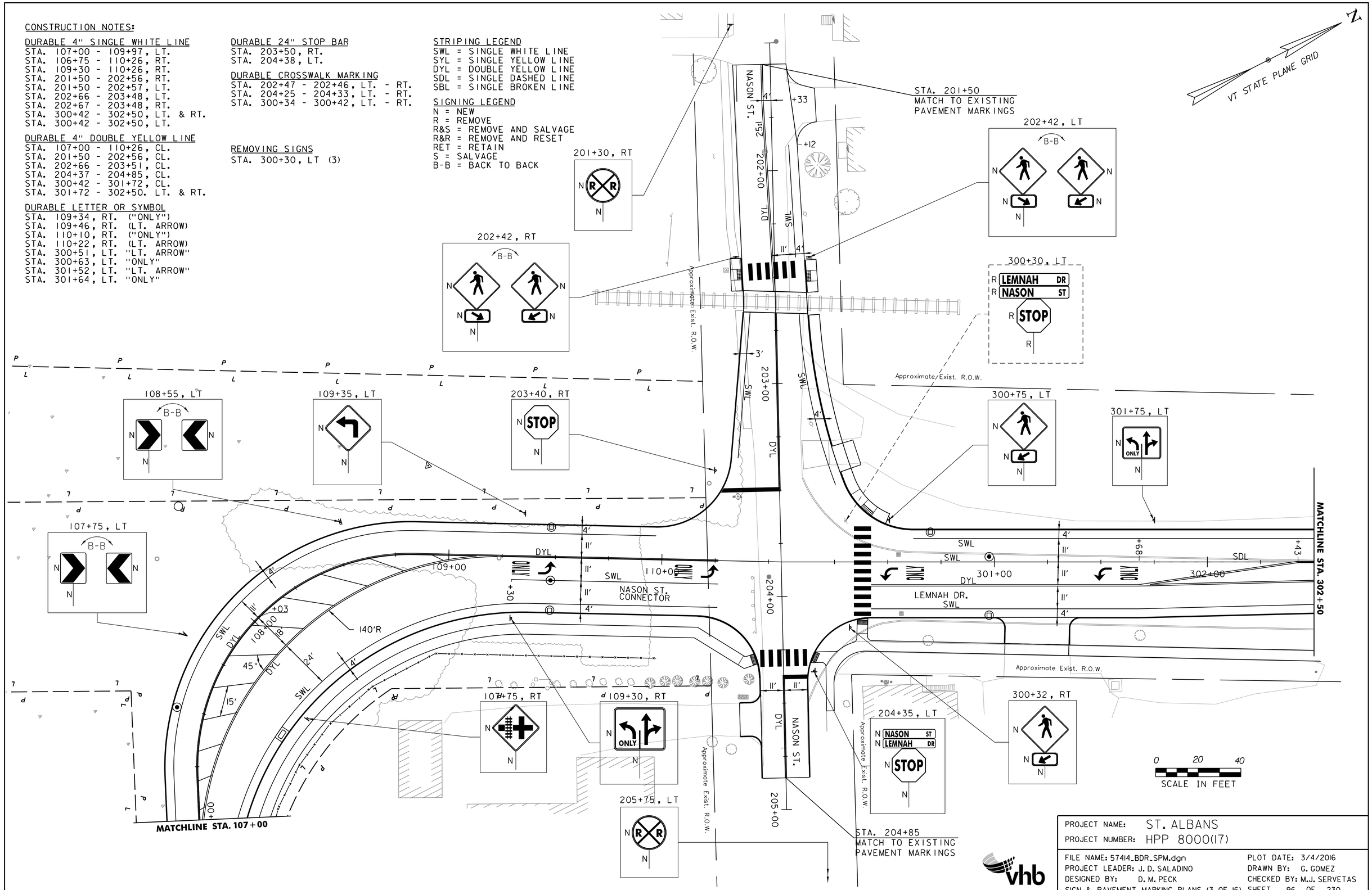

PROJECT NAME: ST. ALBANS	
PROJECT NUMBER: HPP 8000(17)	
FILE NAME: 57414_BDR_SPM.dgn	PLOT DATE: 3/4/2016
PROJECT LEADER: J. D. SALADINO	DRAWN BY: G. GOMEZ
DESIGNED BY: D. M. PECK	CHECKED BY: M.J. SERVETAS
SIGN & PAVEMENT MARKING PLANS (3 OF 16)	SHEET 96 OF 230

CONSTRUCTION NOTES:

DURABLE 4" DOUBLE YELLOW LINE
STA. 302+50 - 305+81, LT. & RT.
STA. 305+81 - 308+25, CL.

DURABLE 4" SINGLE WHITE LINE
STA. 302+50 - 308+25, LT. & RT.
STA. 306+11 - 306+91, RT. (PARKING LOT)

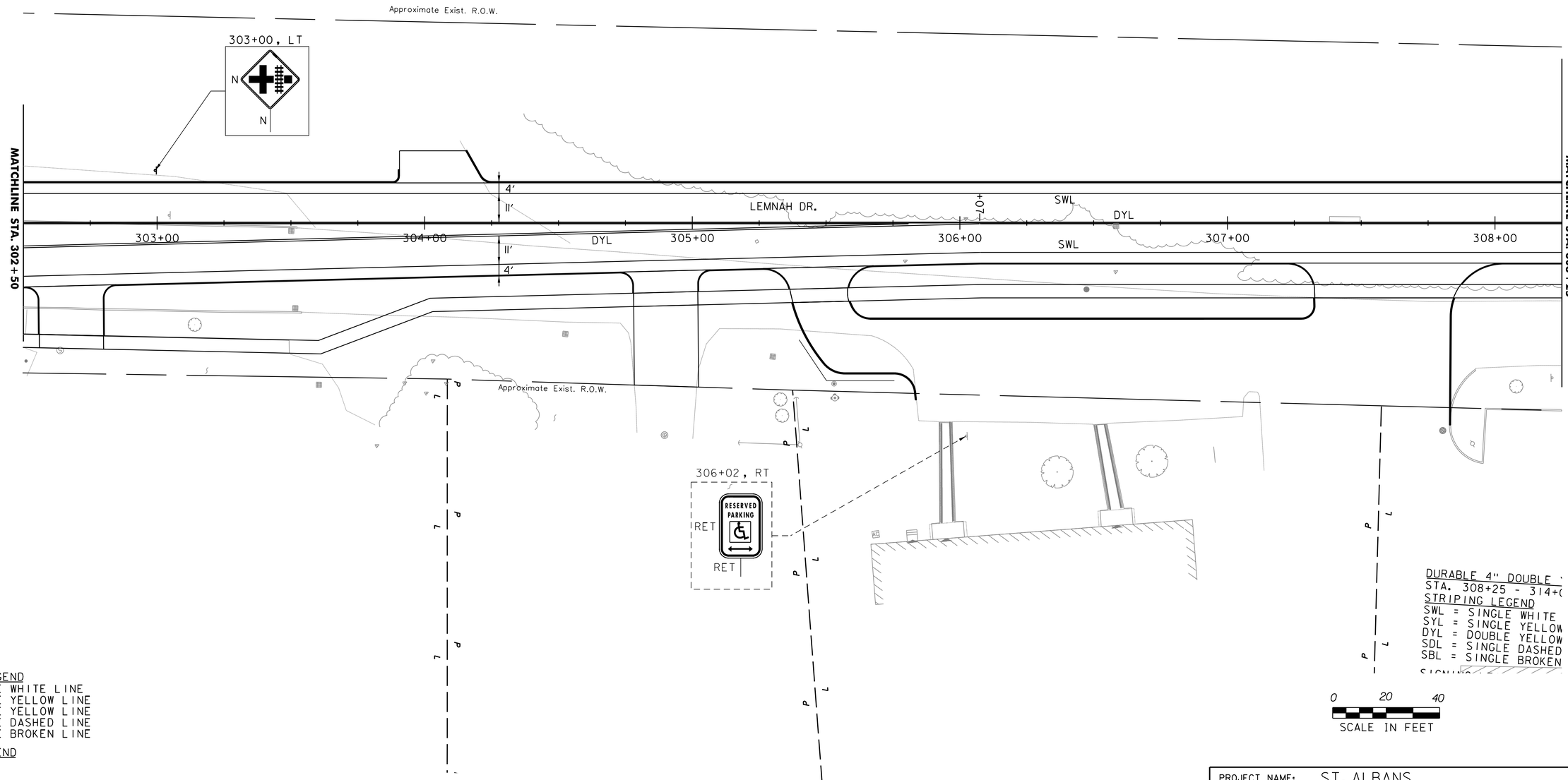

STRIPING LEGEND
SWL = SINGLE WHITE LINE
SYL = SINGLE YELLOW LINE
DYL = DOUBLE YELLOW LINE
SDL = SINGLE DASHED LINE
SBL = SINGLE BROKEN LINE

SIGNING LEGEND
N = NEW
R = REMOVE
R&S = REMOVE AND SALVAGE
R&R = REMOVE AND RESET
RET = RETAIN
S = SALVAGE
B-B = BACK TO BACK

PROJECT NAME: ST. ALBANS	
PROJECT NUMBER: HPP 8000(17)	
FILE NAME: 57414_BDR_SPM.dgn	PLOT DATE: 3/4/2016
PROJECT LEADER: J. D. SALADINO	DRAWN BY: G. GOMEZ
DESIGNED BY: D. M. PECK	CHECKED BY: M.J. SERVETAS
SIGN & PAVEMENT MARKING PLANS (4 OF 16)	SHEET 97 OF 230

VHB 57414.00

CONSTRUCTION NOTES:

DURABLE 4" SINGLE WHITE LINE
STA. 308+25 - 314+00, LT. & RT.
STA. 308+25 - 308+60, RT. (PARKING LOT)
STA. 308+86 - 308+94, RT. (PARKING SPOT)
STA. 310+25 - 311+03, RT. (PARKING LOT)

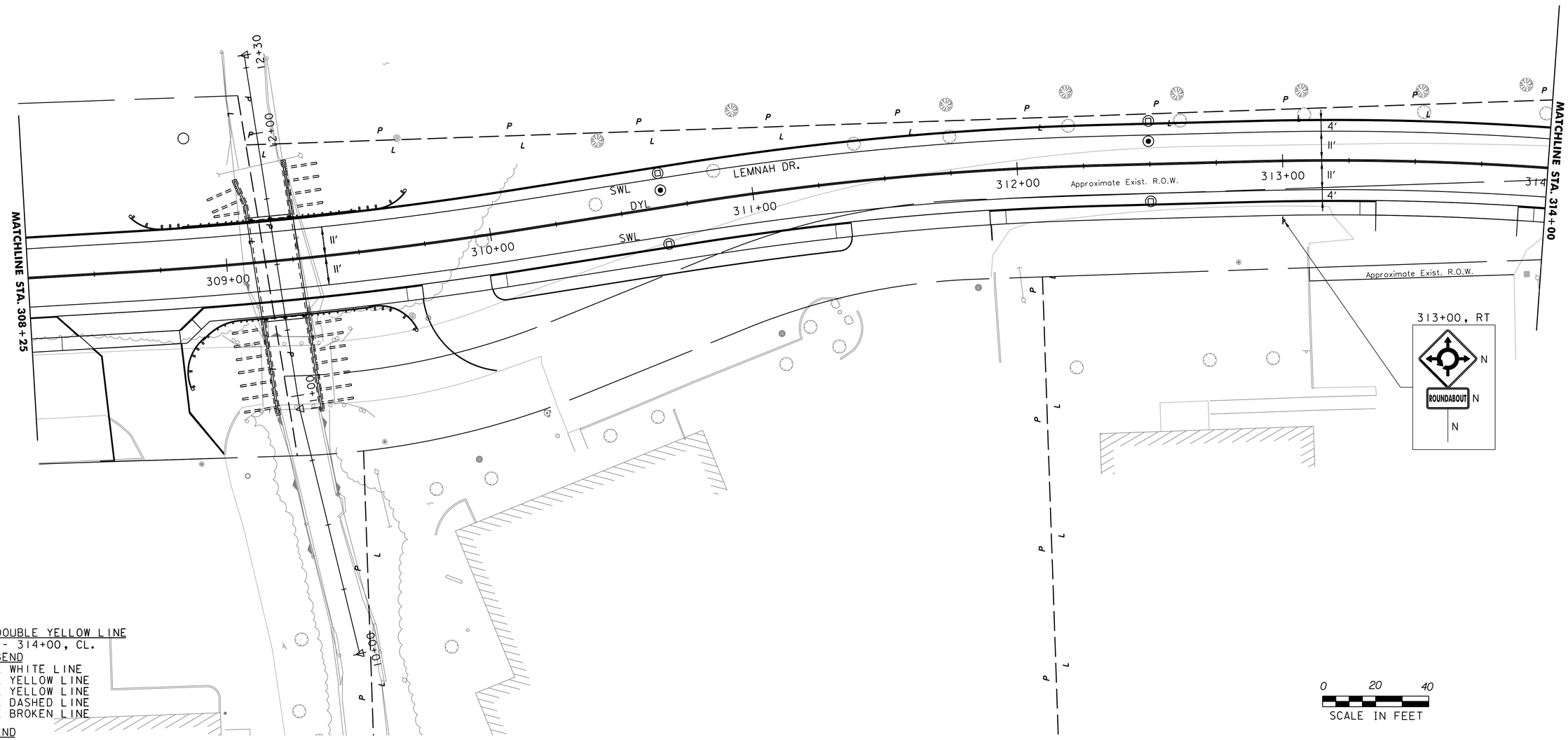

DURABLE 4" DOUBLE YELLOW LINE
STA. 308+25 - 314+00, CL.

STRIPING LEGEND
SWL = SINGLE WHITE LINE
SYL = SINGLE YELLOW LINE
DYL = DOUBLE YELLOW LINE
SDL = SINGLE DASHED LINE
SBL = SINGLE BROKEN LINE

SIGNING LEGEND
N = NEW
R = REMOVE
R&S = REMOVE AND SALVAGE
R&R = REMOVE AND RESET
RET = RETAIN
S = SALVAGE
B-B = BACK TO BACK

PROJECT NAME: ST. ALBANS	
PROJECT NUMBER: HPP 8000(17)	
FILE NAME: 57414_BDR_SPM.dgn	PLOT DATE: 3/4/2016
PROJECT LEADER: J. D. SALADINO	DRAWN BY: G. GOMEZ
DESIGNED BY: D. M. PECK	CHECKED BY: M.J. SERVETAS
SIGN & PAVEMENT MARKING PLANS (5 OF 16)	SHEET 98 OF 230

CONSTRUCTION NOTES:

DURABLE 4" SINGLE WHITE LINE
STA. 314+00 - 316+10, LT.
STA. 314+00 - 317+02, RT.
STA. 316+56 - 316+82, LT.
STA. 2002+67 - 2003+35, LT.
STA. 2002+93 - 2003+20, RT.
STA. 2004+05 - 2005+44, LT.
STA. 400+46 - 402+75, RT.
STA. 400+37 - 402+75, LT.

DURABLE 4" SINGLE YELLOW LINE
STA. 315+66 - 316+91, LT.
STA. 315+66 - 316+90, RT.
STA. 316+56 - 316+73, LT.
STA. 2002+60 - 2003+25, LT.
STA. 2002+60 - 2003+28, RT.
STA. 2003+45 - 2003+86 (ROUNDABOUT)
STA. 2004+05 - 2005+12, LT.
STA. 2004+17 - 2005+12, RT.
STA. 400+47 - 401+83, LT. & RT.

DURABLE 4" DOUBLE YELLOW LINE
STA. 314+00 - 315+66, CL.
STA. 2005+12 - 2005+44, CL.
STA. 401+83 - 402+75, CL.

DURABLE CROSSWALK MARKING
STA. 316+55 - 316+63, RT.
STA. 316+55 - 316+63, LT.
STA. 2003+92 - 2004+17, RT.
STA. 2004+26 - 2004+42, LT.

REMOVING SIGNS
STA. 317+05, RT (3)
STA. 401+98, RT (2)
STA. 402+72, RT
STA. 403+95, LT (2)

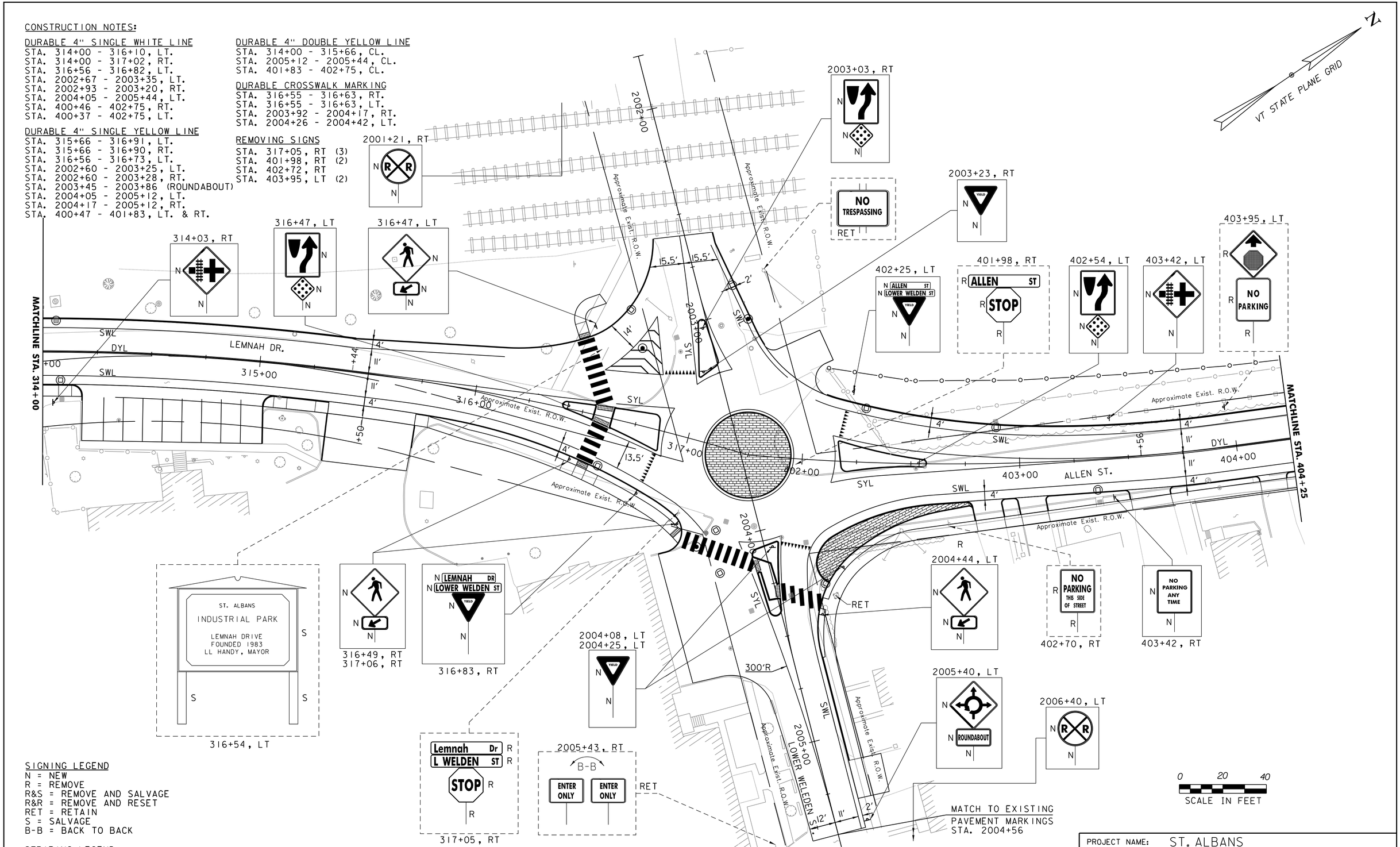

SIGNING LEGEND
N = NEW
R = REMOVE
R&S = REMOVE AND SALVAGE
R&R = REMOVE AND RESET
RET = RETAIN
S = SALVAGE
B-B = BACK TO BACK

STRIPING LEGEND
SWL = SINGLE WHITE LINE
SYL = SINGLE YELLOW LINE
DYL = DOUBLE YELLOW LINE
SDL = SINGLE DASHED LINE
SBL = SINGLE BROKEN LINE

PROJECT NAME: ST. ALBANS	
PROJECT NUMBER: HPP 8000(17)	
FILE NAME: 57414_BDR_SPM.dgn	PLOT DATE: 3/4/2016
PROJECT LEADER: J. D. SALADINO	DRAWN BY: G. GOMEZ
DESIGNED BY: D. M. PECK	CHECKED BY: M.J. SERVETAS
SIGN & PAVEMENT MARKING PLANS (6 OF 16)	SHEET 99 OF 230

VHB 57414.00

CONSTRUCTION NOTES:

DURABLE 4" DOUBLE YELLOW LINE
STA. 402+75 - 404+28, CL.
STA. 404+64 - 406+75, CL.

DURABLE 4" SINGLE WHITE LINE
STA. 402+75 - 404+28, RT.
STA. 404+64 - 406+75, RT.
STA. 402+75 - 406+75, LT.

DURABLE CROSSWALK MARKING
STA. 404+33 - 404+59, RT.

REMOVING SIGNS
STA. 404+66, RT (2)
STA. 406+16, RT
STA. 406+70, RT
STA. 406+74, RT

ERECTING SALVAGED SIGNS
STA. 406+74, RT

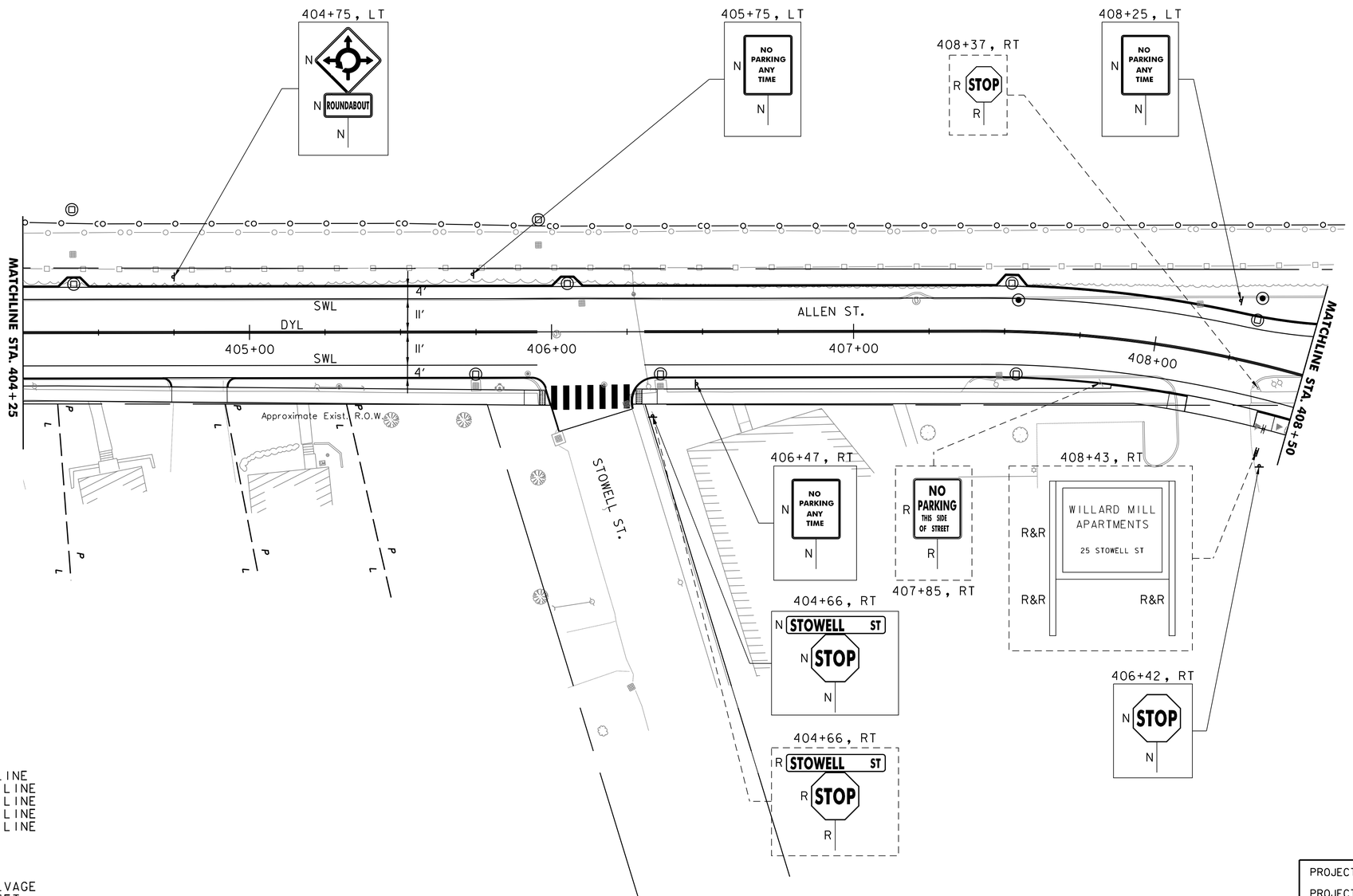

STRIPING LEGEND
SWL = SINGLE WHITE LINE
SYL = SINGLE YELLOW LINE
DYL = DOUBLE YELLOW LINE
SDL = SINGLE DASHED LINE
SBL = SINGLE BROKEN LINE

SIGNING LEGEND
N = NEW
R = REMOVE
R&S = REMOVE AND SALVAGE
R&R = REMOVE AND RESET
RET = RETAIN
S = SALVAGE
B-B = BACK TO BACK

0 20 40
SCALE IN FEET

PROJECT NAME: ST. ALBANS	
PROJECT NUMBER: HPP 8000(17)	
FILE NAME: 57414_BDR_SPM.dgn	PLOT DATE: 3/4/2016
PROJECT LEADER: J. D. SALADINO	DRAWN BY: G. GOMEZ
DESIGNED BY: D. M. PECK	CHECKED BY: M.J. SERVETAS
SIGN & PAVEMENT MARKING PLANS (7 OF 16)	SHEET 100 OF 230

CONSTRUCTION NOTES:

DURABLE 4" DOUBLE YELLOW LINE
STA. 406+75 - 407+91, CL.
STA. 408+79 - 412+25, CL.
STA. 501+47 - 505+75, CL.

DURABLE 4" SINGLE YELLOW LINE
STA. 407+12 - 408+10, LT.

DURABLE 4" SINGLE WHITE LINE
STA. 406+75 - 408+11, LT.
STA. 407+11 - 408+02, LT.
STA .406+75 - 407+91, RT.
STA. 408+45 - 412+25, LT.
STA. 409+50 - 412+25, RT.
STA. 501+49 - 501+97, LT.
STA. 501+49 - 505+75, RT.
STA. 502+11 - 505+75, LT.
STA. 502+79 - 503+93, LT. (PARKING LOT)

DURABLE CROSSWALK MARKING
STA. 500+87 - 500+96 LT. - RT.

DURABLE 24" STOP BAR
STA. 500+79, RT.
STA. 501+48, LT.

REMOVING SIGNS
STA. 409+05, LT
STA. 409+40, RT (3)
STA. 409+50, LT
STA. 411+17, RT
STA. 411+70, RT
STA. 411+91, LT
STA. 501+35, RT

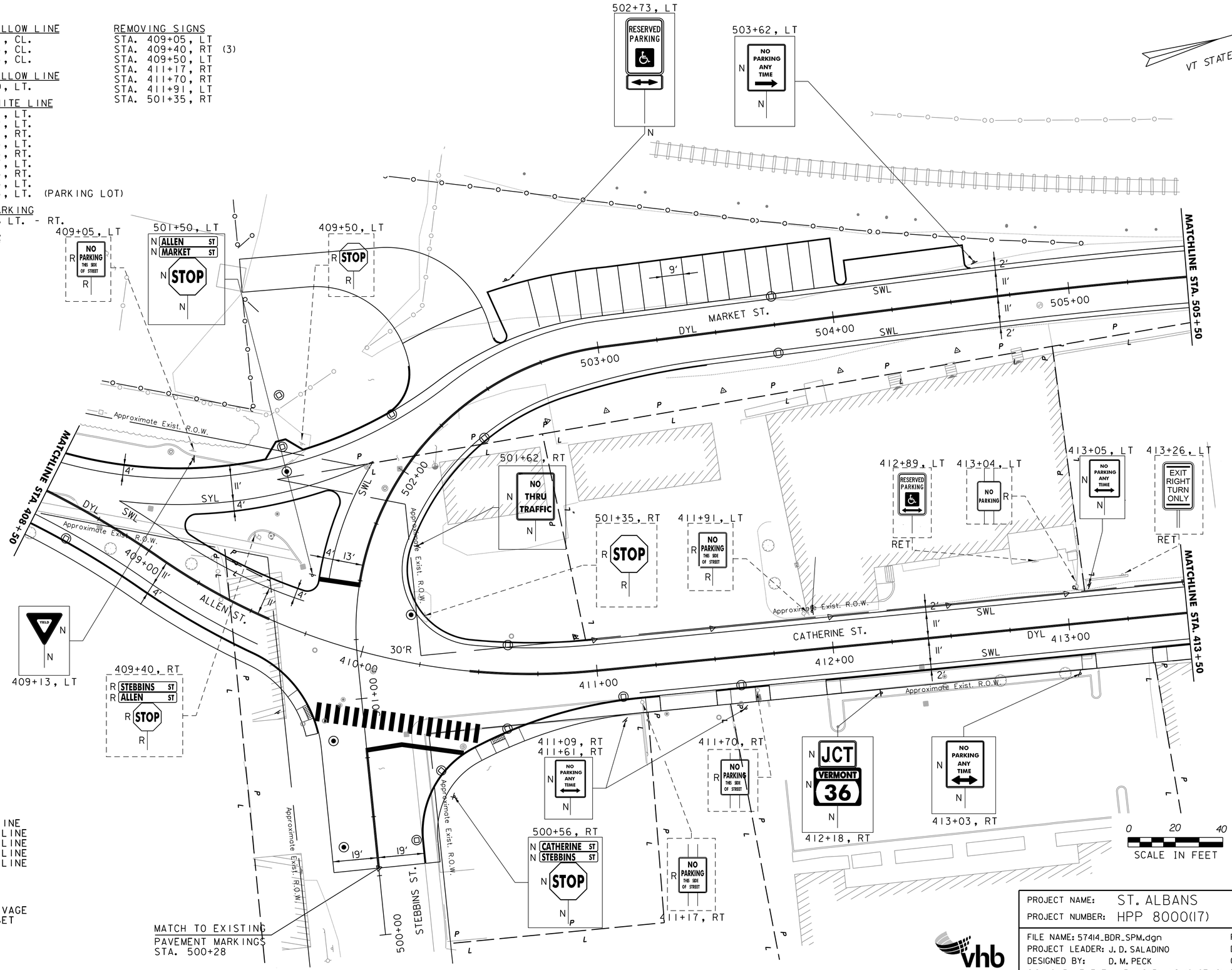

STRIPING LEGEND
SWL = SINGLE WHITE LINE
SYL = SINGLE YELLOW LINE
DYL = DOUBLE YELLOW LINE
SDL = SINGLE DASHED LINE
SBL = SINGLE BROKEN LINE

SIGNING LEGEND
N = NEW
R = REMOVE
R&S = REMOVE AND SALVAGE
R&R = REMOVE AND RESET
RET = RETAIN
S = SALVAGE
B-B = BACK TO BACK

PROJECT NAME: ST. ALBANS	
PROJECT NUMBER: HPP 8000(17)	
FILE NAME: 57414_BDR_SPM.dgn	PLOT DATE: 3/4/2016
PROJECT LEADER: J. D. SALADINO	DRAWN BY: G. GOMEZ
DESIGNED BY: D. M. PECK	CHECKED BY: M.J. SERVETAS
SIGN & PAVEMENT MARKING PLANS (8 OF 16)	SHEET 101 OF 230

CONSTRUCTION NOTES:

DURABLE 4" DOUBLE YELLOW LINE
STA. 38+25 - 39+49, CL. & LT.
STA. 412+25 - 413+57, CL.
STA. 505+75 - 506+98, CL.
STA. 600+46 - 603+25, CL.

DURABLE LETTER OR SYMBOL
STA. 38+29, RT. "LT. ARROW"
STA. 38+86, RT. "ONLY"
STA. 39+33, RT. "LT. ARROW"
STA. 600+57, LT. "RT. ARROW"
STA. 600+57, LT. 'THRU/LT. ARROW"
STA. 601+29, LT. "THRU/LT. ARROW"
STA. 601+29, LT. "ONLY'
STA. 602+13, LT. "THRU/LT. ARROW"
STA. 602+13, LT. "RT. ARROW"
STA. 602+95, LT. "THRU/LT. ARROW"
STA. 602+95, LT. "ONLY"

DURABLE CROSSWALK MARKING
STA. 39+48 - 39+68, RT. - LT.
STA. 413+61 - 413+67, RT. - LT.
STA. 507+01 - 507+13, LT. - RT.
STA. 600+24 - 600+51, LT. - RT.
STA. 602+03 - 602+25, LT.

DURABLE 4" SINGLE WHITE LINE
STA. 38+24 - 39+42, RT.
STA. 412+25 - 413+57, LT. & RT.
STA. 505+75 - 506+75, LT.
STA. 505+75 - 506+98, RT.
STA. 600+48 - 603+25, LT.
STA. 600+70 - 601+98, LT. (PARKING)
STA. 602+65 - 603+10, LT. (PARKING)
STA. 600+81 - 603+12, RT. (PARKING)

DURABLE 24" STOP BAR
STA. 39+43, RT.
STA. 413+56, RT.
STA. 506+99, RT.
STA. 600+47, LT.

REMOVING SIGNS
STA. 39+58, LT.
STA. 40+08, RT
STA. 40+70, LT
STA. 411+92, RT
STA. 413+55, RT (3)
STA. 600+40, LT
STA. 601+15, RT
STA. 601+93, RT
STA. 602+75, RT
STA. 603+15, LT

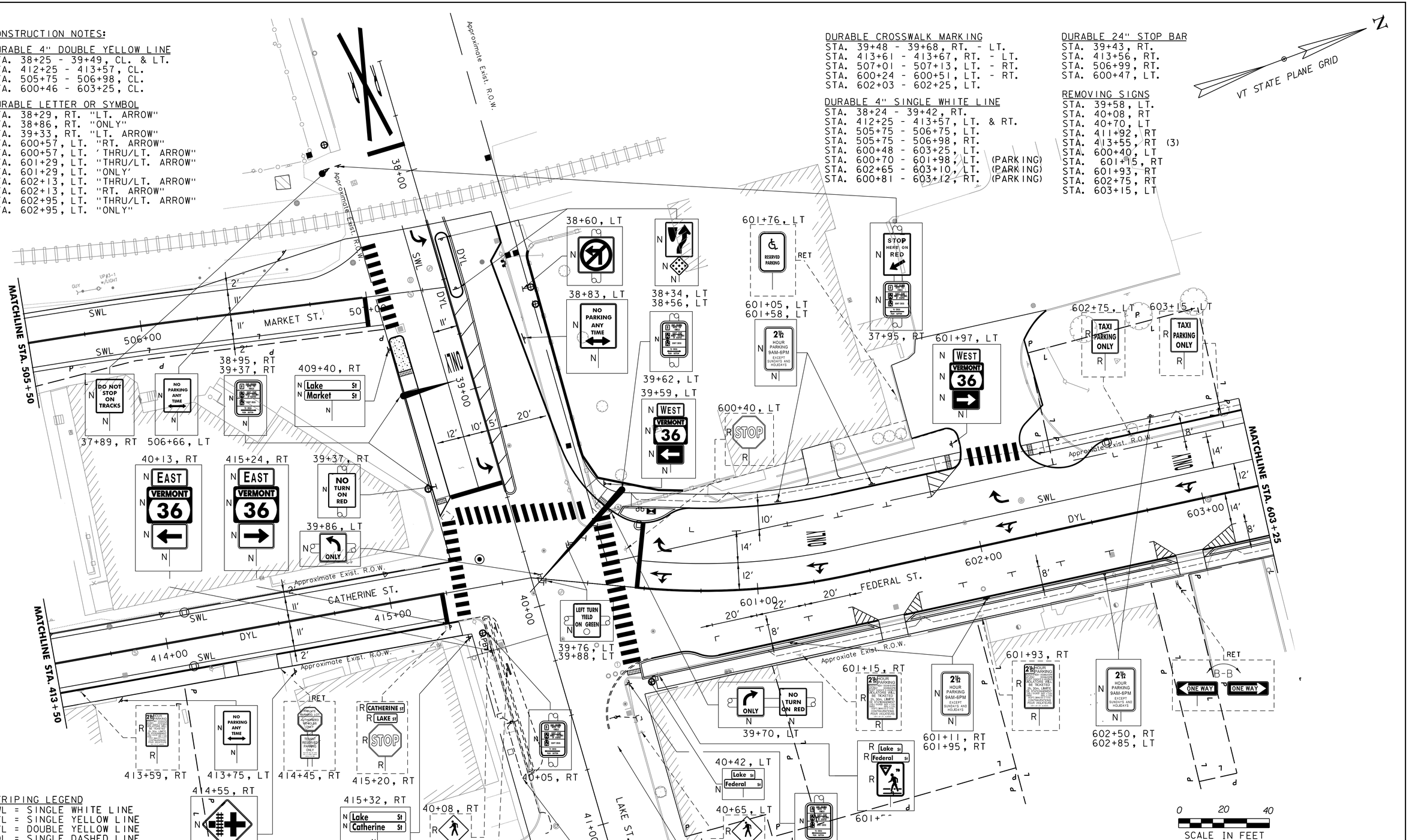

STRIPING LEGEND
SWL = SINGLE WHITE LINE
SYL = SINGLE YELLOW LINE
DYL = DOUBLE YELLOW LINE
SDL = SINGLE DASHED LINE
SBL = SINGLE BROKEN LINE

SIGNING LEGEND
N = NEW
R = REMOVE
R&S = REMOVE AND SALVAGE
R&R = REMOVE AND RESET
RET = RETAIN
S = SALVAGE
B-B = BACK TO BACK

PROJECT NAME: ST. ALBANS	
PROJECT NUMBER: HPP 8000(17)	
FILE NAME: 57414_BDR_SPM.dgn	PLOT DATE: 3/4/2016
PROJECT LEADER: J. D. SALADINO	DRAWN BY: G. GOMEZ
DESIGNED BY: D. M. PECK	CHECKED BY: M.J. SERVETAS
SIGN & PAVEMENT MARKING PLANS (9 OF 16)	SHEET 102 OF 230

CONSTRUCTION NOTES:

DURABLE 4" SINGLE WHITE LINE
STA. 603+28 - 603+50, LT. & RT. (PARKING)
STA. 604+52 - 604+92, RT. (PARKING)
STA. 606+14 - 606+64, RT. (PARKING)
STA. 607+46 - 609+25, RT.
STA. 603+25 - 603+50, LT. (PARKING)
STA. 604+33 - 605+66, LT. (PARKING)
STA. 606+76 - 608+04, LT. (PARKING)
STA. 608+04 - 609+25, LT.

DURABLE 4" DOUBLE YELLOW LINE
STA. 603+25 - 605+11, CL.
STA. 605+55 - 609+25, CL.
STA. 605+41, RT. (KINGMAN ST.)

DURABLE CROSSWALK MARKING
STA. 603+98 - 604+21, RT.
STA. 603+99 - 604+25, LT.
STA. 605+26 - 605+68, RT.
STA. 607+18 - 607+39, RT.

REMOVING SIGNS
STA. 603+62, RT (3)
STA. 604+29, RT
STA. 604+56, LT (2)
STA. 604+92, LT
STA. 605+02, RT (2)
STA. 605+13, RT
STA. 605+26, LT (2)
STA. 605+72, RT (4)
STA. 606+03, RT
STA. 606+96, LT
STA. 607+36, LT
STA. 607+44, RT (2)

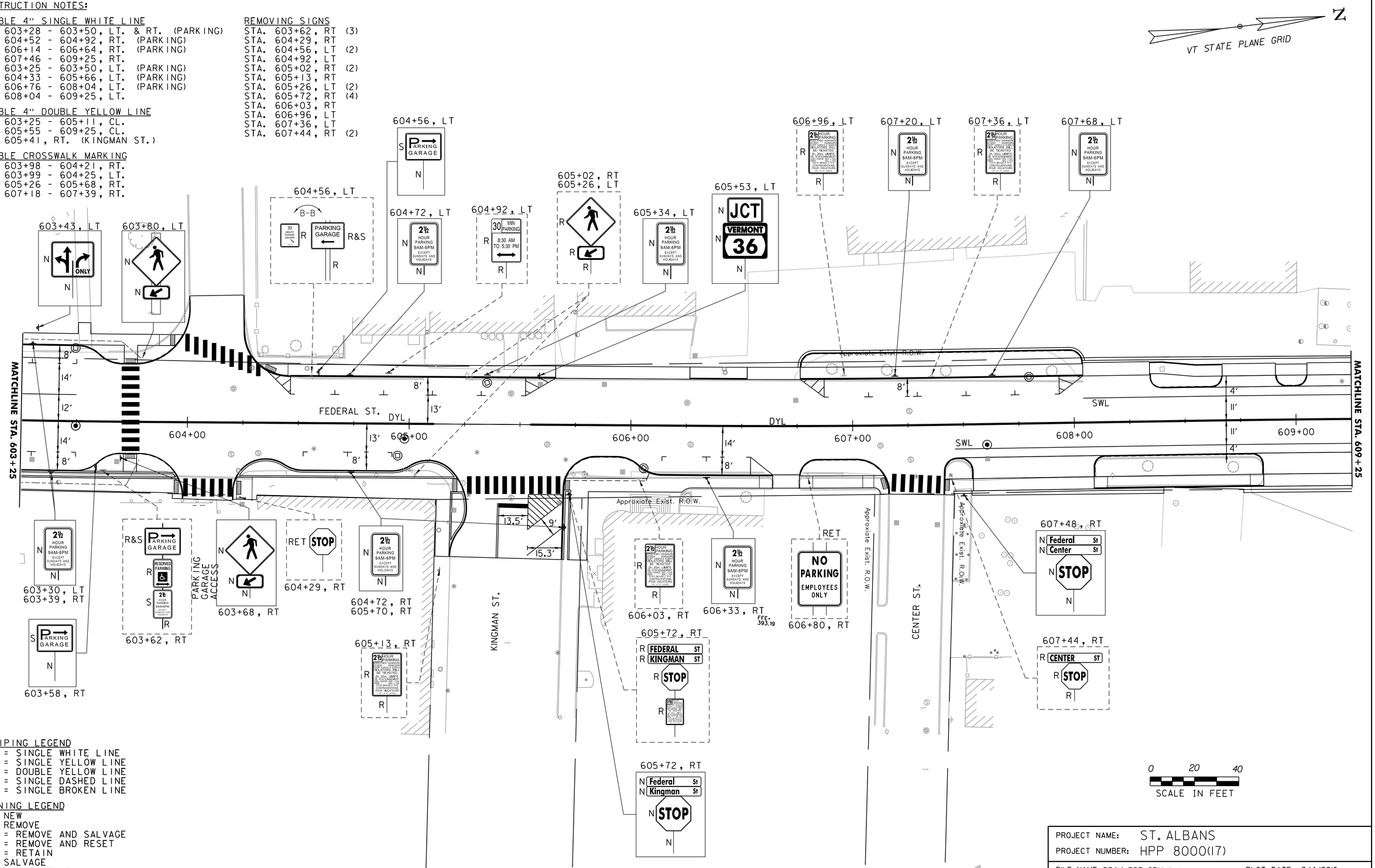

STRIPING LEGEND
SWL = SINGLE WHITE LINE
SYL = SINGLE YELLOW LINE
DYL = DOUBLE YELLOW LINE
SDL = SINGLE DASHED LINE
SBL = SINGLE BROKEN LINE

SIGNING LEGEND
N = NEW
R = REMOVE
R&S = REMOVE AND SALVAGE
R&R = REMOVE AND RESET
RET = RETAIN
S = SALVAGE
B-B = BACK TO BACK

PROJECT NAME: ST. ALBANS	
PROJECT NUMBER: HPP 8000(17)	
FILE NAME: 57414_BDR_SPM.dgn	PLOT DATE: 3/4/2016
PROJECT LEADER: J. D. SALADINO	DRAWN BY: G. GOMEZ
DESIGNED BY: D. M. PECK	CHECKED BY: M.J. SERVETAS
SIGN & PAVEMENT MARKING PLANS (10 OF 16)	SHEET 103 OF 230

VHB 57414.00

CONSTRUCTION NOTES:

DURABLE 4" SINGLE WHITE LINE
STA. 609+25 - 614+50, LT.
STA. 609+25 - 610+44, RT.
STA. 610+87 - 612+89, RT.
STA. 613+43 - 614+50, RT.

DURABLE 4" DOUBLE YELLOW LINE
STA. 609+25 - 610+44, CL.
STA. 610+87 - 612+89, CL.
STA. 613+43 - 614+50, CL.

DURABLE CROSSWALK MARKING
STA. 610+53 - 610+76, RT.
STA. 613+05 - 613+27, RT.
STA. 613+08 - 613+26, LT.

REMOVING SIGNS
STA. 610+80, RT (3)
STA. 612+76, LT
STA. 612+96, RT (2)
STA. 613+41, LT (3)

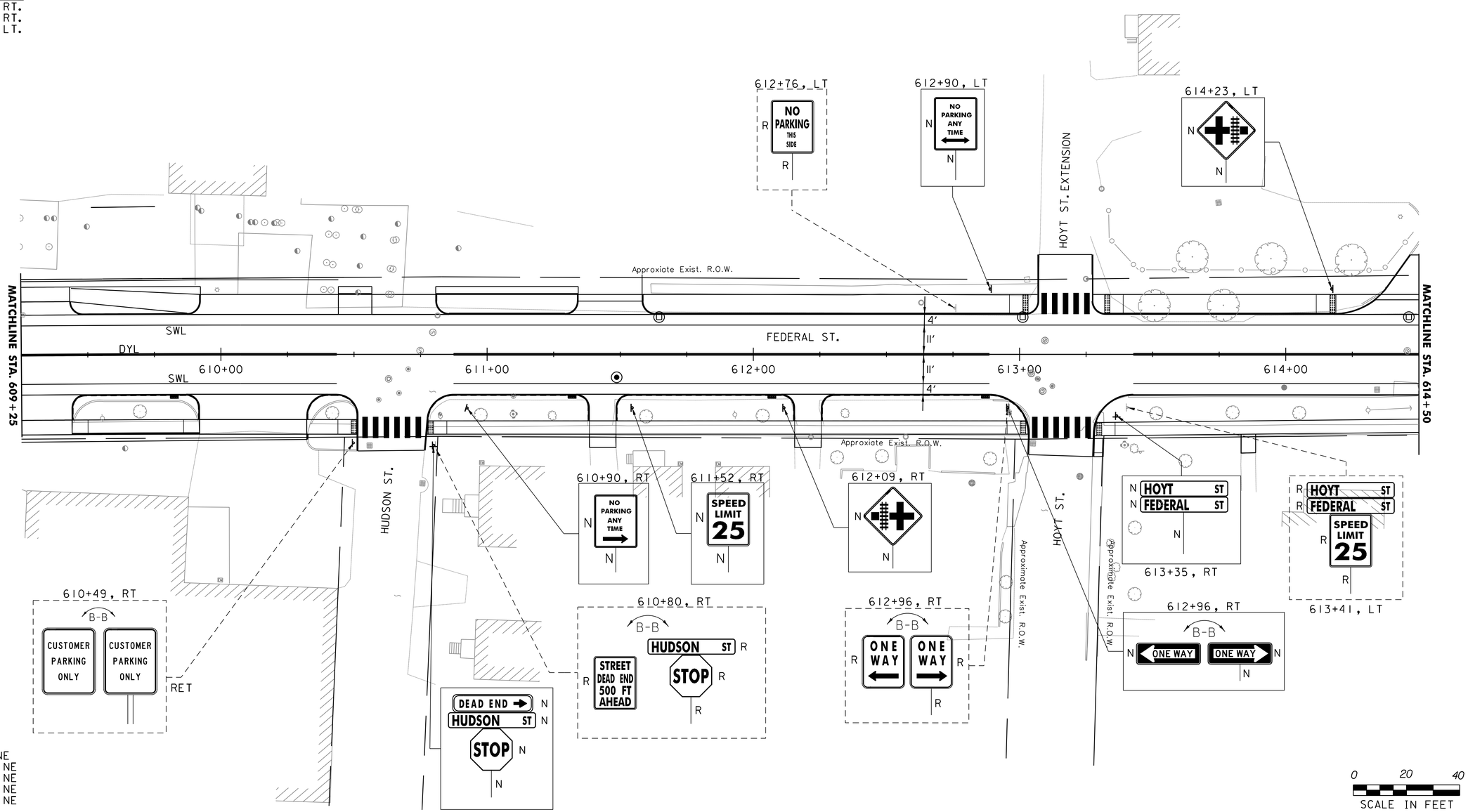

STRIPING LEGEND
SWL = SINGLE WHITE LINE
SYL = SINGLE YELLOW LINE
DYL = DOUBLE YELLOW LINE
SDL = SINGLE DASHED LINE
SBL = SINGLE BROKEN LINE

SIGNING LEGEND
N = NEW
R = REMOVE
R&S = REMOVE AND SALVAGE
R&R = REMOVE AND RESET
RET = RETAIN
S = SALVAGE
B-B = BACK TO BACK

PROJECT NAME: ST. ALBANS	
PROJECT NUMBER: HPP 8000(17)	
FILE NAME: 57414_BDR_SPM.dgn	PLOT DATE: 3/4/2016
PROJECT LEADER: J. D. SALADINO	DRAWN BY: G. GOMEZ
DESIGNED BY: D. M. PECK	CHECKED BY: M.J. SERVETAS
SIGN & PAVEMENT MARKING PLANS (11 OF 16)	SHEET 104 OF 230

CONSTRUCTION NOTES:

DURABLE 4" DOUBLE YELLOW LINE
STA. 614+50 - 616+61, CL.
STA. 617+55 - 620+15, CL.

DURABLE 4" SINGLE WHITE LINE
STA. 614+50 - 616+61, LT.
STA. 617+55 - 620+15, LT.
STA. 614+50 - 620+15, RT.

DURABLE CROSSWALK MARKING
STA. 616+80 - 617+34, LT.

REMOVING SIGNS
619+79, RT

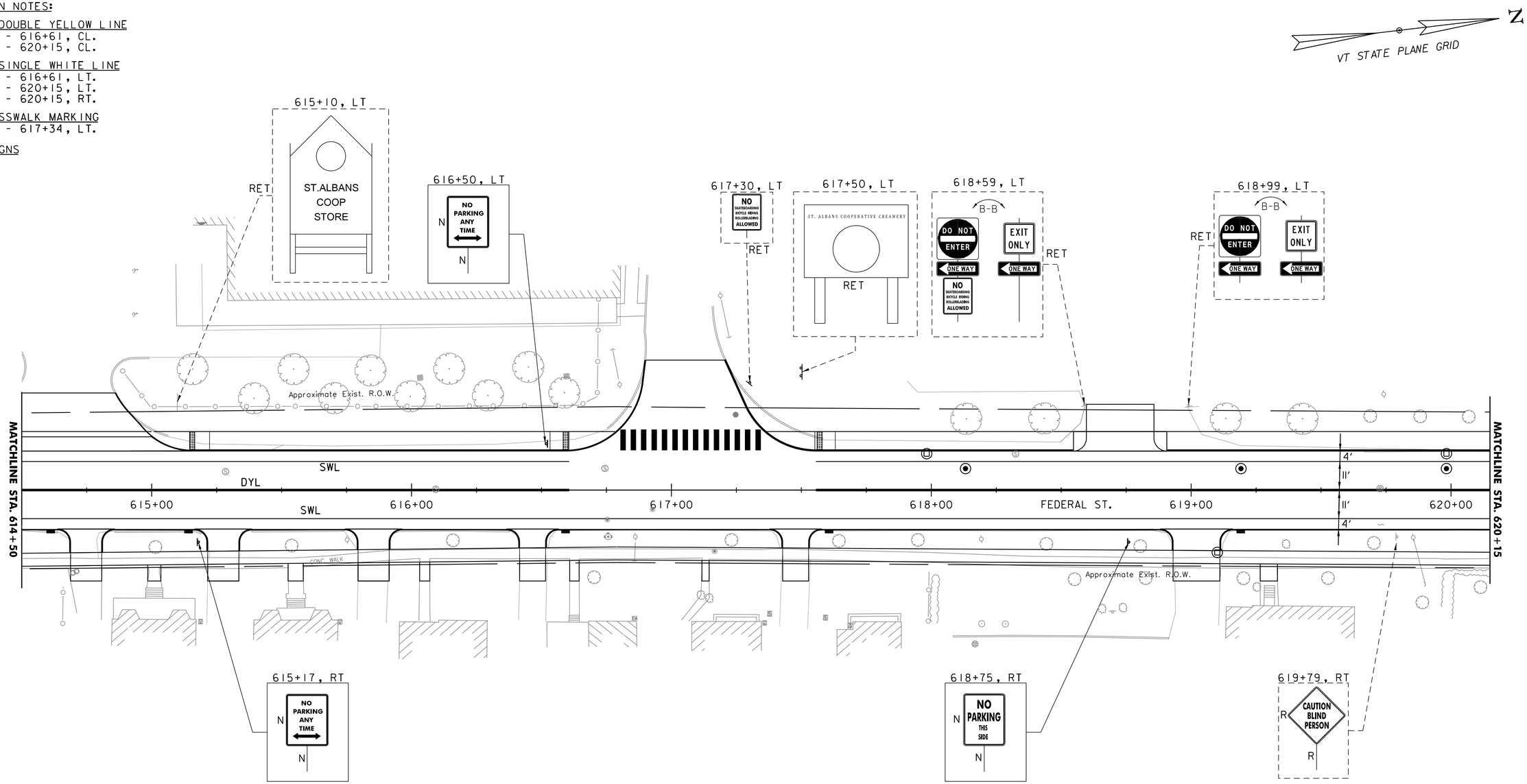

STRIPING LEGEND
SWL = SINGLE WHITE LINE
SYL = SINGLE YELLOW LINE
DYL = DOUBLE YELLOW LINE
SDL = SINGLE DASHED LINE
SBL = SINGLE BROKEN LINE

SIGNING LEGEND
N = NEW
R = REMOVE
R&S = REMOVE AND SALVAGE
R&R = REMOVE AND RESET
RET = RETAIN
S = SALVAGE
B-B = BACK TO BACK

0 20 40
SCALE IN FEET

PROJECT NAME: ST. ALBANS	
PROJECT NUMBER: HPP 8000(17)	
FILE NAME: 57414_BDR_SPM.dgn	PLOT DATE: 3/4/2016
PROJECT LEADER: J. D. SALADINO	DRAWN BY: G. GOMEZ
DESIGNED BY: D. M. PECK	CHECKED BY: M.J. SERVETAS
SIGN & PAVEMENT MARKING PLANS (12 OF 16)	SHEET 105 OF 230

VHB 57414.00

CONSTRUCTION NOTES:

DURABLE 4" DOUBLE YELLOW LINE
STA. 620+15 - 621+33, CL.
STA. 622+15 - 625+50, CL.

DURABLE 4" SINGLE WHITE LINE
STA. 620+15 - 621+22, LT.
STA. 622+15 - 625+50, LT.
STA. 620+15 - 625+50, RT.

DURABLE CROSSWALK MARKING
STA. 621+40 - 621+86, LT.
STA. 622+09 - 622+17, LT. - RT.

REMOVING SIGNS
STA. 621+42, LT (2)
STA. 622+60, LT

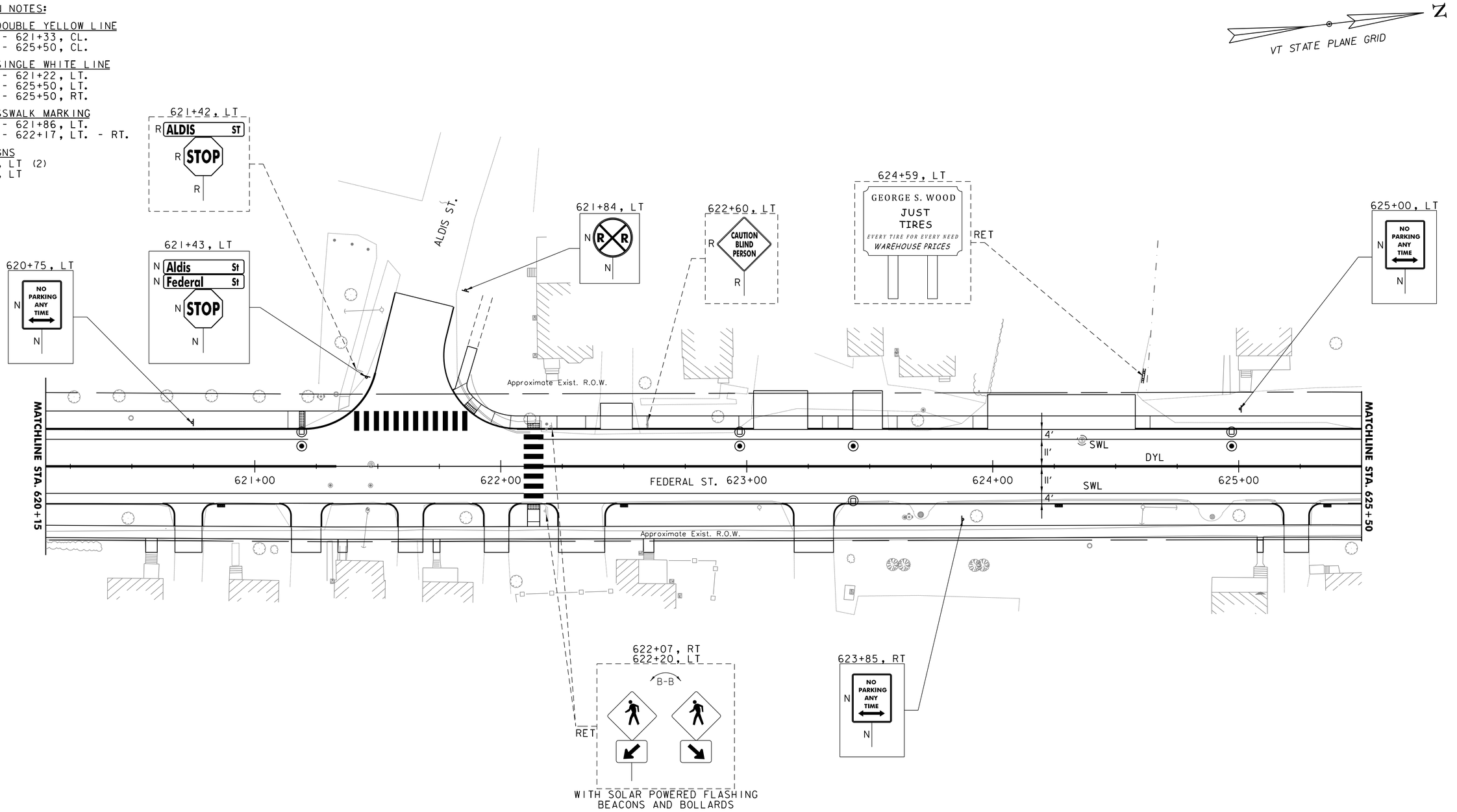

STRIPING LEGEND
SWL = SINGLE WHITE LINE
SYL = SINGLE YELLOW LINE
DYL = DOUBLE YELLOW LINE
SDL = SINGLE DASHED LINE
SBL = SINGLE BROKEN LINE

SIGNING LEGEND
N = NEW
R = REMOVE
R&S = REMOVE AND SALVAGE
R&R = REMOVE AND RESET
RET = RETAIN
S = SALVAGE
B-B = BACK TO BACK

0 20 40
SCALE IN FEET

PROJECT NAME: ST. ALBANS	
PROJECT NUMBER: HPP 8000(17)	
FILE NAME: 57414_BDR_SPM.dgn	PLOT DATE: 3/4/2016
PROJECT LEADER: J. D. SALADINO	DRAWN BY: G. GOMEZ
DESIGNED BY: D. M. PECK	CHECKED BY: M.J. SERVETAS
SIGN & PAVEMENT MARKING PLANS (13 OF 16)	SHEET 106 OF 230

CONSTRUCTION NOTES:

DURABLE 4" SINGLE WHITE LINE
STA. 625+50 - 630+25, LT.
STA. 625+50 - 630+25, RT.
STA. 629+63 - 630+25, RT.

DURABLE 4' DOUBLE YELLOW LINE
STA. 625+50 - 626+50, CL.
STA. 626+50 - 629+50, LT. & RT.
STA. 629+50 - 630+25, CL.

DURABLE LETTER OR SYMBOL
STA. 629+68, RT. "LT. ARROW"
STA. 629+68, RT. "RT. ARROW"

REMOVING SIGNS
STA. 629+14, LT

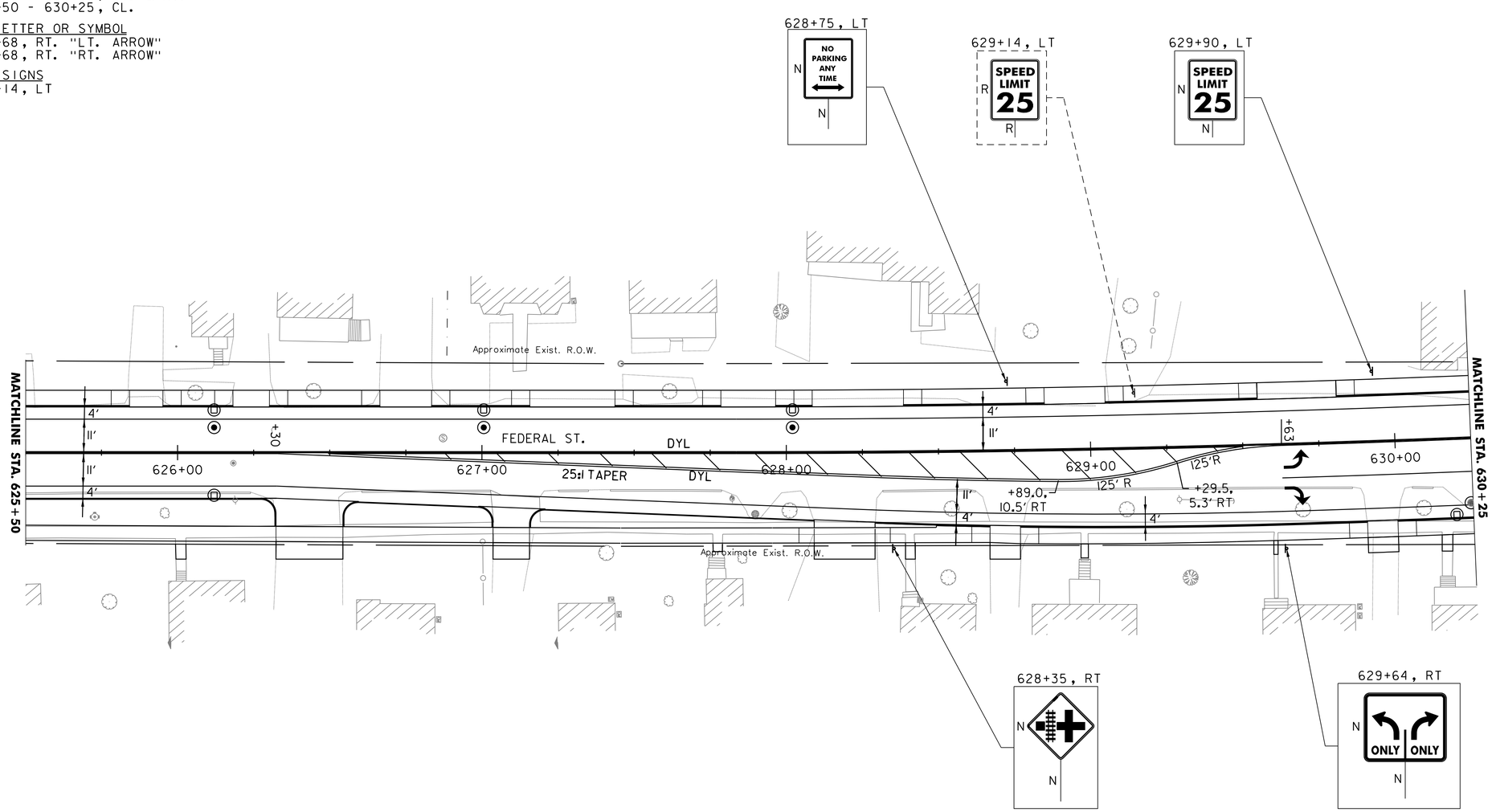

STRIPING LEGEND
SWL = SINGLE WHITE LINE
SYL = SINGLE YELLOW LINE
DYL = DOUBLE YELLOW LINE
SDL = SINGLE DASHED LINE
SBL = SINGLE BROKEN LINE

SIGNING LEGEND
N = NEW
R = REMOVE
R&S = REMOVE AND SALVAGE
R&R = REMOVE AND RESET
RET = RETAIN
S = SALVAGE
B-B = BACK TO BACK

0 20 40
SCALE IN FEET

PROJECT NAME: ST. ALBANS	
PROJECT NUMBER: HPP 8000(17)	
FILE NAME: 57414_BDR_SPM.dgn	PLOT DATE: 3/4/2016
PROJECT LEADER: J. D. SALADINO	DRAWN BY: G. GOMEZ
DESIGNED BY: D. M. PECK	CHECKED BY: M.J. SERVETAS
SIGN & PAVEMENT MARKING PLANS (14 OF 16)	SHEET 107 OF 230

CONSTRUCTION NOTES:

DURABLE 4" DOUBLE YELLOW LINE
STA. 630+25 - 631+13, CL.
STA. 800+40 - 802+25, CL.
STA. 801+31 - 802+25, RT.
STA. 803+40 - 805+25, CL.

DURABLE 4" SINGLE WHITE LINE
STA. 630+25 - 631+13, RT.
STA. 630+25 - 631+13, RT.
STA. 630+25 - 631+16, LT.
STA. 801+46 - 802+18, RT.
STA. 803+41 - 805+15, LT.

24" STOP BAR
STA. 631+13, RT
STA. 802+19, RT.
STA. 803+40, LT.

LETTER OR SYMBOL
STA. 801+51, RT. (RT. ARROW)
STA. 802+10, RT. (RT. ARROW)
STA. 803+50, LT. (LT. ARROW)
STA. 803+62, LT. (ONLY)
STA. 804+98, LT. (LT. ARROW)
STA. 805+11, LT. (ONLY)
STA. 631+04, RT. (LT. ARROW)
STA. 631+04, RT. (RT. ARROW)

DURABLE CROSSWALK MARKING
STA. 631+17 - 631+25, LT. - RT.
STA. 802+27 - 802+33, RT. - LT.

PEDESTRIAN LIGHT POLE BASE
STA. 631+17.91, LT.
STA. 631+18.63, RT.
STA. 802+26.48, LT.
STA. 802+27.27, RT.

TRAFFIC SIGNAL HEAD POLE BASE
STA. 631+19.74, LT.
STA. 631+20.43, RT.
STA. 802+24.14, LT.
STA. 802+25.98, RT.

REMOVING SIGNS
STA. 631+59, RT
STA. 801+10, LT

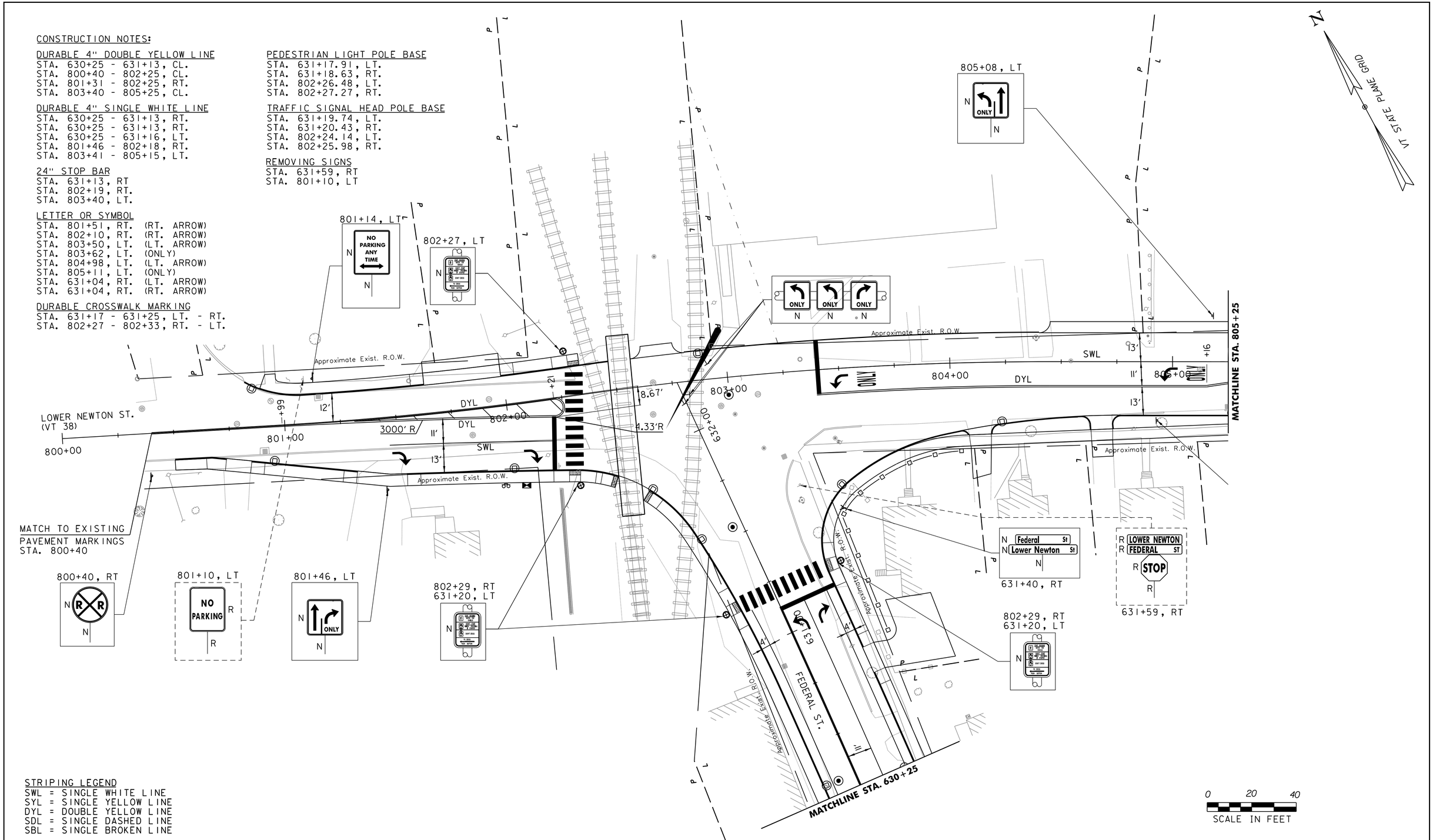

STRIPING LEGEND
SWL = SINGLE WHITE LINE
SYL = SINGLE YELLOW LINE
DYL = DOUBLE YELLOW LINE
SDL = SINGLE DASHED LINE
SBL = SINGLE BROKEN LINE

SIGNING LEGEND
N = NEW
R = REMOVE
R&S = REMOVE AND SALVAGE
R&R = REMOVE AND RESET
RET = RETAIN
S = SALVAGE
B-B = BACK TO BACK

PROJECT NAME: ST. ALBANS	
PROJECT NUMBER: HPP 8000(17)	
FILE NAME: 57414_BDR_SPM.dgn	PLOT DATE: 3/4/2016
PROJECT LEADER: J. D. SALADINO	DRAWN BY: G. GOMEZ
DESIGNED BY: D. M. PECK	CHECKED BY: M.J. SERVETAS
SIGN & PAVEMENT MARKING PLANS (15 OF 16)	SHEET 108 OF 230

CONSTRUCTION NOTES:

DURABLE 4" SINGLE WHITE LINE
STA. 805+90 - 809+02, RT.
STA. 1001+80 - 1002+27, RT.
STA. 1003+77 - 1004+65, LT.

DURABLE 4" DOUBLE YELLOW LINE
STA. 805+25 - 809+04, CL.
STA. 1001+80 - 1002+27, CL.
STA. 1003+81 - 1004+65, CL.

DURABLE CROSSWALK MARKING
STA. 808+98 - 809+23, LT. - RT.
STA. 1002+33 - 1002+41, LT. - RT.
STA. 1002+51 - 1002+69, RT.

24" STOP BAR
STA. 809+01.69, RT.
STA. 1002+27.56, RT.
STA. 1003+77.10, LT.
STA. 1003+83.10, LT.

LETTER OR SYMBOL
STA. 806+02, RT. (ONLY)
STA. 806+15, RT. (LT. ARROW)
STA. 807+49, RT. (ONLY)
STA. 807+61, RT. (LT. ARROW)
STA. 808+82, RT. (ONLY)
STA. 808+93, RT. (LT. ARROW)
STA. 1002+06, RT. (ONLY)
STA. 1002+18, RT. (LT. ARROW)
STA. 1003+84, LT. (RT. ARROW)
STA. 1003+96, LT. (THRU/LT. ARROW)
STA. 1003+98, LT. (ONLY)

REMOVING SIGNS
STA. 806+82, LT (2)
STA. 807+56, RT
STA. 1002+03, LT
STA. 1002+74, RT
STA. 1002+80, LT
STA. 1002+90, RT (2)
STA. 1002+91, LT
STA. 1002+96, LT
STA. 1003+03, RT
STA. 1003+09, RT
STA. 1003+22, RT
STA. 1003+66, LT
STA. 1003+70, LT (2)
STA. 1004+71, LT

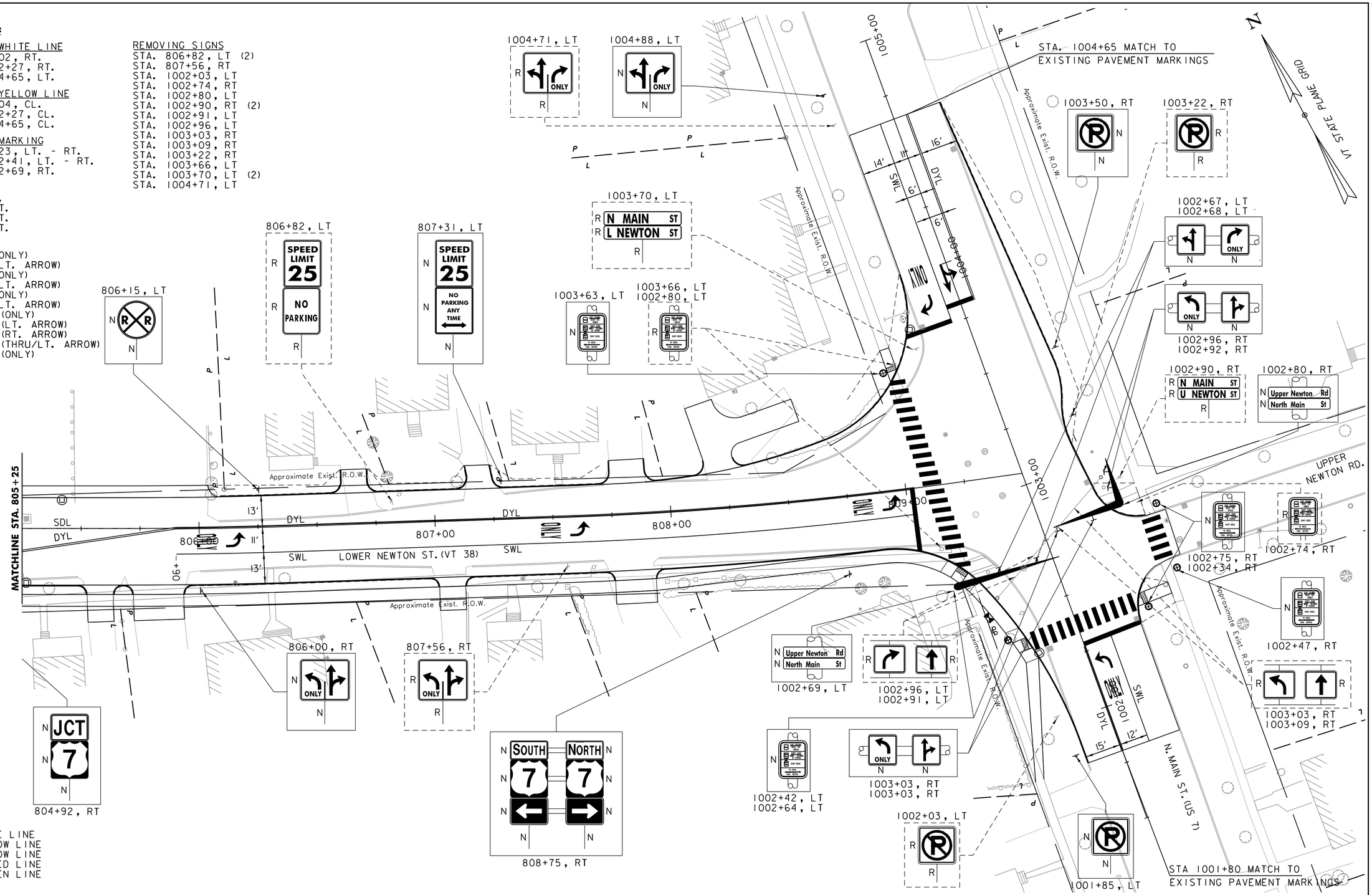

STRIPING LEGEND
SWL = SINGLE WHITE LINE
SYL = SINGLE YELLOW LINE
DYL = DOUBLE YELLOW LINE
SDL = SINGLE DASHED LINE
SBL = SINGLE BROKEN LINE

SIGNING LEGEND
N = NEW
R = REMOVE
R&S = REMOVE AND SALVAGE
R&R = REMOVE AND RESET
RET = RETAIN
S = SALVAGE
B-B = BACK TO BACK

0 20 40
SCALE IN FEET

vhb

PROJECT NAME: ST. ALBANS	
PROJECT NUMBER: HPP 8000(17)	
FILE NAME: 57414_BDR_SPM.dgn	PLOT DATE: 3/4/2016
PROJECT LEADER: J. D. SALADINO	DRAWN BY: G. GOMEZ
DESIGNED BY: D. M. PECK	CHECKED BY: M.J. SERVETAS
SIGN & PAVEMENT MARKING PLANS (16 OF 16)	SHEET 109 OF 230

TRAFFIC SIGNAL PLAN NOTES

1. ALL MATERIALS AND CONSTRUCTION SHALL CONFORM TO THE STATE OF VERMONT AGENCY OF TRANSPORTATION'S "STANDARD SPECIFICATIONS FOR CONSTRUCTION", DATED 2011, WITH CURRENT MODIFICATIONS. ALL TRAFFIC SIGNAL CONTROLLERS SHALL BE NEMA TS2, TYPE 2.

2. OVERHEAD SIGN/SIGNAL SUPPORTS SHALL CONFORM TO AASHTO'S PUBLICATION ENTITLED "STANDARD SPECIFICATIONS FOR STRUCTURAL SUPPORTS FOR HIGHWAY SIGNS, LUMINAIRES, AND TRAFFIC SIGNALS", DATED 2009 OR ITS LATEST INTERIMS.

3. THE DESIGN CALCULATIONS SHALL TAKE INTO ACCOUNT THE FOLLOWING CRITERIA:

STRUCTURE CRITERIA

DESIGN LIFE: 50 YEARS
WIND LOAD: 90 MPH, UNLESS SPECIAL SITE CONDITIONS DICTATE
ICE LOAD PER AASHTO'S PUBLICATION ENTITLED 'STANDARD SPECIFICATIONS FOR STRUCTURAL SUPPORTS FOR HIGHWAY SIGNS, LUMINAIRES, AND TRAFFIC SIGNALS', DATED 2009 WITH ITS LATEST INTERIMS.

FATIGUE CRITERIA

FATIGUE CATEGORY: I FOR MAST ARM SIGN STRUCTURES, 2 FOR SIGNAL MAST ARMS
VORTEX SHEDDING: INCLUDE NATURAL WIND GUST: INCLUDE TRUCK INDUCED WIND GUSTS: INCLUDE FOR ROADWAYS WHERE SPEED LIMIT IS 40 MPH OR GREATER
GALLOPING: DO NOT INCLUDE IN DESIGN CALCULATIONS

FOUNDATION CRITERIA

CONCRETE: CONCRETE, HIGH PERFORMANCE CLASS B, STATE OF VERMONT, AGENCY OF TRANSPORTATION'S 'STANDARD SPECIFICATIONS FOR CONSTRUCTION', DATED 2011, SECTION 501 REINFORCING STEEL: STATE OF VERMONT, AGENCY OF TRANSPORTATION'S 'STANDARD SPECIFICATIONS FOR CONSTRUCTION', DATED 2011, SUB-SECTION 713.01

ALLOWABLE BEARING CAPACITY: IN ACCORDANCE WITH GEOTECHNICAL REPORT
INTERNAL SOIL FRICTION ANGLE, : IN ACCORDANCE WITH GEOTECHNICAL REPORT

4. ANCHOR BOLTS
A MINIMUM OF FOUR STAINLESS STEEL ANCHOR BOLTS WITH TWO HEXAGON NUTS, ONE WASHER AND ONE LOCK WASHER PER BOLT SHALL BE FURNISHED WITH EACH POLE. ANCHOR BOLT PLATES, WHEN USED, SHALL ALSO BE STAINLESS STEEL. STATE OF VERMONT, AGENCY OF TRANSPORTATION'S 'STANDARD SPECIFICATIONS FOR CONSTRUCTION', DATED 2011, SUB-SECTION 714.09.

5. FLANGE BOLTS

ALL FLANGE BOLTS AND HEX NUTS SHALL BE HIGH STRENGTH STEEL AND SHALL CONFORM TO STATE OF VERMONT, AGENCY OF TRANSPORTATION'S 'STANDARD SPECIFICATIONS FOR CONSTRUCTION', DATED 2011, SUB-SECTION 714.05.

6. HORIZONTAL AND VERTICAL MEMBERS
STEEL TUBES SHALL BE FORMED AND WELDED WITH ONE CONTINUOUS LONGITUDINAL WELD ONLY. AFTER FORMING AND WELDING THEY SHALL BE COLD ROLLED TO ENSURE UNIFORMITY OF SIZE AND SMOOTHNESS OF WELD. THERE SHALL BE NO TRANSVERSE WELDING EXCEPT AT THE FLANGE CONNECTIONS AND POLE BASE PLATES, WHERE THE TUBES SHALL TELESCOPE THE FLANGES AND PLATES AND BE CONTINUOUSLY WELDED BOTH SIDES INSIDE AND OUT TO WITHSTAND THE FULL TRANSFER OF THE BENDING STRENGTH TO THE BOLTS. OPTIONALLY, THE MEMBERS MAY BE A SERIES OF TWO OR THREE DIFFERENT DIAMETER PIPES WELDED TOGETHER. STEEL TUBES SHALL BE CONSTRUCTED FROM MATERIALS CONFORMING TO STATE OF VERMONT, AGENCY OF TRANSPORTATION'S 'STANDARD SPECIFICATIONS FOR CONSTRUCTION', DATED 2011, SUB-SECTION 752.03.

7. GALVANIZING

ANY STEEL COMPONENTS, EXCEPT CONCRETE REINFORCING AND STAINLESS STEEL HARDWARE THAT ARE NOT CALLED OUT TO BE PAINTED BLACK, ARE TO BE HOT DIPPED GALVANIZED AFTER FABRICATION. THE ASSEMBLIES SHALL BE DESIGNED AND FABRICATED TO PERMIT GALVANIZING ON ALL INTERIOR AND EXTERIOR SURFACES AND SHALL BE FREE OF POCKETS AND OTHER STRUCTURAL OBSTRUCTIONS THAT WILL NOT PERMIT PROPER DEPOSITION OF ZINC COATING. GALVANIZING SHALL BE IN ACCORDANCE WITH STATE OF VERMONT, AGENCY OF TRANSPORTATION'S 'STANDARD SPECIFICATIONS FOR CONSTRUCTION', DATED 2011, SUB-SECTION 752.02b.

8. WELDING

ALL DESIGN DETAILS, WORKMANSHIP, PROCEDURES AND INSPECTION SHALL CONFORM TO VTRANS SPECIFICATIONS SUB-SECTION 506.10.

9. FOUNDATIONS

A. FOUNDATIONS SHALL BE DESIGNED IN ACCORDANCE WITH THE MREI 10-01 GUIDELINES ISSUED BY THE AGENCY.

B. FOUNDATIONS SHALL BE CONSTRUCTED IN ACCORDANCE WITH THE FOLLOWING NOTES:

1. A MINIMUM EMBEDMENT DEPTH OF 5 FEET SHALL BE USED FOR ALL SPREAD FOOTING FOUNDATIONS: MEASURED FROM THE FINISHED GROUND SURFACE ELEVATION TO THE BOTTOM OF THE FOOTING ELEVATION.

2. EXCEPT FOR THE UPPERMOST 2 FEET OF SOIL, DRILLED SHAFT FOUNDATIONS SHALL BE POURED AGAINST UNDISTURBED MATERIAL; THE TOP 2 FEET OF SOIL SHALL BE NEGLECTED FOR DESIGN PURPOSES. A DISPOSABLE CIRCULAR CONCRETE FORM, IF USED, SHALL NOT BE PLACED DEEPER THAN 2 FEET, IN ORDER NOT TO REDUCE THE FRICTION BETWEEN THE SOIL AND THE CONCRETE.

3. AS AN ALTERNATIVE TO THE DRILLED HOLES, FOUNDATIONS MAY BE POURED IN EXCAVATED HOLES USING THE PROPER FORMS, WHICH SHALL BE REMOVED. THE EXCAVATED HOLES SHALL BE AT LEAST 2 FEET CLEAR OF THE FOUNDATION SIDES AND 1 FOOT DEEPER THAN THE FOUNDATION. CARE SHALL BE TAKEN TO AVOID EXCAVATING AROUND THE TOP OF THE FOUNDATION. DESIGN LIMITS AS FOR AN AUGURED FOUNDATION APPLY.

4. BACKFILL MATERIAL PLACED ADJACENT TO THE FOUNDATION SHALL MEET THE REQUIREMENTS FOR GRANULAR BACKFILL FOR STRUCTURES, VTRANS SPECIFICATION SUB-SECTION 704.08. BACKFILL MATERIAL SHALL BE COMPACTED AS DESCRIBED IN VTRANS CONSTRUCTION SPECIFICATIONS SUB-SECTION 204.08.

5. CONCRETE FOR FOUNDATION SHALL CONFORM TO THE REQUIREMENTS OF 501.34 CONCRETE, HIGH PERFORMANCE CLASS B. IF DRILLED SHAFT FOUNDATIONS ARE REQUIRED, THE CONCRETE SPECIFICATIONS MAY NEED TO BE ADJUSTED FOR CONSTRUCTIBILITY ISSUES. HOWEVER, IF REQUIRED, THE CONTRACTOR SHALL SUBMIT ANY CHANGES TO THE CONCRETE SPECIFICATION FOR REVIEW BY THE VTRANS PROJECT MANAGER.

6. STEEL PILES SHALL MEET THE REQUIREMENTS OF SECTION 505.

7. WHEN THE DESIGN DEPTH OF A FOUNDATION CANNOT BE OBTAINED DUE TO UNFORESEEN FIELD CONDITIONS, THE CONTRACTOR SHALL NOTIFY THE ENGINEER FOR THE MANUFACTURER TO OBTAIN A REVISED FOUNDATION DESIGN. SUCH A REVISION SHALL BE SUBMITTED TO THE VERMONT, AGENCY OF TRANSPORTATION, PROJECT MANAGER AND MAY REQUIRE UP TO A 4 WEEK REVIEW PERIOD BY VTRANS.

C. SIGNALS/SIGNS SHALL BE INSTALLED AND LEVELED AND POLES SHALL BE PLUMB PRIOR TO PLACING GROUT UNDER POLE BASE. GROUT MATERIAL SHALL BE NON-SHRINKING MORTAR CONFORMING TO SUB-SECTION 707.03 (MORTAR TYPE IV).

10. EACH OVERHEAD TRAFFIC SIGNAL/SIGN SUPPORT SHALL BE GROUNDED. THE GROUND SHALL CONSIST OF:

A) AN INTERNAL GROUND LUG OPPOSITE THE HAND HOLE.

B) A #6 AWG. (MIN.) SOFT DRAWN COPPER GROUNDING ELECTRODE CONDUCTOR.

C) A 5/8" X 8' (MIN.) COPPER CLAD GROUNDING ELECTRODE. THE RESISTANCE TO GROUND SHALL BE 25 OHMS OR LESS. ADDITIONAL GROUNDING ELECTRODES MAY BE REQUIRED (MINIMUM SPACING SHALL BE 6 FEET).

WHEN A POWER SERVICE, METER AND DISCONNECT ARE ATTACHED TO A POLE, THERE SHALL BE A CONTINUOUS GROUNDING ELECTRODE CONDUCTOR FROM THE METER AND DISCONNECT WHICH MAY RUN INTERNAL TO THE UPRIGHT, THROUGH THE 1/2 INCH FLEXIBLE TUBING IN THE CONCRETE BASE TO THE REQUIRED GROUNDING ELECTRODE(S). THE GROUNDING ELECTRODE CONDUCTOR FROM THE POLE GROUNDING LUG, CONTROLLER CABINET AND/OR LUMINAIRE MAY ATTACH TO THIS CONTINUOUS GROUNDING ELECTRODE CONDUCTOR FROM THE SERVICE METER AND DISCONNECT. THE CONTRACTOR SHALL PERFORM A RESISTANCE TO GROUND TEST ON THE CONTINUOUS GROUNDING ELECTRODE CONDUCTOR FROM THE SERVICE METER AND DISCONNECT AND PROVIDE A WRITTEN STATEMENT TO THE AREA ELECTRICAL INSPECTOR THAT THE GROUNDING ELECTRODE CONDUCTOR IS CONTINUOUS FROM THE SERVICE METER AND DISCONNECT AND THE RESISTANCE TO GROUND IS 25 OHMS OR LESS.

11. HORIZONTAL MEMBERS SHALL BE CAMBERED AND THE VERTICAL POLES BACK RAKED (WHERE APPLICABLE) TO THE ANTICIPATED DEAD LOAD DEFLECTION PLUS THE CAMBER, IF ANY, SPECIFIED ON THE PLANS.

12. AN EQUIVALENT ALTERNATE DESIGN MAY BE SUBSTITUTED FOR THE DETAILS AND MATERIALS SHOWN.

13. THE DETAILS OF DESIGN FOR THE STRUCTURE AND FOUNDATION(S) ARE TO BE SUPPLIED BY THE CONTRACTOR AND/OR BY THE MANUFACTURER. THE STRUCTURE SHALL BE DESIGNED TO RESIST THE MAXIMUM LOADING AS OUTLINED IN THE AASHTO STANDARD SPECIFICATIONS (SEE NOTE 2). ALL DESIGN CALCULATIONS FOR THE STRUCTURE AND THE FOUNDATION(S) SHALL BE CHECKED AND STAMPED BY AN ENGINEER REGISTERED IN THE STATE OF VERMONT PRIOR TO SUBMITTAL OF THE FABRICATION DRAWINGS TO THE VERMONT AGENCY OF TRANSPORTATION.

14. THE CONTRACTOR SHALL SUBMIT THREE (3) COPIES OF THE DESIGN CALCULATIONS TO THE VERMONT AGENCY OF TRANSPORTATION, PROJECT MANAGER, SHOWING THE FOLLOWING INFORMATION FOR EACH OF THE VERTICAL AND HORIZONTAL COMPONENTS OF THE STRUCTURE AND FOUNDATION:

A. THE DESIGN AXIAL AND SHEAR FORCES AND BENDING AND TORSIONAL MOMENTS ACTING AT THE TOP OF THE FOUNDATION.

B. THE DESIGN AXIAL, BENDING AND SHEAR STRESSES AND THE COMBINED STRESS RATIO.

C. THE ALLOWABLE AXIAL, BENDING, AND SHEAR STRESSES.

D. ITEMS A, B, D - SHALL BE SHOWN FOR EACH OF THE GROUP LOADINGS (I,II,III) AND FOR THE BASIC WIND LOAD APPLIED TO THE TWO CASES OUTLINED IN THE AASHTO STANDARD SPECIFICATIONS (SEE NOTE 2) SECTION 1.2.5 (D)(4).

E. FAILURE TO SUPPLY THE PROPER DESIGN INFORMATION SHALL BE CAUSE FOR REJECTION OF THE STRUCTURE.

F. A MINIMUM OF FOUR (4) WEEKS SHALL BE REQUIRED FOR REVIEW BY THE VERMONT AGENCY OF TRANSPORTATION AND THE ENGINEER OF RECORD (VHB, INC).

G. EVERY MEMBER AND CONNECTION IN AN OVERHEAD TRAFFIC SIGN SUPPORT SHALL HAVE A MAXIMUM DESIGN RATIO OF 85% TO PROVIDE RESIDUAL CAPACITY FOR FUTURE MODIFICATIONS TO SIGN SIZE OR CONFIGURATIONS.

15. FABRICATION DRAWINGS (6 COPIES OF EACH) SHALL BE SUBMITTED TO THE STATE OF VERMONT, AGENCY OF TRANSPORTATION, PROJECT MANAGER FOR APPROVAL PRIOR TO FABRICATION. THE FABRICATION DRAWINGS SHALL INCLUDE THE FOLLOWING INFORMATION:

A. DETAILED DRAWING OF EACH COMPONENT OF THE STRUCTURE.

B. MATERIAL SPECIFICATION FOR EACH COMPONENT OF THE STRUCTURE, EITHER BY COMPLETE SPECIFICATION OR REFERENCE TO APPLICABLE ASTM STANDARDS.

C. NOTATION OF PROJECT NAME, PROJECT NUMBER, ROUTE NUMBER, AND STRUCTURE STATIONING (TO BE INCLUDED ON EACH SHEET).

D. DETAILS FOR LOCATION OF SIGNS/SIGNALS AND ATTACHMENT HARDWARE FOR THE SUPPORT STRUCTURE.

E. ALL ELEVATIONS AND DIMENSIONS NECESSARY TO PROVIDE A COMPLETE SET OF RECORD PLANS.

F. DEAD LOAD DEFLECTION AND CAMBER INFORMATION.

G. WELDING DETAILS AND PROCEDURES ARE REQUIRED FOR ALL WELDS. PROCEDURES SHALL BE SUBMITTED FOR APPROVAL WITH REFERENCE TO EACH WELD IDENTIFIED ON THE FABRICATION DRAWINGS. (SEE SUB-SECTION 506.10).

H. THE CONTRACTOR SHALL BE RESPONSIBLE FOR COMPLETION OF THE STRUCTURE AND FOUNDATION DATA ON THE DETAIL SHEETS.

SEE NEXT SHEET FOR CONTINUATION OF TRAFFIC SIGNAL PLAN NOTES.

TRAFFIC SIGNAL PLAN NOTES (CONTINUED)

16. THE TRAFFIC SIGNALS SHALL BE MOUNTED TO THE ARM OR POLE USING A FIXED MOUNT SYSTEM, UNLESS OTHERWISE NOTED ON THE CROSS SECTION SHEET. FOR SIGNALS MOUNTED ON A MAST ARM, THE MAST ARM AND MOUNTING POINT SHALL BE IN THE MIDDLE OF THE SIGNAL HEAD.

17. BASE PLATES SHALL BE STAMPED WITH THE VERTICAL POLE DIAMETER, HEIGHT, YIELD STRENGTH, GAUGE AND THE HORIZONTAL MEMBER DIAMETER, LENGTH, YIELD STRENGTH, GAUGE. ALTERNATELY, THE INFORMATION MAY BE STAMPED ON A METAL TAG RIVETED TO THE POLE NEAR THE HAND HOLE.

18. SEE STANDARD E-171A FOR ADDITIONAL NOTES.

19. SEE SHEETS 112-124 FOR SIGNALIZED INTERSECTION LAYOUTS.

20. SEE SPECIAL PROVISIONS FOR ADDITIONAL DETAILS FOR:
    - A ACCESSIBLE PEDESTRIAN SIGNALS
    - B RADAR STOP BAR DETECTION SYSTEM
    - C PAINTED SIGNAL STRUCTURES

21. FOLLOWING ACCEPTANCE OF THE NEW SIGNAL EQUIPTMENT, THE EXISTING SIGNAL EQUIPTMENT, CONTROLLERS AND STOP CONTROL DEVICES SHALL BE SALVAGE TO THE CITY OF ST ALBANS AT A LOCATION DIRECTED BY THE RESIDENT ENGINEER. ALL OTHER REMOVED SIGNAL EQUIPTMENT THAT IS NOT REQUIRED OR ACCEPTED BY THE CITY SHALL BE REMOVED AND DISPOSED OF BY THE CONTRACTOR IN A MANOR ACCEPTABLE TO THE ENGINEER.

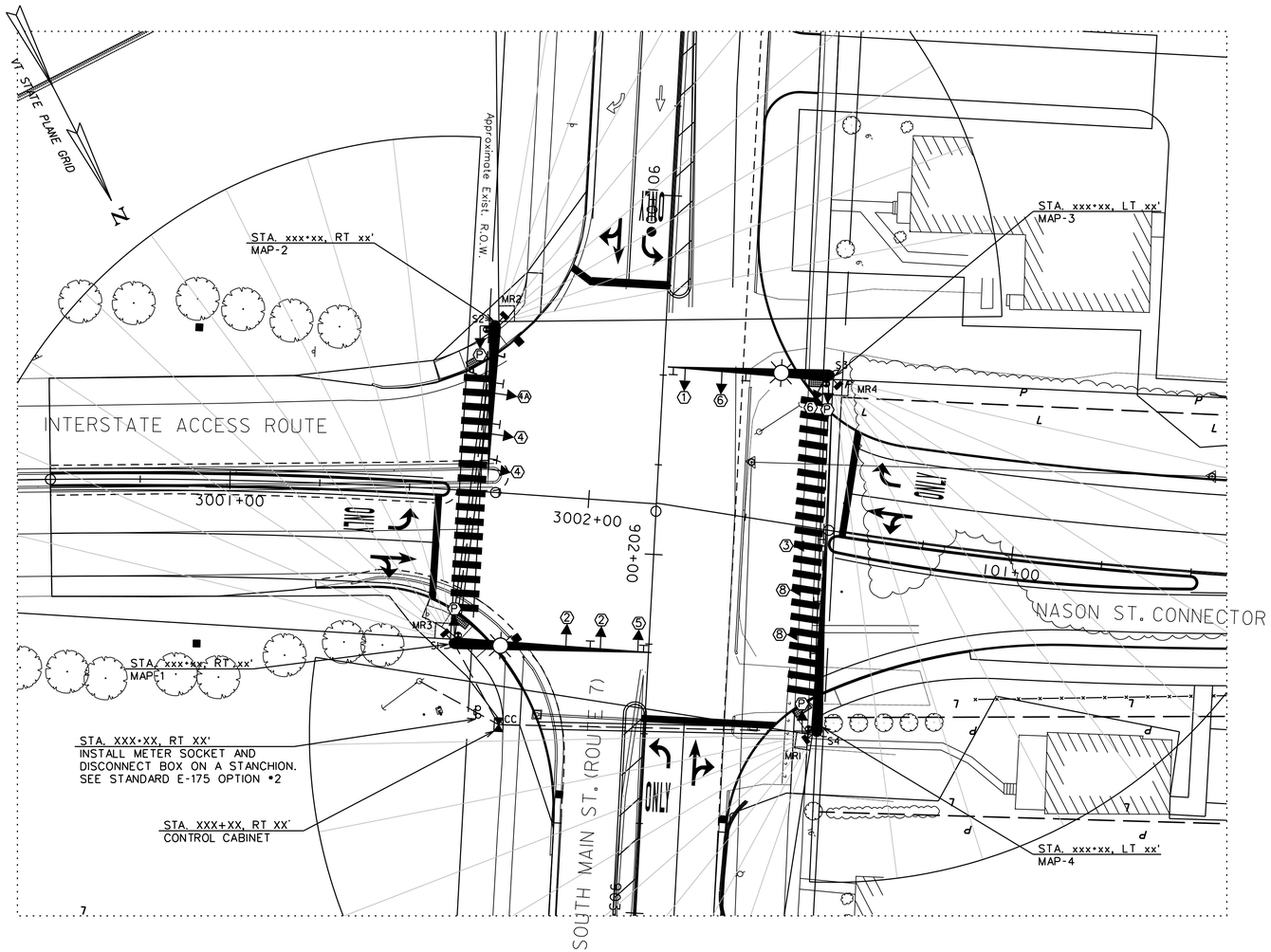

LIST OF MAJOR EQUIPMENT
SOUTH MAIN ST AND NASON ST INTERSECTION

EQUIPMENT ITEM 678.15	QUANTITY	EQUIPMENT ITEM 678.15	QUANTITY
TRAFFIC SIGNAL CONTROLLER ECONOLITE MODEL ASC/3 (TS2, TYPE 2) OR APPROVED EQUAL	1	ONE WAY, 3-SECTION, 12-INCH POLYCARBONATE MAST ARM MOUNTED LED TRAFFIC SIGNAL HEAD WITH TUNNEL VISORS AND LOUVERED BACKPLATES WITH ALL PIECES PAINTED BLACK	12
P44 BASE MOUNTED CONTROLLER CABINET WITH EXTENDED BASE ON A CONCRETE FOUNDATION PAINTED BLACK WITH ANCILLARY CONTROL EQUIPMENT	1	BRACKET MOUNTED 16-INCH LED COUNTDOWN PEDESTRIAN SIGNAL HEADS PAINTED BLACK	4
BLACK PAINTED STEEL MAST ARM SIGNAL POLE WITH 45 FOOT MAST ARM (MAP-2)	1	VTRANS SPEC ACCESSIBLE PEDESTRIAN PUSHBUTTONS WITH R10-3e TYPE SIGN ASSEMBLY	4
BLACK PAINTED STEEL MAST ARM SIGNAL POLE WITH 45 FOOT MAST ARM AND 8 FOOT LIGHTING BRACKET ARM (MAP-3)	1	ASTRO-BRACKETS OR EQUAL	12
		BRACKET SIGNAL MOUNTINGS	4
BLACK PAINTED STEEL MAST ARM SIGNAL POLE WITH 55 FOOT MAST ARM AND 8 FOOT LIGHTING BRACKET ARM (MAP-1)	1	MATRIX RADAR SENSORS WITH SENSOR CABLES OR EQUAL	4
		METER SOCKET DISCONNECT WITH BYPASS ON PEDESTAL	1
BLACK PAINTED STEEL MAST ARM SIGNAL POLE WITH 55 FOOT MAST ARM (MAP-4)	1	GPS UNIT	1

RADAR STOP BAR DETECTOR SCHEDULE

ITEM 678.15

DETECTORS					SETTINGS	
PLAN ID	STREET	DIRECTION	LANE	CALL Ø	TYPE	DETECTOR NUMBER
MR1	SOUTH MAIN ST	SOUTHBOUND	ALL APPROACHES	1/6	RADAR	1
MR2	SOUTH MAIN ST	NORTHBOUND	ALL APPROACHES	2/5	RADAR	2
MR3	ST ALBANS STATE HWY ACCESS	WESTBOUND	ALL APPROACHES	3/8	RADAR	3
MR4	NASON ST CONNECTOR	EASTBOUND	ALL APPROACHES	4	RADAR	4

ALL DETECTION SHOULD BE SET TO NON LOCKING OPERATIONS

ELECTRICAL CONDUIT SCHEDULE

ITEM 678.21

I.D.	STATION	TYPE
S1		SPARE SWEEP AT MAP-1
S2		SPARE SWEEP AT MAP-2
S3		SPARE SWEEP AT MAP-3
S4		SPARE SWEEP AT MAP-4

SIGNAL FACE ARRANGEMENT

(12" LED LENSES W/ 5" BACKPLATES) (16" LED)

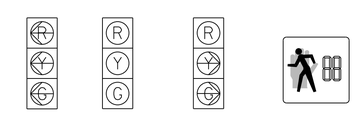

LEGEND

NEW	LEGEND
CC	CONTROLLER CABINET
	SIGNAL HEAD
	CONDUIT
	PEDESTAL POST
	STANCHION
	MAST ARM
	PEDESTRIAN PUSH BUTTON
PB	PULL BOX
	OVERHEAD SIGN
	LUMINAIRE
MR#	MATRIX RADAR SENSOR
	MATRIX RADAR DETECTION ZONE

WIRED CONDUIT (PVC) AND ELECTRICAL CONDUIT SLEEVE SCHEDULE

ITEM NUMBER	678.21	678.23	678.30	
FROM/TO	ELECTRICAL CONDUIT SPARE 2"	WIRED CONDUIT 2"	CONDUIT SLEEVE 8"	DESCRIPTION
POWER TO STANCHION	15	15		POWER (INCLUDES RISER)
STANCHION TO CABINET	5	5		POWER
CABINET TO MAP-1	25	50		MAP-1, MAP-2 (3 RUNS)
MAP-1 TO MAP-2	90	180	70	MAP-2 (3 RUNS)
CABINET TO MAP-4	90	180	65	MAP-4, MAP-3 (3 RUNS)
MAP-4 TO MAP-3	100	200	85	MAP-3 (3 RUNS)
SUB-TOTALS	325	630	220	
ROUNDING	5	5	5	
TOTALS	330	635	225	

2016 DHV WEEKDAY TRAFFIC DATA

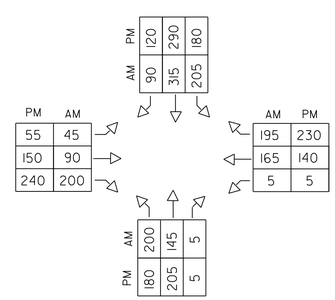

EQUIPMENT NOTES

(A) SEE STANDARDS E-170, 171A, 171B, 171C, 173, & 175 FOR ADDITIONAL INFORMATION.

(B) SEE TRAFFIC SIGNAL NOTE SHEETS 110,111 AND 113 AND SINGLE MAST ARM CANTILEVER/FOOTING DETAIL SHEET 114 FOR ADDITIONAL INFORMATION.

(C) FOR SIGN DETAILS, SEE SHEETS 94-109.

0 20 40
SCALE IN FEET

PROJECT NAME: ST. ALBANS
PROJECT NUMBER: HPP 8000(17 101/100

FILE NAME: 57414_TSPS1.dgn
PROJECT LEADER: M.A. COLGAN
DESIGNED BY: M. GRAHAM
TRAFFIC SIGNAL SHEET (1 OF 3)

PLOT DATE: 3/4/2016
DRAWN BY: J. ROBERT
CHECKED BY: C. BOBAY
SHEET 112 OF 230

TRAFFIC SIGNAL NOTES

A. NEW EQUIPMENT

1. ALL SIGNAL HEADS MOUNTED ON CANTILEVER ARMS SHALL BE POLYCARBONATE. BACKPLATES SHALL BE REQUIRED ON ALL SIGNAL HEADS.
2. THE TRAFFIC SIGNAL CONTROLLER AND ANCILLARY EQUIPMENT SHALL BE MANUFACTURED BY ECONOLITE CONTROL PRODUCTS, INC. OR NAZTEC, INC. OR APPROVED EQUIVALENT. TRAFFIC SIGNAL CONTROLLER SHALL BE NEMA TS2, TYPE 2, PROVIDED IN A NEMA "P"TYPE GROUND MOUNTED CABINET WITH BASE EXTENSION INSTALLED AS SHOWN ON THE TRAFFIC SIGNAL PLAN.
3. A DISCONNECT BREAKER FOR EACH CIRCUIT SHALL BE INSTALLED IN A RAINPROOF (NEMA 3R), LOCKED CABINET ON A STANCHION NEXT TO OR BELOW THE METER SOCKET. RECOMMEND OPTION #2 ON STD E-175.
4. ALL SIGNAL HEADS SHALL BE 12-INCH LIGHT EMITTING DIODES (LED).
5. LUMINAIRE ON MAST ARM SHALL BE AN L.E.D. FIXTURE.
6. ALL SIGNAL EQUIPMENT SHALL BE PAINTED FLAT BLACK INCLUDING MAST ARM POLES, MAST ARMS, AND LUMINAIRE BRACKET ARMS.

B. SIGNAL OPERATION

1. UPON STARTUP THE SIGNAL TIMINGS SHOWN ON THE PLANS MAY REQUIRE FINE-TUNING IN THE FIELD BASED ON TRAFFIC OBSERVATION.
2. THE TRAFFIC SIGNALS SHALL NOT BE OPERATED BEFORE PAVEMENT MARKINGS AND SIGNAL RELATED SIGNING IS IN PLACE.
3. ALL SIGNALS SHALL DWELL ON THE US 7 THRU MOVEMENT PHASES (2+6).
4. US 7 THRU PHASES 2+6 SHALL BE USED FOR THE START-UP PHASE FOLLOWING FLASHING OPERATION.
5. THE EASTBOUND RIGHT TURN SHALL OPERATE AS AN OVERLAP TO PHASE 5

C. TRAFFIC SIGNAL CONDUIT

1. ALL TRAFFIC SIGNAL CONDUIT SHALL BE PVC, SCHEDULE 80
2. MINIMUM CONDUIT SIZES SHALL BE 2-INCH FOR ALL APPLICATIONS
3. WHEN new CONDUIT IS PLACED BELOW THE ROADWAY OR ACROSS SIDE ROADS, IT SHALL BE PLACED IN AN PVC ELECTRICAL CONDUIT SLEEVE, SIZE AS SHOWN ON THE PLANS (8" MINIMUM OR MATCHING EXISTING SLEEVE SIZE).
4. WHERE PLANS INDICATE 2 CONDUIT RUNS, 1 SHALL BE FOR THE SIGNAL CABLE AND 1 SHALL BE A SPARE CONDUIT. WHERE PLANS INDICATE 3 CONDUIT RUNS, 1 SHALL BE FOR THE SIGNAL CABLE, 1 SHALL BE FOR THE RADAR DETECTION, AND 1 SHALL BE A SPARE CONDUIT.

D. VEHICLE DETECTION

1. WAVETRANIX MATRIX RADAR SENSORS SHALL BE INSTALLED ON THE SIGNAL POLE UPRIGHT BELOW THE MAST ARM AND AIMED TO PICK UP VEHICLE DETECTION
2. ANY CABLE FOR THE RADAR STOP BAR DETECTION SHALL BE INCIDENTAL TO ITEM 678.15.
3. ALL DETECTORS SHALL FAIL IN THE "ON" MODE.

E. GENERAL

1. THE CONTRACTOR SHALL ACQUIRE ALL NECESSARY PERMITS AND MAKE ALL NECESSARY ARRANGEMENTS WITH THE UTILITY COMPANY TO MAINTAIN THE EXISTING POWER SUPPLY TO THE SIGNAL EQUIPMENT.
2. SEE SUPPLEMENTAL SPECIFICATIONS FOR SECTIONS 678, 679, 752 & 753 FOR ADDITIONAL INFORMATION.
3. SEE THE CONTROLLER ID PLAQUE DETAIL ON THIS SHEET.

TIMING AND PHASING

PHASE 2+6 (DWELL)

		R/W	CLEAR TO Ø 9	CLEAR TO Ø 3+8	CLEAR TO Ø 4+8	CLEAR TO Ø 1+5
OFF PEAK REST OF DAY	VEHICLE	3				
	MINIMUM	10	4 2	4 2	4 2	4 2
	MAXIMUM	35	4 2	4 2	4 2	4 2
	MAXIMUM2					
	MAXIMUM3					
	PED ACT					
AM PEAK 6-8 AM	VEHICLE	3				
	MINIMUM	10	4 2	4 2	4 2	4 2
	MAXIMUM	25	4 2	4 2	4 2	4 2
	MAXIMUM2					
	MAXIMUM3					
	PED ACT					
PM PEAK 2-6 PM	VEHICLE	3				
	MINIMUM	10	4 2	4 2	4 2	4 2
	MAXIMUM	40	4 2	4 2	4 2	4 2
	MAXIMUM2					
	MAXIMUM3					
	PED ACT					
	FACE 1	~~R~~	~~R~~ ~~R~~	~~R~~ ~~R~~	~~R~~ ~~R~~	~~R~~ ~~R~~
	FACE 2	G	Y R	Y R	Y R	Y R
	FACE 3	~~R~~	~~R~~ ~~R~~	~~R~~ ~~R~~	~~R~~ ~~R~~	~~R~~ ~~R~~
	FACE 4	R	R R	R R	R R	R R
	FACE 4A	R	R R	R R	R R	R R
	FACE 5	~~R~~	~~R~~ ~~R~~	~~R~~ ~~R~~	~~R~~ ~~R~~	~~R~~ ~~R~~
	FACE 6	G	Y R	Y R	Y R	Y R
	FACE 8	R	R R	R R	R R	R R
	PED	DW	DW DW	DW DW	DW DW	DW DW

PHASE 9

		R/W	CLEAR TO Ø 3+8	CLEAR TO Ø 4+8	CLEAR TO Ø 1+5	CLEAR TO Ø 2+6
OFF PEAK REST OF DAY	VEHICLE					
	MINIMUM					
	MAXIMUM					
	MAXIMUM2					
	MAXIMUM3					
	PED ACT	4 20	3 1	3 1	3 1	3 1
AM PEAK 6-8 AM	VEHICLE					
	MINIMUM					
	MAXIMUM					
	MAXIMUM2					
	MAXIMUM3					
	PED ACT	4 20	3 1	3 1	3 1	3 1
PM PEAK 2-6 PM	VEHICLE					
	MINIMUM					
	MAXIMUM					
	MAXIMUM2					
	MAXIMUM3					
	PED ACT	4 20	3 1	3 1	3 1	3 1
	FACE 1	~~R~~ ~~R~~	~~R~~ ~~R~~	~~R~~ ~~R~~	~~R~~ ~~R~~	~~R~~ ~~R~~
	FACE 2	R R	R R	R R	R R	R R
	FACE 3	~~R~~ ~~R~~	~~R~~ ~~R~~	~~R~~ ~~R~~	~~R~~ ~~R~~	~~R~~ ~~R~~
	FACE 4	R R	R R	R R	R R	R R
	FACE 4A	R R	R R	R R	R R	R R
	FACE 5	~~R~~ ~~R~~	~~R~~ ~~R~~	~~R~~ ~~R~~	~~R~~ ~~R~~	~~R~~ ~~R~~
	FACE 6	R R	R R	R R	R R	R R
	FACE 8	R R	R R	R R	R R	R R
	PED	W FD	DW DW	DW DW	DW DW	DW DW

PHASE 3+8

		R/W	CLEAR TO Ø 4+8	CLEAR TO Ø 1+5	CLEAR TO Ø 2+6
OFF PEAK REST OF DAY	VEHICLE	3			
	MINIMUM	10	4 2	4 2	4 2
	MAXIMUM	35	4 2	4 2	4 2
	MAXIMUM2		4 2	4 2	4 2
	MAXIMUM3		4 2	4 2	4 2
	PED ACT				
AM PEAK 6-8 AM	VEHICLE	3			
	MINIMUM	10	4 2	4 2	4 2
	MAXIMUM	35	4 2	4 2	4 2
	MAXIMUM2		4 2	4 2	4 2
	MAXIMUM3		4 2	4 2	4 2
	PED ACT				
PM PEAK 2-6 PM	VEHICLE	3			
	MINIMUM	10	4 2	4 2	4 2
	MAXIMUM	40	4 2	4 2	4 2
	MAXIMUM2		4 2	4 2	4 2
	MAXIMUM3		4 2	4 2	4 2
	PED ACT				
	FACE 1	~~R~~	~~R~~ ~~R~~	~~R~~ ~~R~~	~~R~~ ~~R~~
	FACE 2	R	R R	R R	R R
	FACE 3	~~G~~	~~Y~~ ~~R~~	~~Y~~ ~~R~~	~~Y~~ ~~R~~
	FACE 4	R	R R	R R	R R
	FACE 4A	R	R R	R R	R R
	FACE 5	~~R~~	~~R~~ ~~R~~	~~R~~ ~~R~~	~~R~~ ~~R~~
	FACE 6	R	R R	R R	R R
	FACE 8	G	G G	Y R	Y R
	PED	DW	DW DW	DW DW	DW DW

PHASE 4+8

		R/W	CLEAR TO Ø 1+5	CLEAR TO Ø 2+6	CLEAR TO Ø 9
OFF PEAK REST OF DAY	VEHICLE	3			
	MINIMUM	8	4 2	4 2	4 2
	MAXIMUM	20	4 2	4 2	4 2
	MAXIMUM2				
	MAXIMUM3				
	PED ACT				
AM PEAK 6-8 AM	VEHICLE	3			
	MINIMUM	8	4 2	4 2	4 2
	MAXIMUM	20	4 2	4 2	4 2
	MAXIMUM2				
	MAXIMUM3				
	PED ACT				
PM PEAK 2-6 PM	VEHICLE	3			
	MINIMUM	8	4 2	4 2	4 2
	MAXIMUM	20	4 2	4 2	4 2
	MAXIMUM2				
	MAXIMUM3				
	PED ACT				
	FACE 1	~~R~~	~~R~~ ~~R~~	~~R~~ ~~R~~	~~R~~ ~~R~~
	FACE 2	R	R R	R R	R R
	FACE 3	~~R~~	~~R~~ ~~R~~	~~R~~ ~~R~~	~~R~~ ~~R~~
	FACE 4	G	Y R	Y R	Y R
	FACE 4A	~~G~~	~~G~~ ~~G~~	~~Y~~ R	~~Y~~ R
	FACE 5	~~R~~	~~R~~ ~~R~~	~~R~~ ~~R~~	~~R~~ ~~R~~
	FACE 6	R	R R	R R	R R
	FACE 8	G	Y R	Y R	Y R
	PED	DW	DW DW	DW DW	DW DW

PHASE 1+5

		R/W	CLEAR TO Ø 2+6	CLEAR TO Ø 9	CLEAR TO Ø 3+8	CLEAR TO Ø 4+8	FLASHING OPERATION
OFF PEAK REST OF DAY	VEHICLE	3					
	MINIMUM	5	4 2	4 2	4 2	4 2	
	MAXIMUM	25	4 2	4 2	4 2	4 2	
	MAXIMUM2						
	MAXIMUM3						
	PED ACT						
AM PEAK 6-8 AM	VEHICLE	3					
	MINIMUM	5	4 2	4 2	4 2	4 2	
	MAXIMUM	25	4 2	4 2	4 2	4 2	
	MAXIMUM2						
	MAXIMUM3						
	PED ACT						
PM PEAK 2-6 PM	VEHICLE	3					
	MINIMUM	5	4 2	4 2	4 2	4 2	
	MAXIMUM	20	4 2	4 2	4 2	4 2	
	MAXIMUM2						
	MAXIMUM3						
	PED ACT						
	FACE 1	~~G~~	~~Y~~ ~~R~~	~~Y~~ ~~R~~	~~Y~~ ~~R~~	~~Y~~ ~~R~~	FR
	FACE 2	R	R R	R R	R R	R R	FY
	FACE 3	~~R~~	~~R~~ ~~R~~	~~R~~ ~~R~~	~~R~~ ~~R~~	~~R~~ ~~R~~	FR
	FACE 4	R	R R	R R	R R	R R	FR
	FACE 4A	~~G~~	~~Y~~ R	~~Y~~ R	~~Y~~ R	~~G~~ ~~G~~	FR
	FACE 5	~~G~~	~~Y~~ ~~R~~	~~Y~~ ~~R~~	~~Y~~ ~~R~~	~~Y~~ ~~R~~	FR
	FACE 6	R	R R	R R	R R	R R	FY
	FACE 8	R	R R	R R	R R	R R	FR
	PED	DW	DW DW	DW DW	DW DW	DW DW	B

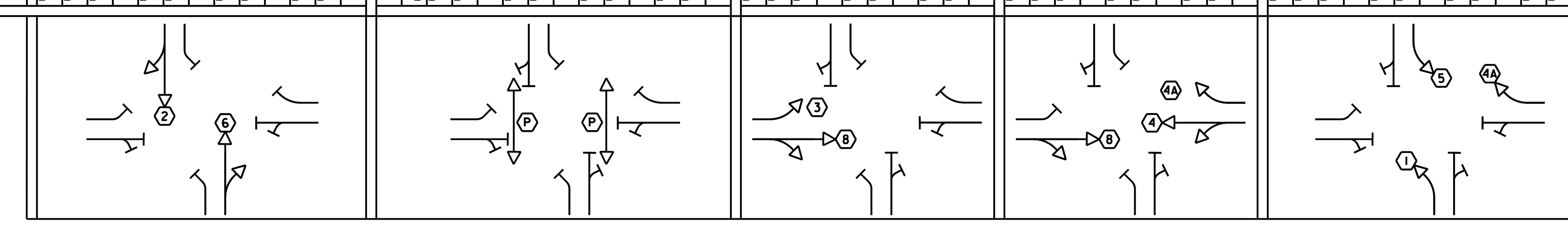

W = WALK, FD = FLASHING DON'T WALK, DW = DON'T WALK, B = BLANK, FR = FLASHING RED, FY = FLASHING YELLOW, SY = STEADY YELLOW

1. FACE NUMBERS ARE BASED ON NEMA PHASES
2. SOUTHBOUND AND NORTHBOUND LEFT-TURNS SHALL OPERATE UNDER PROTECTED PHASING
3. NASON STREET CONNECTOR RIGHT TURNS SHALL OVERLAP US 7 LEFT TURNS DURING PROTECTED PHASE.

CONTROLLER IDENTIFICATION PLAQUE
NOT TO SCALE

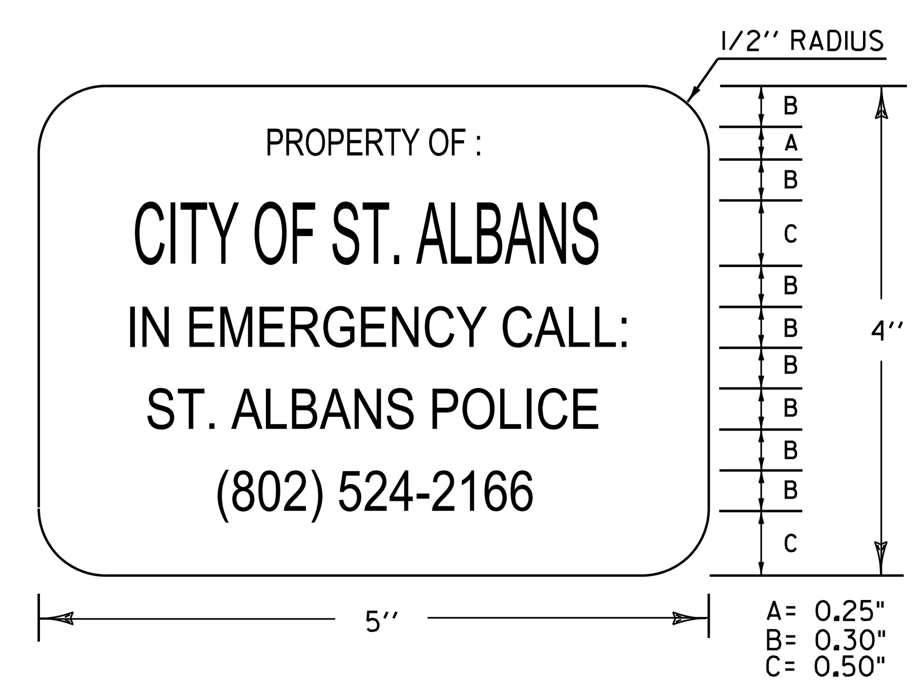

A= 0.25"
B= 0.30"
C= 0.50"

LEGEND: - BLACK (NON-REFL.) - STAMPED PRIOR TO PAINTING
BACKGROUND: NATURAL ALUMINUM OR BRASS SURFACE

NOTES:

1.) THE PLAQUE SHALL BE MOUNTED ON THE TRAFFIC SIGNAL CONTROLLER CABINET. IT SHALL BE FASTENED TO THE CONTROLLER CABINET IN SUCH A MANNER AS TO BE NOT EASILY REMOVED, SUCH AS WELDED, RIVETED OR BOLTED WITH VANDAL PROOF BOLTS.
2.) THE LETTERS SHALL BE PUNCHED OR STAMPED, SUCH STAMPING SHALL PENETRATE AT LEAST 1/2 THE BASE MATERIAL THICKNESS.
3.) THE BASE MATERIAL FOR THE PLAQUE SHALL BE BRASS OR ALUMINUM WITH A MINIMUM THICKNESS OF 0.100 INCHES.

PROGRAM PERIODS OF OPERATION

1 2 3 4 5 6 7 8 9 10 11 12 1 2 3 4 5 6 7 8 9 10 11 12
AM — PM — AM

SUNDAY	1				
MONDAY	1	2	1	3	1
TUESDAY	1	2	1	3	1
WEDNESDAY	1	2	1	3	1
THURSDAY	1	2	1	3	1
FRIDAY	1	2	1	3	1
SATURDAY	1				

NOTES:

PLAN 1 - OFFPEAK (MAXIMUM 1): MIDNIGHT TO 6:00 AM, M-F
8:00 AM TO 2:00 PM, M-F
6:00 PM TO MIDNIGHT, M-F
ALL DAY SATURDAY AND SUNDAY

PLAN 2 - AM PEAK (MAXIMUM 2): 6:00 AM TO 8:00 AM, M-F

PLAN 3 - PM PEAK (MAXIMUM 3): 2:00 PM TO 6:00 PM, M-F

vhb

PROJECT NAME: ST. ALBANS
PROJECT NUMBER: HPP 8000(17)

FILE NAME: 57414_TSPSIA.dgn
PROJECT LEADER: M.A. COLGAN
DESIGNED BY: M. GRAHAM
TRAFFIC SIGNAL SHEET (2 OF 3)
PLOT DATE: 3/4/2016
DRAWN BY: J. ROBERT
CHECKED BY: C. BOBAY
SHEET 113 OF 230

VHB 57414.00

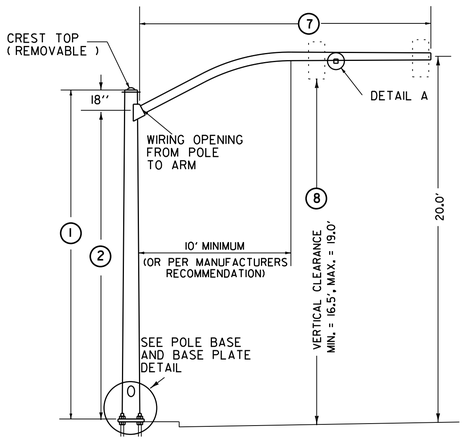

TYPE AI

(SPECIAL CURVED MAST ARM)

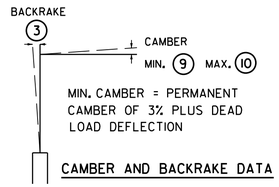

CAMBER AND BACKRAKE DATA

POLE BASE DIAMETER 4

POLE GAUGE 5

POLE TAPER RATE 6

ARM DIAMETER 11

ARM GAUGE 12

ARM TAPER RATE 13

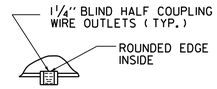

DETAIL A

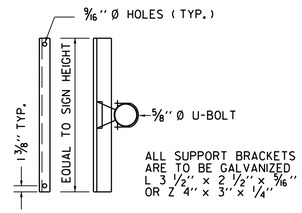

SIGN ON SINGLE
MAST ARM

SIGN BRACKET DETAILS

ANCHOR BOLT DETAIL		
SIZE	L(IN)	T(IN)
1- 1/4" X 48"	42	8
1- 1/2" X 60"	54	9
1- 3/4" X 90"	84	9
2" X 96"	96	9

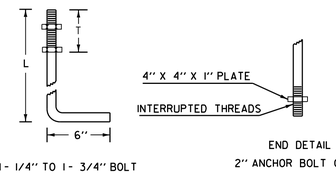

ANCHOR BOLT DETAIL

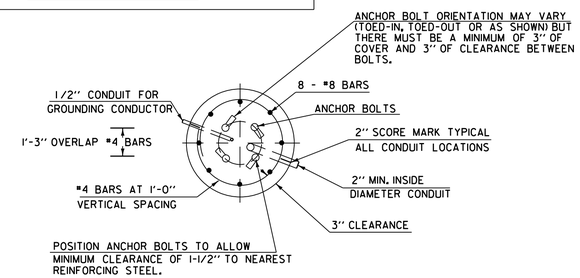

SECTION

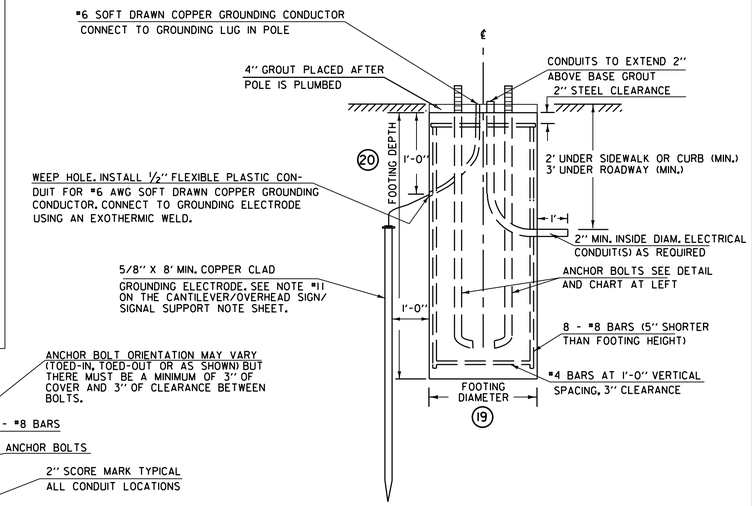

ELEVATION

CANTILEVER FOOTING DETAIL

(SPREAD FOOTINGS OR PILES ARE OPTIONAL)

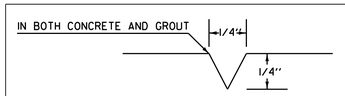

USED FOR CONDUIT LOCATION, SEE SECTION
DETAIL AT LEFT

2" SCORE MARK DETAIL

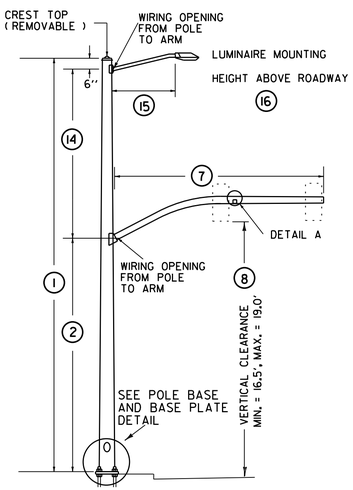

TYPE BI

(SPECIAL CURVED MAST ARM)

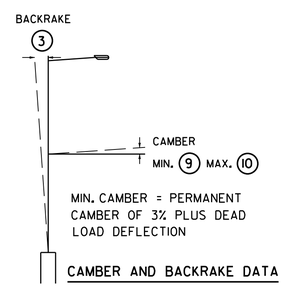

CAMBER AND BACKRAKE DATA

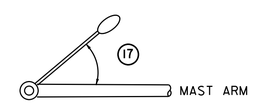

LUMINAIRE ORIENTATION

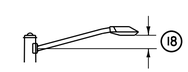

LUMINAIRE ARM RISE

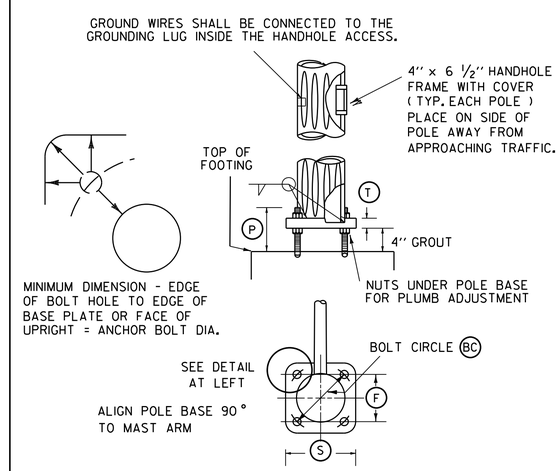

POLE BASE AND BASE PLATE DETAIL

STRUCTURE DIMENSIONS

		POLE DATA						ARM DATA							LIGHTING DATA					FOOTING DATA		BASE PLATE / BOLT DATA					
POLE	TYPE	1	2	3	4	5	6	7	8	9	10	11	12	13	14	15	16	17	18	19	20	BC	F	S	T	P	ANCHOR BOLT SIZE
MAP-1	BI	33	16					55	18						12.5	8		45	2								
MAP-2	AI	21.5	16					45	18																		
MAP-3	BI	33	16					45	18						12.5	8		45	2								
MAP-4	AI	21.5	16					55	18																		

NOTE:
DETAILS
NTS

SINGLE MAST ARM CANTILEVER / FOOTING DETAIL SHEET

PREPARED BY JAR DATE $$$DATE$$$
CHECKED BY CMB DATE $$$DATE$$$
DESIGN SUPERVISOR _____ DATE _____
PROJ. ST. ALBANS
HPP 8000(17 101/100)
TRAFFIC SIGNAL SHEET NO. 3
SHEET 114 OF 230 SHEETS

VHB 57414.00

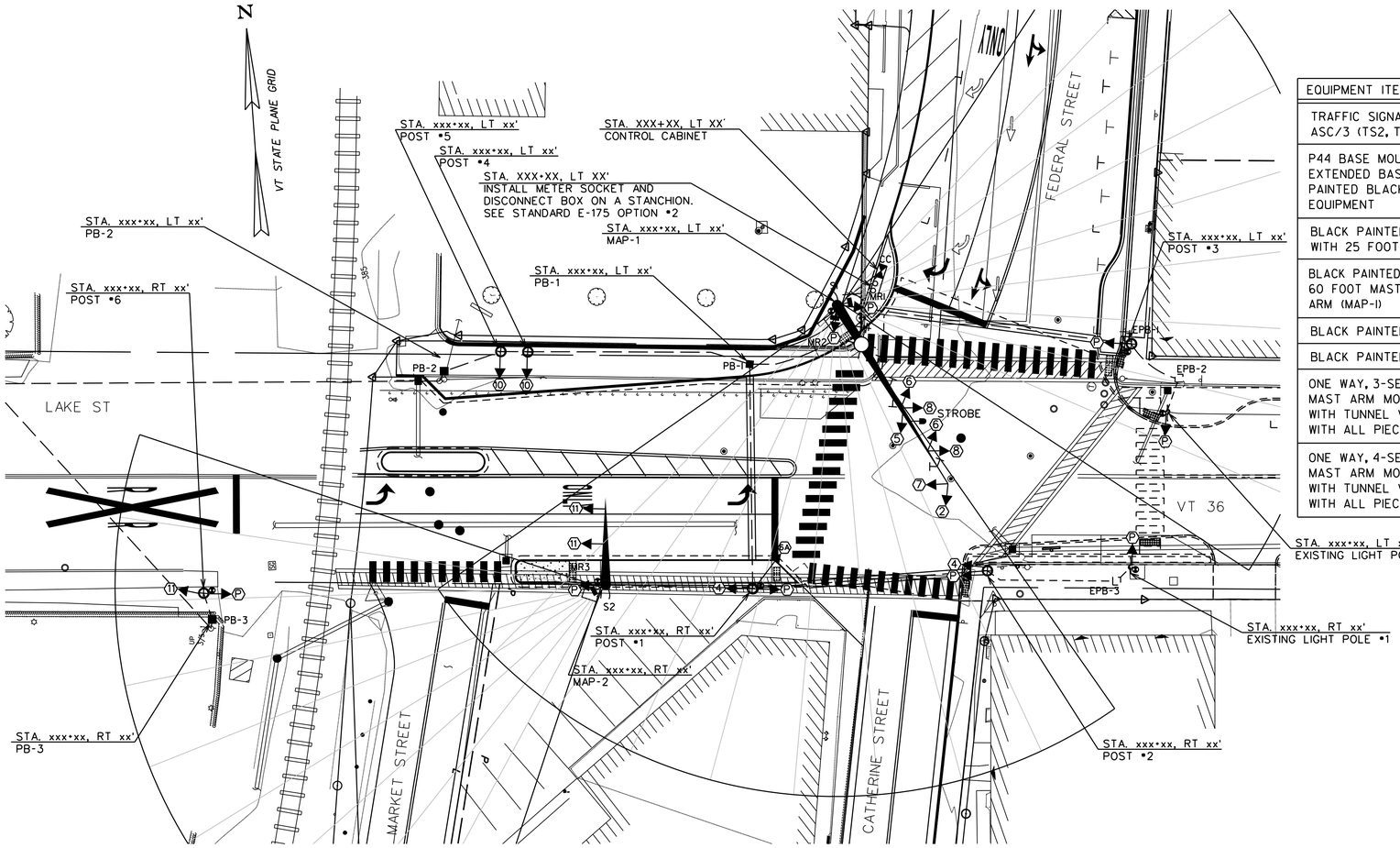

LIST OF MAJOR EQUIPMENT
LAKE ST AND FEDERAL / CATHERINE ST INTERSECTION

EQUIPMENT ITEM 678.15	QUANTITY
TRAFFIC SIGNAL CONTROLLER ECONOLITE MODEL ASC/3 (TS2, TYPE 2) OR APPROVED EQUAL	1
P44 BASE MOUNTED CONTROLLER CABINET WITH EXTENDED BASE ON A CONCRETE FOUNDATION PAINTED BLACK WITH ANCILLARY CONTROL EQUIPMENT	1
BLACK PAINTED STEEL MAST ARM SIGNAL POLE WITH 25 FOOT MAST ARM (MAP-2)	1
BLACK PAINTED STEEL MAST ARM SIGNAL POLE WITH 60 FOOT MAST ARM AND 8 FOOT LIGHTING BRACKET ARM (MAP-1)	1
BLACK PAINTED PEDESTAL POST (8-FOOT)	1
BLACK PAINTED PEDESTAL POST (10-FOOT)	5
ONE WAY, 3-SECTION, 12-INCH POLYCARBONATE MAST ARM MOUNTED LED TRAFFIC SIGNAL HEAD WITH TUNNEL VISORS AND LOUVERED BACKPLATES WITH ALL PIECES PAINTED BLACK	13
ONE WAY, 4-SECTION, 12-INCH POLYCARBONATE MAST ARM MOUNTED LED TRAFFIC SIGNAL HEAD WITH TUNNEL VISORS AND LOUVERED BACKPLATES WITH ALL PIECES PAINTED BLACK	2

EQUIPMENT ITEM 678.15	QUANTITY
BRACKET MOUNTED 16-INCH LED COUNTDOWN PEDESTRIAN SIGNAL HEADS PAINTED BLACK	4
PEDESTAL MOUNTED 16-INCH LED COUNTDOWN PEDESTRIAN SIGNAL HEADS PAINTED BLACK	6
VTRANS SPEC ACCESSIBLE PEDESTRIAN PUSHBUTTONS WITH R10-3e TYPE SIGN ASSEMBLY	8
ASTRO-BRACKETS OR EQUAL	7
BRACKET SIGNAL MOUNTINGS	4
MATRIX RADAR SENSORS WITH SENSOR CABLES OR EQUAL	3
METER SOCKET DISCONNECT WITH BYPASS ON PEDESTAL	1
RAILROAD PREEMPTION SYSTEM	1
WIRELESS RADIO INTERCONNECT SYSTEM	1
RAILROAD PREEMPTION STROBE	1
RAILROAD PREEMPTION CONNECTION	1
GPS UNIT	1

RADAR STOP BAR DETECTOR SCHEDULE

ITEM 678.15

DETECTORS					SETTINGS	
PLAN ID	STREET	DIRECTION	LANE	CALL Ø	TYPE	DETECTOR NUMBER
MR1	FEDERAL ST	SOUTHBOUND	ALL APPROACHES	6	RADAR	1
MR1	LAKE ST	WESTBOUND	ALL APPROACHES	8	RADAR	1
MR2	CATHERINE ST	NORTHBOUND	ALL APPROACHES	2	RADAR	2
MR2	LAKE ST	EASTBOUND	ALL APPROACHES	4/7	RADAR	2
MR3	MARKET ST	NORTHBOUND	ALL APPROACHES	10	RADAR	3
MR3	LAKE ST	WESTBOUND	ALL APPROACHES	11	RADAR	3

ELECTRICAL CONDUIT SCHEDULE

ITEM 678.21

I.D.	STATION	TYPE
S1		SPARE SWEEP AT MAP-1
S2		SPARE SWEEP AT MAP-2

WIRED CONDUIT (PVC) AND ELECTRICAL CONDUIT SLEEVE SCHEDULE

ITEM NUMBER	678.21	678.23		678.30	678.15	
FROM/TO	ELECTRICAL CONDUIT SPARE 2"	WIRED CONDUIT 2"	WIRED CONDUIT 3"	CONDUIT SLEEVE 8"	SIGNAL WIRE	DESCRIPTION
POWER TO STANCHION	5	10				POWER (INCLUDES RISER)
STANCHION TO CABINET	10	5				POWER
CABINET TO PB-1	50		100			POST #1, MAP-2, POST #2, EPB-3, ELP-1, POST #4, POST #5, PB-2, PB-3, POST #6 (3 RUNS)
PB-1 TO POST #1	65		130	55		POST #1, POST #2, EPB-3, ELP-1, MAP-2 (3 RUNS)
POST #1 TO POST #2	70	70		50		POST #2,EPB-3, ELP-1(2 RUNS)
POST #2 TO EPB-3					40	EPB-3, ELP-1(EXISTING)
EPB-3 TO ELP-1					10	ELP-1(EXISTING)
POST #1 TO MAP-2	45	90				MAP-2 (3 RUNS)
PB-1 TO POST #4	65	65				POST #4, POST #5, PB-2, PB-3, POST #6 (2 RUNS)
POST #4 TO POST #5	10	10				POST #5, PB-2, PB-3, POST #6(2 RUNS)
POST #5 TO PB-2	20	20				PB-2, PB-3, POST #6 (2 RUNS)
PB-2 TO PB-3					325	PB-3, POST #6 (2 RUNS)
PB-3 TO POST #6	10	10				POST #6 (2 RUNS)
CABINET TO MAP-1	20		30			MAP-1, POST #3, EPB-2, ELP-2 (3 RUNS)
MAP-1 TO POST #3	85	85		60		POST #3, EPB-2, ELP-2 (2 RUNS)
POST #3 TO EPB-2					20	EPB-2, ELP-2 (EXISTING)
EPB-2 TO ELP-2					10	ELP-2 (EXISTING)
SUB-TOTALS	450	365	260	170	405	
ROUNDING	5	5	5	5	5	
TOTALS	455	370	265	175	410	

2016 DHV WEEKDAY TRAFFIC DATA

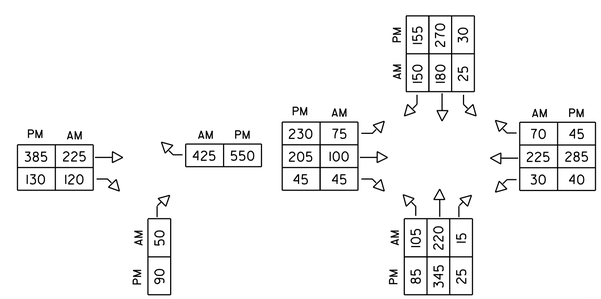

SIGNAL FACE ARRANGEMENT

(12" LED LENSES W/ 5" BACKPLATES) (16" LED)

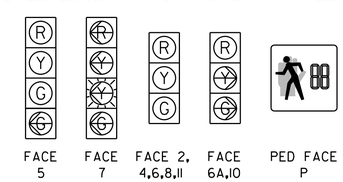

LEGEND

NEW	LEGEND
CC	CONTROLLER CABINET
	SIGNAL HEAD
	CONDUIT
	PEDESTAL POST
	STANCHION
	MAST ARM
	PEDESTRIAN PUSH BUTTON
PB	PULL BOX
	OVERHEAD SIGN
	LUMINAIRE
MR	MATRIX RADAR SENSOR
	MATRIX RADAR DETECTION ZONE
	WIRELESS ANTENNA

EQUIPMENT NOTES

(A) SEE STANDARDS E-170, 171A, 171B, 171C, 173, & 175 FOR ADDITIONAL INFORMATION.

(B) SEE TRAFFIC SIGNAL NOTE SHEETS 110,111,AND 116 AND SINGLE MAST ARM CANTILEVER/FOOTING DETAIL SHEET 117 FOR ADDITIONAL INFORMATION.

(C) FOR SIGN DETAILS, SEE SHEETS 94-109.

0 20 40
SCALE IN FEET

vhb

PROJECT NAME: ST. ALBANS
PROJECT NUMBER: HPP 8000(17 101/100

FILE NAME: 57414_TSPS2.dgn
PROJECT LEADER: M.A. COLGAN
DESIGNED BY: M. GRAHAM
TRAFFIC SIGNAL SHEET (1 OF 3)

PLOT DATE: 3/4/2016
DRAWN BY: J. ROBERT
CHECKED BY: C. BOBAY
SHEET 115 OF 230

TRAFFIC SIGNAL NOTES

A. NEW EQUIPMENT

1. ALL SIGNAL HEADS MOUNTED ON CANTILEVER ARMS SHALL BE POLYCARBONATE. BACKPLATES SHALL BE REQUIRED ON ALL SIGNAL HEADS.

2. THE TRAFFIC SIGNAL CONTROLLER AND ANCILLARY EQUIPMENT SHALL BE MANUFACTURED BY ECONOLITE CONTROL PRODUCTS, INC. OR NAZTEC, INC. OR APPROVED EQUIVALENT. TRAFFIC SIGNAL CONTROLLER SHALL BE NEMA TS2, TYPE 2, PROVIDED IN A NEMA "P" TYPE GROUND MOUNTED CABINET WITH BASE EXTENSION INSTALLED AS SHOWN ON THE TRAFFIC SIGNAL PLAN.

3. A DISCONNECT BREAKER FOR EACH CIRCUIT SHALL BE INSTALLED IN A RAINPROOF (NEMA 3R), LOCKED CABINET ON A STANCHION NEXT TO OR BELOW THE METER SOCKET. RECOMMEND OPTION #2 ON STD E-175.

4. ALL SIGNAL HEADS SHALL BE 12-INCH LIGHT EMITTING DIODES (LED).

5. LUMINAIRE ON MAST ARM SHALL BE AN L.E.D. FIXTURE.

6. ALL SIGNAL EQUIPMENT SHALL BE PAINTED FLAT BLACK INCLUDING MAST ARM POLES, MAST ARMS, AND LUMINAIRE BRACKET ARMS.

7. A WIRELESS INTERCONNECT SYSTEM SHALL BE INSTALLED AND OPERATIONAL BETWEEN THE LAKE/FEDERAL/CATHERINE INTERSECTION AND THE LAKE/MAIN/FAIRFIELD INTERSECTION.

8. RAILROAD PREEMPTION EQUIPMENT INCLUDING CABLING AND STROBE SHALL BE PROVIDED. COORDINATION WITH THE RAILROAD TO RECEIVE THE PREEMPTION SIGNAL FROM THE RAILROAD CONTROL CABINET SHALL BE REQUIRED.

B. SIGNAL OPERATION

1. UPON STARTUP THE SIGNAL TIMINGS SHOWN ON THE PLANS MAY REQUIRE FINE-TUNING IN THE FIELD BASED ON TRAFFIC OBSERVATION.

2. THE TRAFFIC SIGNALS SHALL NOT BE OPERATED BEFORE PAVEMENT MARKINGS AND SIGNAL RELATED SIGNING IS IN PLACE.

3. ALL SIGNALS SHALL DWELL ON THE VT 36 THRU MOVEMENT PHASES (4+8).

4. VT 36 THRU PHASES 4+8 SHALL BE USED FOR THE START-UP PHASE FOLLOWING FLASHING OPERATION.

5. THE EASTBOUND LEFT TURN SHALL OPERATE WITH PROTECTED-PERMISSIVE FLASHING YELLOW ARROW PHASING.

6. FLASHING YELLOW ARROW SHALL NOT BE DISPLAYED WHEN OPERATING IN PROTECTED ONLY MODE.

7. THE SOUTHBOUND RIGHT TURN SHALL OPERATE AS AN OVERLAP TO PHASE 7

C. TRAFFIC SIGNAL CONDUIT

1. ALL TRAFFIC SIGNAL CONDUIT SHALL BE PVC, SCHEDULE 80

2. MINIMUM CONDUIT SIZES SHALL BE 2-INCH FOR ALL APPLICATIONS

3. WHEN NEW CONDUIT IS PLACED BELOW THE ROADWAY OR ACROSS SIDE ROADS, IT SHALL BE PLACED IN AN PVC ELECTRICAL CONDUIT SLEEVE, SIZE AS SHOWN ON THE PLANS (8" MINIMUM OR MATCHING EXISTING SLEEVE SIZE).

4. EXISTING PULL BOXES 1-4 WERE INSTALLED UNDER CITY OF SAINT ALBANS PROPOSED IMPROVEMENT PROJECT. EXISTING PULL BOXES 1 AND 4 SHALL BE REMOVED AND REPLACED WITH A PEDESTAL POST.

5. WHERE PLANS INDICATE 2 CONDUIT RUNS, 1 SHALL BE FOR THE SIGNAL CABLE AND 1 SHALL BE A SPARE CONDUIT. WHERE PLANS INDICATE 3 CONDUIT RUNS, 1 SHALL BE FOR THE SIGNAL CABLE, 1 SHALL BE FOR THE RADAR DETECTION, AND 1 SHALL BE A SPARE CONDUIT.

6. CONDUIT RUNS TO REACH POST 6 SHALL CONSIST OF A CONDUIT TO REACH UTILITY POLES WITH AERIAL SIGNAL WIRE TO CROSS ABOVE THE RAILROAD TRACKS. RAILROAD PREEMPTION CABLING SHALL FOLLOW THE SAME PATH.

D. VEHICLE DETECTION

1. WAVETRONIX MATRIX RADAR SENSORS SHALL BE INSTALLED ON THE SIGNAL POLE UP RIGHT BELOW THE MAST ARM AND AIMED TO PICK UP VEHICLE DETECTION.

2. ANY CABLE FOR THE RADAR STOP BAR DETECTION SHALL BE INCIDENTAL TO ITEM 678.15.

3. ALL DETECTORS SHALL FAIL IN THE "ON" MODE.

E. GENERAL

1. THE CONTRACTOR SHALL ACQUIRE ALL NECESSARY PERMITS AND MAKE ALL NECESSARY ARRANGEMENTS WITH THE UTILITY COMPANY TO MAINTAIN THE EXISTING POWER SUPPLY TO THE SIGNAL EQUIPMENT.

2. SEE SUPPLEMENTAL SPECIFICATIONS FOR SECTIONS 678, 679, 752 & 753 FOR ADDITIONAL INFORMATION.

3. SEE THE CONTROLLER ID PLAQUE DETAIL ON THIS SHEET.

TIMING AND PHASING

PHASE 2+5+10

		R/W	CLEAR TO Ø 2+6	CLEAR TO Ø 9	CLEAR TO Ø 4+8	CLEAR TO Ø 4+7
OFF PEAK REST OF DAY	VEHICLE	3				
	MINIMUM	5	4 2	4 2	4 2	4 2
	MAXIMUM	10	4 2	4 2	4 2	4 2
	MAXIMUM2					
	MAXIMUM3					
	PED ACT					
AM PEAK 6-8 AM	VEHICLE	3				
	MINIMUM	5	4 2	4 2	4 2	4 2
	MAXIMUM	10	4 2	4 2	4 2	4 2
	MAXIMUM2					
	MAXIMUM3					
	PED ACT					
PM PEAK 2-6 PM	VEHICLE	3				
	MINIMUM	5	4 2	4 2	4 2	4 2
	MAXIMUM	10	4 2	4 2	4 2	4 2
	MAXIMUM2					
	MAXIMUM3					
	PED ACT					
	FACE 2	G	G G	Y R	Y R	Y R
	FACE 4	R	R R	R R	R R	R R
	FACE 5	~~G~~ G	Y R	Y R	Y R	Y R
	FACE 6	R	R R	R R	R R	R R
	FACE 6A	R	R R	R R	R R	R R
	FACE 7	~~R~~	~~R R~~	~~R R~~	~~R R~~	~~R R~~
	FACE 8	R	R R	R R	R R	R R
	FACE 10	~~G~~	~~Y~~ R	~~Y~~ R	~~Y~~ R	~~Y~~ R
	FACE 11	R	R R	R R	R R	R R
	PED	DW	DW DW	DW DW	DW DW	DW DW

PHASE 2+6+10

		R/W	CLEAR TO Ø 9	CLEAR TO Ø 4+8	CLEAR TO Ø 4+7	CLEAR TO Ø 2+5
OFF PEAK REST OF DAY	VEHICLE	3				
	MINIMUM	5	4 2	4 2	4 2	4 2
	MAXIMUM	10	4 2	4 2	4 2	4 2
	MAXIMUM2					
	MAXIMUM3					
	PED ACT					
AM PEAK 6-8 AM	VEHICLE	3				
	MINIMUM	5	4 2	4 2	4 2	4 2
	MAXIMUM	35	4 2	4 2	4 2	4 2
	MAXIMUM2					
	MAXIMUM3					
	PED ACT					
PM PEAK 2-6 PM	VEHICLE	3				
	MINIMUM	5	4 2	4 2	4 2	4 2
	MAXIMUM	40	4 2	4 2	4 2	4 2
	MAXIMUM2					
	MAXIMUM3					
	PED ACT					
	FACE 2	G	Y R	Y R	Y R	Y R
	FACE 4	R	R R	R R	R R	R R
	FACE 5	R	R R	R R	R R	R R
	FACE 6	G	Y R	Y R	Y R	Y R
	FACE 6A	R	R R	R R	R R	R R
	FACE 7	~~R~~	~~R R~~	~~R R~~	~~R R~~	~~R R~~
	FACE 8	R	R R	R R	R R	R R
	FACE 10	~~G~~	~~Y~~ R	~~Y~~ R	~~Y~~ R	~~Y~~ R
	FACE 11	R	R R	R R	R R	R R
	PED	DW	DW DW	DW DW	DW DW	DW DW

PHASE 9

		R/W	CLEAR TO Ø 4+8	CLEAR TO Ø 4+7	CLEAR TO Ø 2+5	CLEAR TO Ø 2+6
OFF PEAK REST OF DAY	VEHICLE					
	MINIMUM					
	MAXIMUM					
	MAXIMUM2					
	MAXIMUM3					
	PED ACT	4 17	3 1	3 1	3 1	3 1
AM PEAK 6-8 AM	VEHICLE					
	MINIMUM					
	MAXIMUM					
	MAXIMUM2					
	MAXIMUM3					
	PED ACT	4 17	3 1	3 1	3 1	3 1
PM PEAK 2-6 PM	VEHICLE					
	MINIMUM					
	MAXIMUM					
	MAXIMUM2					
	MAXIMUM3					
	PED ACT	4 17	3 1	3 1	3 1	3 1
	FACE 2	R R	R R	R R	R R	R R
	FACE 4	R R	R R	R R	R R	R R
	FACE 5	R R	R R	R R	R R	R R
	FACE 6	R R	R R	R R	R R	R R
	FACE 6A	R R	R R	R R	R R	R R
	FACE 7	~~R R~~	~~R R~~	~~R R~~	~~R R~~	~~R R~~
	FACE 8	R R	R R	R R	R R	R R
	FACE 10	R R	R R	R R	R R	R R
	FACE 11	R R	R R	R R	R R	R R
	PED	W FD	DW DW	DW DW	DW DW	DW DW

PHASE 4+8 (DWELL)

		R/W	CLEAR TO Ø 4+7	CLEAR TO Ø 2+5	CLEAR TO Ø 2+6	CLEAR TO Ø 9
OFF PEAK REST OF DAY	VEHICLE	3				
	MINIMUM	5	4 2	4 2	4 2	4 2
	MAXIMUM	10	4 2	4 2	4 2	4 2
	MAXIMUM2					
	MAXIMUM3					
	PED ACT					
AM PEAK 6-8 AM	VEHICLE	3				
	MINIMUM	5	4 2	4 2	4 2	4 2
	MAXIMUM	25	4 2	4 2	4 2	4 2
	MAXIMUM2					
	MAXIMUM3					
	PED ACT					
PM PEAK 2-6 PM	VEHICLE	3				
	MINIMUM	5	4 2	4 2	4 2	4 2
	MAXIMUM	20	4 2	4 2	4 2	4 2
	MAXIMUM2					
	MAXIMUM3					
	PED ACT					
	FACE 2	R	R R	R R	R R	R R
	FACE 4	G	G G	G G	G G	G G
	FACE 5	R	R R	R R	R R	R R
	FACE 6	R	R R	R R	R R	R R
	FACE 6A	R	R R	R R	R R	R R
	FACE 7	FY	FY FY	~~Y R~~	~~Y R~~	~~Y R~~
	FACE 8	G	Y R	Y R	Y R	Y R
	FACE 10	R	R R	R R	R R	R R
	FACE 11	G	Y R	Y R	Y R	Y R
	PED	DW	DW DW	DW DW	DW DW	DW DW

PHASE 4+7

		R/W	CLEAR TO Ø 2+5	CLEAR TO Ø 2+6	CLEAR TO Ø 9	CLEAR TO Ø 4+8
OFF PEAK REST OF DAY	VEHICLE	3				
	MINIMUM	5	4 2	4 2	4 2	4 2
	MAXIMUM	10	4 2	4 2	4 2	4 2
	MAXIMUM2					
	MAXIMUM3					
	PED ACT					
AM PEAK 6-8 AM	VEHICLE	3				
	MINIMUM	5	4 2	4 2	4 2	4 2
	MAXIMUM	15	4 2	4 2	4 2	4 2
	MAXIMUM2					
	MAXIMUM3					
	PED ACT					
PM PEAK 2-6 PM	VEHICLE	3				
	MINIMUM	5	4 2	4 2	4 2	4 2
	MAXIMUM	20	4 2	4 2	4 2	4 2
	MAXIMUM2					
	MAXIMUM3					
	PED ACT					
	FACE 2	R	R R	R R	R R	R R
	FACE 4	G	Y R	Y R	Y R	G G
	FACE 5	R	R R	R R	R R	R R
	FACE 6	R	R R	R R	R R	R R
	FACE 6A	R	R R	R R	R R	R R
	FACE 7	~~G~~	~~Y R~~	~~Y R~~	~~Y R~~	~~Y R~~
	FACE 8	R	R R	R R	R R	R R
	FACE 10	R	R R	R R	R R	R R
	FACE 11	R	R R	R R	R R	R R
	PED	DW	DW DW	DW DW	DW DW	DW DW

FLASHING OPERATION

FACE 2	FR
FACE 4	FR
FACE 5	FR
FACE 6	FR
FACE 6A	FR
FACE 7	FR
FACE 8	FR
FACE 10	FR
FACE 11	FR
PED	B

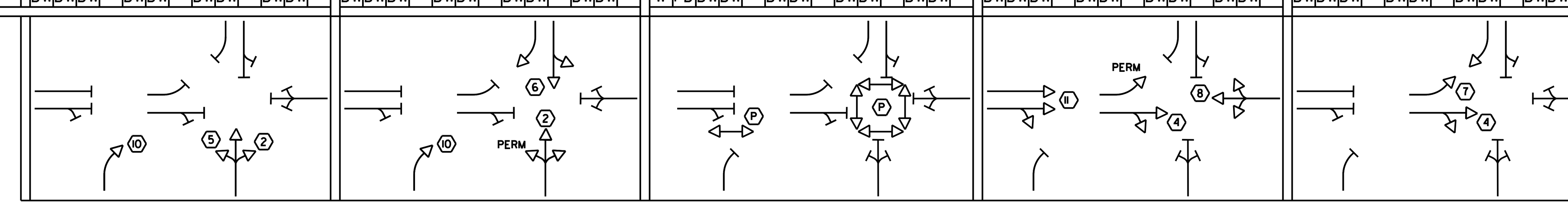

W = WALK, FD = FLASHING DON'T WALK, DW = DON'T WALK, B = BLANK, FR = FLASHING RED, FY = FLASHING YELLOW, SY = STEADY YELLOW

W = WALK, FD = FLASHING DON'T WALK, DW = DON'T WALK, B = BLANK, FR = FLASHING RED, FY = FLASHING YELLOW, SY = STEADY YELLOW

1. FACE NUMBERS ARE BASED ON NEMA PHASES
2. EASTBOUND LEFT-TURNS SHALL OPERATE UNDER PROTECTED/PERMISSIVE LEFT-TURN PHASING, USING THE 4-SECTION FLASHING YELLOW ARROW.
3. FEDERAL STREET SOUTHBOUND RIGHT TURNS SHALL OVERLAP VT 36 LEFT TURNS DURING PROTECTED PHASE.

CONTROLLER IDENTIFICATION PLAQUE

NOT TO SCALE

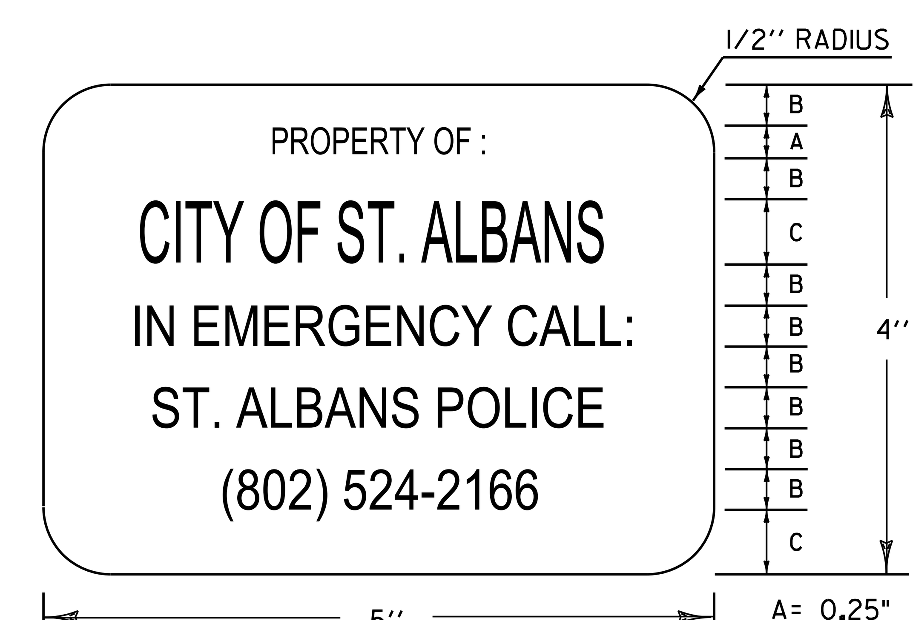

A= 0.25"
B= 0.30"
C= 0.50"

LEGEND: - BLACK (NON-REFL.) - STAMPED PRIOR TO PAINTING
BACKGROUND: NATURAL ALUMINUM OR BRASS SURFACE

NOTES:

1.) THE PLAQUE SHALL BE MOUNTED ON THE TRAFFIC SIGNAL CONTROLLER CABINET. IT SHALL BE FASTENED TO THE CONTROLLER CABINET IN SUCH A MANNER AS TO BE NOT EASILY REMOVED, SUCH AS WELDED, RIVETED OR BOLTED WITH VANDAL PROOF BOLTS.
2.) THE LETTERS SHALL BE PUNCHED OR STAMPED, SUCH STAMPING SHALL PENETRATE AT LEAST 1/2 THE BASE MATERIAL THICKNESS.
3.) THE BASE MATERIAL FOR THE PLAQUE SHALL BE BRASS OR ALUMINUM WITH A MINIMUM THICKNESS OF 0.100 INCHES.

PROGRAM PERIODS OF OPERATION

1 2 3 4 5 6 7 8 9 10 11 12 1 2 3 4 5 6 7 8 9 10 11 12
AM — PM — AM

SUNDAY	1				
MONDAY	1	2	1	3	1
TUESDAY	1	2	1	3	1
WEDNESDAY	1	2	1	3	1
THURSDAY	1	2	1	3	1
FRIDAY	1	2	1	3	1
SATURDAY	1				

NOTES:

PLAN 1 - OFFPEAK (MAXIMUM 1): MIDNIGHT TO 6:00 AM, M-F; 8:00 AM TO 2:00 PM, M-F; 6:00 PM TO MIDNIGHT, M-F; ALL DAY SATURDAY AND SUNDAY

PLAN 2 - AM PEAK (MAXIMUM 2): 6:00 AM TO 8:00 AM, M-F

PLAN 3 - PM PEAK (MAXIMUM 3): 2:00 PM TO 6:00 PM, M-F

PROJECT NAME:	ST. ALBANS
PROJECT NUMBER:	HPP 8000(17)
FILE NAME: 57414_TSPS2A.dgn	PLOT DATE: 3/4/2016
PROJECT LEADER: M.A. COLGAN	DRAWN BY: J. ROBERT
DESIGNED BY: M. GRAHAM	CHECKED BY: C. BOBAY
TRAFFIC SIGNAL SHEET (2 OF 3)	SHEET 116 OF 230

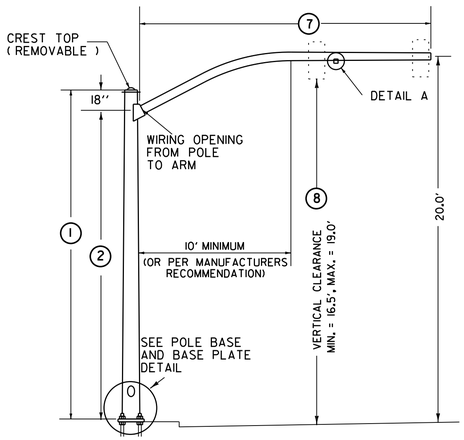

TYPE AI

(SPECIAL CURVED MAST ARM)

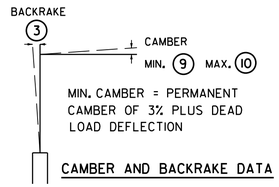

MIN. CAMBER = PERMANENT
CAMBER OF 3% PLUS DEAD
LOAD DEFLECTION

CAMBER AND BACKRAKE DATA

POLE BASE DIAMETER 4

POLE GAUGE 5

POLE TAPER RATE 6

ARM DIAMETER 11

ARM GAUGE 12

ARM TAPER RATE 13

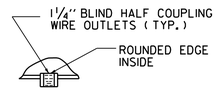

DETAIL A

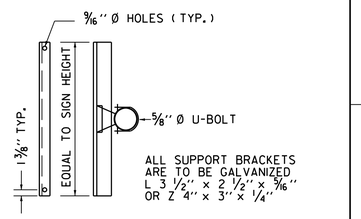

ALL SUPPORT BRACKETS
ARE TO BE GALVANIZED
L 3 1/2" x 2 1/2" x 5/16"
OR Z 4" x 3" x 1/4"

SIGN ON SINGLE
MAST ARM

SIGN BRACKET DETAILS

ANCHOR BOLT DETAIL		
SIZE	L(IN)	T(IN)
1- 1/4" X 48"	42	8
1- 1/2" X 60"	54	9
1- 3/4" X 90"	84	9
2" X 96"	96	9

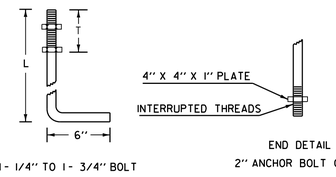

ANCHOR BOLT DETAIL

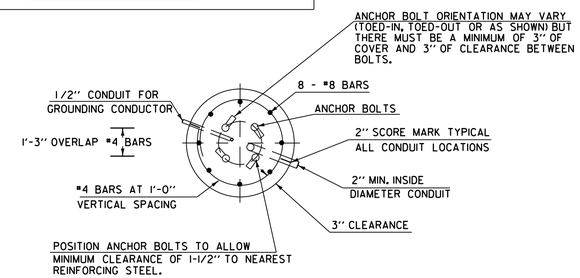

SECTION

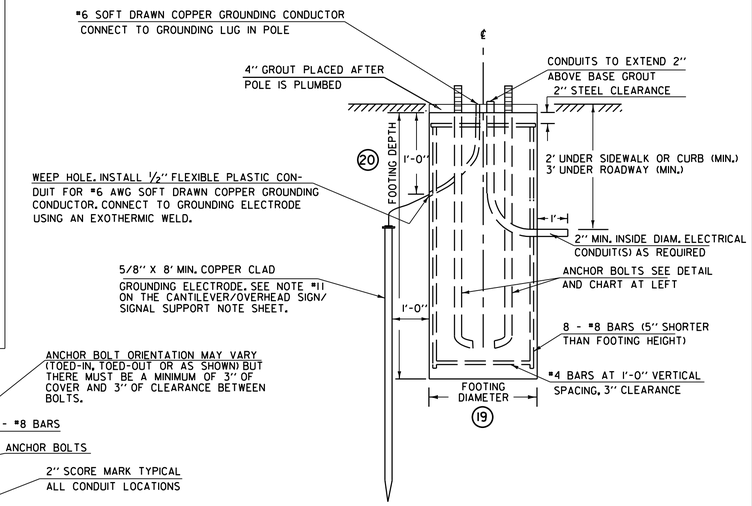

ELEVATION

CANTILEVER FOOTING DETAIL

(SPREAD FOOTINGS OR PILES ARE OPTIONAL)

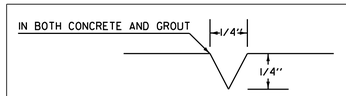

USED FOR CONDUIT LOCATION, SEE SECTION
DETAIL AT LEFT

2" SCORE MARK DETAIL

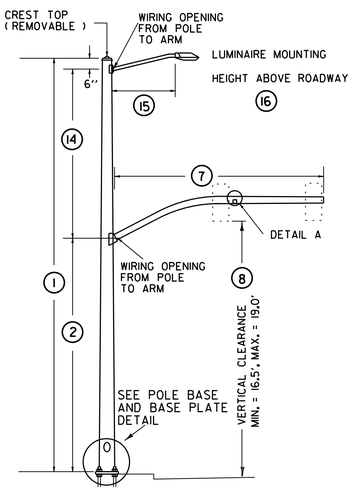

TYPE BI

(SPECIAL CURVED MAST ARM)

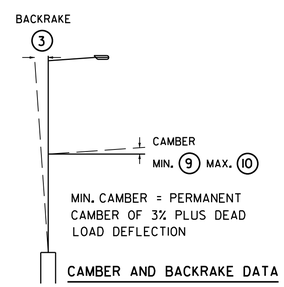

MIN. CAMBER = PERMANENT
CAMBER OF 3% PLUS DEAD
LOAD DEFLECTION

CAMBER AND BACKRAKE DATA

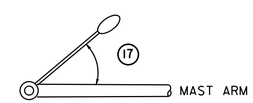

LUMINAIRE ORIENTATION

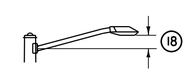

LUMINAIRE ARM RISE

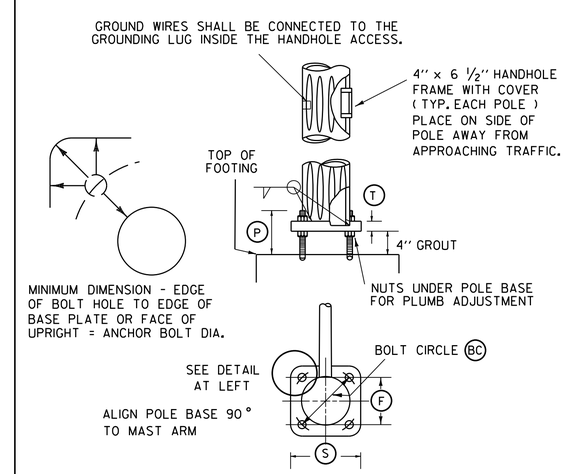

POLE BASE AND BASE PLATE DETAIL

STRUCTURE DIMENSIONS

		POLE DATA						ARM DATA							LIGHTING DATA					FOOTING DATA		BASE PLATE / BOLT DATA					
POLE	TYPE	1	2	3	4	5	6	7	8	9	10	11	12	13	14	15	16	17	18	19	20	BC	F	S	T	P	ANCHOR BOLT SIZE
MAP-1	BI	33	16					60	18						12.5	8		45	2								
MAP-2	AI	21.5	16					25	18																		

NOTE:
DETAILS
NTS

SINGLE MAST ARM CANTILEVER / FOOTING DETAIL SHEET

PREPARED BY JAR DATE $$$DATE$$$
CHECKED BY CMB DATE $$$DATE$$$
DESIGN SUPERVISOR _____ DATE _____
PROJ. ST. ALBANS
HPP 8000(17 101/100
TRAFFIC SIGNAL SHEET NO. 3
SHEET 117 OF 230 SHEETS

VHB 57414.00

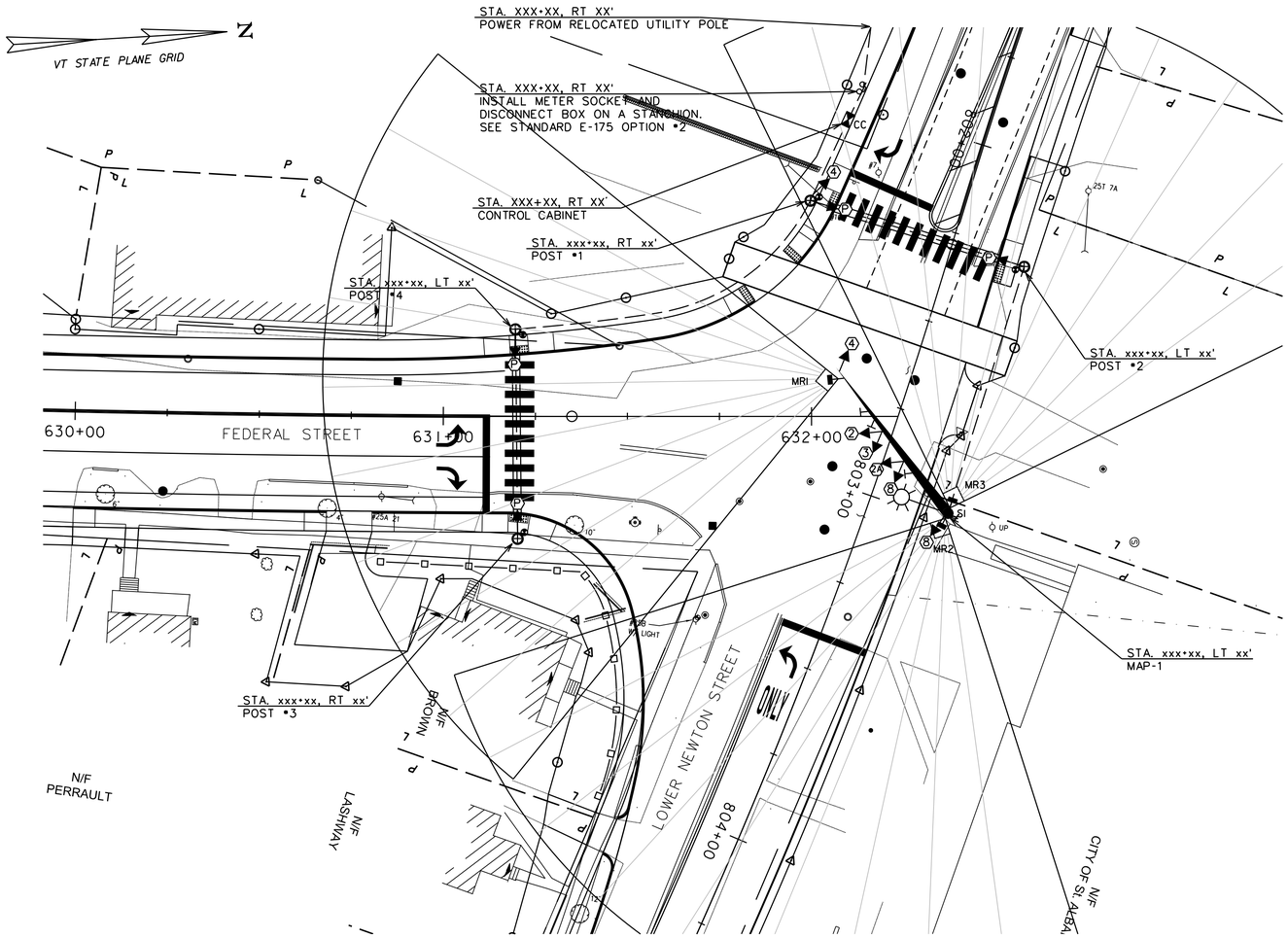

LIST OF MAJOR EQUIPMENT
LOWER NEWTON ST AND FEDERAL ST INTERSECTION

EQUIPMENT ITEM 678.15	QUANTITY
TRAFFIC SIGNAL CONTROLLER ECONOLITE MODEL ASC/3 (TS2, TYPE 2) OR APPROVED EQUAL	1
P44 BASE MOUNTED CONTROLLER CABINET WITH EXTENDED BASE ON A CONCRETE FOUNDATION PAINTED BLACK WITH ANCILLARY CONTROL EQUIPMENT	1
BLACK PAINTED STEEL MAST ARM SIGNAL POLE WITH 50 FOOT MAST ARM AND 8 FOOT LIGHTING BRACKET ARM (MAP-1)	1
BLACK PAINTED PEDESTAL POST (8-FOOT)	3
BLACK PAINTED PEDESTAL POST (10-FOOT)	1
ONE WAY, 3-SECTION, 12-INCH POLYCARBONATE MAST ARM MOUNTED LED TRAFFIC SIGNAL HEAD WITH TUNNEL VISORS AND LOUVERED BACKPLATES WITH ALL PIECES PAINTED BLACK	5
ONE WAY, 5-SECTION, 12-INCH POLYCARBONATE MAST ARM MOUNTED LED TRAFFIC SIGNAL HEAD WITH TUNNEL VISORS AND LOUVERED BACKPLATES WITH ALL PIECES PAINTED BLACK	1

EQUIPMENT ITEM 678.15	QUANTITY
ONE WAY, 4-SECTION, 12-INCH POLYCARBONATE MAST ARM MOUNTED LED TRAFFIC SIGNAL HEAD WITH TUNNEL VISORS AND LOUVERED BACKPLATES WITH ALL PIECES PAINTED BLACK	1
PEDESTAL MOUNTED 16-INCH LED COUNTDOWN PEDESTRIAN SIGNAL HEADS PAINTED BLACK	4
VTRANS SPEC ACCESSIBLE PEDESTRIAN PUSHBUTTONS WITH R10-3e TYPE SIGN ASSEMBLY	4
ASTRO-BRACKETS OR EQUAL	6
MATRIX RADAR SENSORS WITH SENSOR CABLES OR EQUAL	3
METER SOCKET DISCONNECT WITH BYPASS ON PEDESTAL	1
GPS UNIT	1

RADAR STOP BAR DETECTOR SCHEDULE

ITEM 678.15

DETECTORS					SETTINGS	
PLAN ID	STREET	DIRECTION	LANE	CALL Ø	TYPE	DETECTOR NUMBER
MR1	FEDERAL ST	NORTHBOUND	ALL APPROACHES	2	RADAR	1
MR2	LOWER NEWTON ST	WESTBOUND	ALL APPROACHES	3/5	RADAR	2
MR3	LOWER NEWTON ST	EASTBOUND	ALL APPROACHES	4	RADAR	3

ELECTRICAL CONDUIT SCHEDULE

ITEM 678.21

I.D.	STATION	TYPE
SI		SPARE SWEEP AT MAP-1

WIRED CONDUIT (PVC) AND
ELECTRICAL CONDUIT SLEEVE SCHEDULE

ITEM NUMBER	678.21	678.23		678.30	
FROM/TO	ELECTRICAL CONDUIT SPARE 2"	WIRED CONDUIT 2"	WIRED CONDUIT 3"	CONDUIT SLEEVE 8"	DESCRIPTION
POWER TO STANCHION	10	10			POWER (INCLUDES RISER)
STANCHION TO CABINET	10	10			POWER
CABINET TO POST #1	25		50		POST #1, POST#2, MAP-1, POST #4, POST #3 (3 RUNS)
POST #1 TO POST #2	60	120		45	POST#2, MAP-1(3 RUNS)
POST #2 TO MAP-1	80	160			MAP-1(3 RUNS)
POST #1 TO POST #4	90	90			POST #4, POST #3 (2 RUNS)
POST #4 TO POST #3	55	55		42	POST #3 (2 RUNS)
SUB-TOTALS	330	445	50	87	
ROUNDING	5	5	0	3	
TOTALS	335	450	50	90	

2016 DHV WEEKDAY TRAFFIC DATA

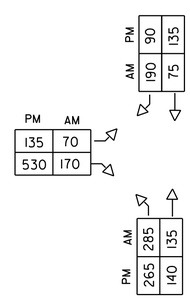

SIGNAL FACE ARRANGEMENT

(12" LED LENSES W/ 5" BACKPLATES) (16" LED)

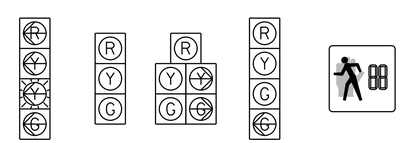

FACE 3 | FACE 4,8 | FACE 2A | FACE 2 | PED FACE P

EQUIPMENT NOTES

(A) SEE STANDARDS E-170, 171A, 171B, 171C, 173, & 175 FOR ADDITIONAL INFORMATION.

(B) SEE TRAFFIC SIGNAL NOTE SHEETS 110,111,AND 119 AND SINGLE MAST ARM CANTILEVER/FOOTING DETAIL SHEET 120 FOR ADDITIONAL INFORMATION.

(C) FOR SIGN DETAILS, SEE SHEETS 94-109.

LEGEND

NEW	LEGEND
CC	CONTROLLER CABINET
	SIGNAL HEAD
	CONDUIT
	PEDESTAL POST
	STANCHION
	MAST ARM
	PEDESTRIAN PUSH BUTTON
PB	PULL BOX
	OVERHEAD SIGN
	LUMINAIRE
MR#	MATRIX RADAR SENSOR
	MATRIX RADAR DETECTION ZONE

0 20 40
SCALE IN FEET

vhb

PROJECT NAME: ST. ALBANS
PROJECT NUMBER: HPP 8000(17 101/100

FILE NAME: 57414_TSPS3.dgn
PROJECT LEADER: M.A. COLGAN
DESIGNED BY: M. GRAHAM
TRAFFIC SIGNAL SHEET (1 OF 3)

PLOT DATE: 3/4/2016
DRAWN BY: J. ROBERT
CHECKED BY: C. BOBAY
SHEET 118 OF 230

TRAFFIC SIGNAL NOTES

ALL SIGNAL HEADS MOUNTED ON CANTILEVER ARMS SHALL BE POLYCARBONATE. BACKPLATES SHALL BE REQUIRED ON ALL SIGNAL HEADS.

A. NEW EQUIPMENT

1. THE TRAFFIC SIGNAL CONTROLLER AND ANCILLARY EQUIPMENT SHALL BE MANUFACTURED BY ECONOLITE CONTROL PRODUCTS, INC. OR NAZTEC, INC. OR APPROVED EQUIVALENT. TRAFFIC SIGNAL CONTROLLER SHALL BE NEMA TS2, TYPE 2, PROVIDED IN A NEMA "P"TYPE GROUND MOUNTED CABINET WITH BASE EXTENSION INSTALLED AS SHOWN ON THE TRAFFIC SIGNAL PLAN.
2. A DISCONNECT BREAKER FOR EACH CIRCUIT SHALL BE INSTALLED IN A RAINPROOF (NEMA 3R), LOCKED CABINET ON A STANCHION NEXT TO OR BELOW THE METER SOCKET. RECOMMEND OPTION #2 ON STD E-175.
3. ALL SIGNAL HEADS SHALL BE 12-INCH LIGHT EMITTING DIODES (LED).

   LUMINAIRE ON MAST ARM SHALL BE AN L.E.D. FIXTURE.
4. ALL SIGNAL EQUIPMENT SHALL BE PAINTED FLAT BLACK INCLUDING MAST ARM POLES, MAST ARMS, AND LUMINAIRE BRACKET ARMS.
5. GPS UNIT SHALL BE INSTALLED AND CONNECTED TO THE CONTROLLER TO MAINTAIN TIME BASED COORDINATION BETWEEN THIS
6. INTERSECTION AND THE MAIN ST WITH UPPER/LOWER NEWTON ST INTERSECTION

   UPON STARTUP THE SIGNAL TIMINGS SHOWN ON THE PLANS MAY REQUIRE FINE-TUNING IN THE FIELD BASED ON TRAFFIC OBSERVATION.

B. SIGNAL OPERATION

1. THE TRAFFIC SIGNALS SHALL NOT BE OPERATED BEFORE PAVEMENT MARKINGS AND SIGNAL RELATED SIGNING IS IN PLACE.
2. ALL SIGNALS SHALL DWELL ON THE LOWER WELDON ST. THRU MOVEMENT PHASES (4+8).
3. LOWER WELDON ST THRU PHASES 4+8 SHALL BE USED FOR THE START-UP PHASE FOLLOWING FLASHING OPERATION.
4. THE WESTBOUND LEFT TURN SHALL OPERATE WITH PROTECTED-PERMISSIVE FLASHING YELLOW ARROW PHASING.
5. FLASHING YELLOW ARROW SHALL NOT BE DISPLAYED WHEN OPERATING IN PROTECTED ONLY MODE.
6. ALL TRAFFIC SIGNAL CONDUIT SHALL BE PVC, SCHEDULE 80

C. TRAFFIC SIGNAL CONDUIT

1. MINIMUM CONDUIT SIZES SHALL BE 2-INCH FOR ALL APPLICATIONS
2. WHEN NEW CONDUIT IS PLACED BELOW THE ROADWAY OR ACROSS SIDE ROADS, IT SHALL BE PLACED IN AN PVC ELECTRICAL CONDUIT SLEEVE, SIZE AS SHOWN ON THE PLANS (8" MINIMUM OR MATCHING EXISTING SLEEVE SIZE).
3. WHERE PLANS INDICATE 2 CONDUIT RUNS, 1 SHALL BE FOR THE SIGNAL CABLE AND 1 SHALL BE A SPARE CONDUIT. WHERE PLANS INDICATE 3 CONDUIT RUNS, 1 SHALL BE FOR THE SIGNAL CABLE, 1 SHALL BE FOR THE RADAR DETECTION, AND 1 SHALL BE A SPARE
4. CONDUIT.

D. VEHICLE DETECTION

1. WAVETRONIX MATRIX RADAR SENSORS SHALL BE INSTALLED ON SIGNAL POLE UPRIGHT (MR2 AND MR3) BELOW THE MASTARM AND AIMED TO PICK UP VEHICLE DETECTION. MR1 SENSOR SHALL BE INSTALLED ON THE MAST ARM AND AIMED TO PICK UP VEHICLE DETECTION.
2. ANY CABLE FOR THE RADAR STOP BAR DETECTION SHALL BE INCIDENTAL TO ITEM 678.15.
3. ALL DETECTORS SHALL FAIL IN THE "ON" MODE.

E. GENERAL

1. THE CONTRACTOR SHALL ACQUIRE ALL NECESSARY PERMITS AND MAKE ALL NECESSARY ARRANGEMENTS WITH THE UTILITY COMPANY TO MAINTAIN THE EXISTING POWER SUPPLY TO THE SIGNAL EQUIPMENT.
2. SEE SUPPLEMENTAL SPECIFICATIONS FOR SECTIONS 678, 679, 752 & 753 FOR ADDITIONAL INFORMATION.

TIMING AND PHASING

		PHASE 2 (DWELL)									PHASE 9									PHASE 3+8									PHASE 4+8									
		R/W	CLEAR TO								R/W	CLEAR TO								R/W	CLEAR TO								R/W	CLEAR TO								
			Ø 9				Ø 3+8		Ø 4+8			Ø 3+8		Ø 4+8		Ø 2					Ø 4+8		Ø 2			Ø 9			Ø 2		Ø 9			Ø 3+8			
OFF PEAK REST OF DAY	VEHICLE	3																		3									3									
	MINIMUM	10	4	2			4	2		4	2									5	4	2		4	2		4	2	5	4	2		4	2		4	2	
	MAXIMUM	35	4	2			4	2		4	2									25	4	2		4	2		4	2	25	4	2		4	2		4	2	
	MAXIMUM2																																					
	MAXIMUM3																																					
	PED ACT										7	10	3	1		3	1		3	1																		
AM PEAK 6-8 AM	VEHICLE	3																		3									3									
	MINIMUM	10	4	2			4	2		4	2									5	4	2		4	2		4	2	5	4	2		4	2		4	2	
	MAXIMUM	30	4	2			4	2		4	2									30	4	2		4	2		4	2	30	4	2		4	2		4	2	
	MAXIMUM2																																					
	MAXIMUM3																																					
	PED ACT										7	10	3	1		3	1		3	1																		
PM PEAK 2-6 PM	VEHICLE	3																		3									3									
	MINIMUM	10	4	2			4	2		4	2									5	4	2		4	2		4	2	5	4	2		4	2		4	2	
	MAXIMUM	45	4	2			4	2		4	2									20	4	2		4	2		4	2	20	4	2		4	2		4	2	
	MAXIMUM2																																					
	MAXIMUM3																																					
	PED ACT										7	10	3	1		3	1		3	1																		
	FACE 2	G Y	Y	R		Y	R		Y	R	R	R	R		R	R		R	R	R	R	R		R	R		R	R	R	R	R		R	R		R	R	FY
	FACE 2A	G Y	Y	R		Y	R		Y	R	R	R	R		R	R		R	R	G Y	Y	R		Y	R		Y	R	R	R	R		R	R		R	R	FY
	FACE 3	R R	R	R		R	R		R	R	R	R	R		R	R		R	R	G	Y	FY		Y	R		Y	R	FY	Y	R		Y	R		Y	R	FR
	FACE 4	R	R	R		R	R		R	R	R	R	R		R	R		R	R	R	R	R		R	R		R	R	G	Y	R		Y	R		Y	R	FR
	FACE 8	R	R	R		R	R		R	R	R	R	R		R	R		R	R	G	G	G		Y	R		Y	R	G	Y	R		Y	R		G	G	FR
	PED	DW	DW	DW		DW	DW		DW	DW	W	FD	DW	DW		DW	DW		DW	DW	DW	DW	DW		DW	DW		DW	DW	DW	DW	DW		DW	DW		DW	DW	B

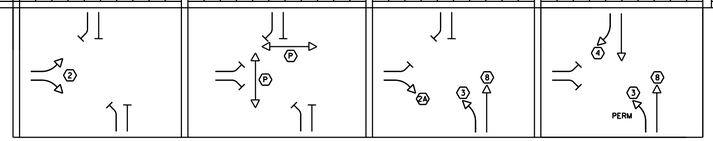

W = WALK, FD = FLASHING DON'T WALK, DW = DON'T WALK, B = BLANK, FR = FLASHING RED, FY = FLASHING YELLOW, SY = STEADY YELLOW

1. FACE NUMBERS ARE BASED ON NEMA PHASES
2. WESTBOUND LEFT-TURNS SHALL OPERATE UNDER PROTECTED/PERMISSIVE LEFT-TURN PHASING, USING THE 4-SECTION FLASHING YELLOW ARROW.

CONTROLLER IDENTIFICATION PLAQUE
NOT TO SCALE

LEGEND: - BLACK (NON-REFL.) - STAMPED PRIOR TO PAINTING
BACKGROUND: NATURAL ALUMINUM OR BRASS SURFACE

NOTES:

1.) THE PLAQUE SHALL BE MOUNTED ON THE TRAFFIC SIGNAL CONTROLLER CABINET. IT SHALL BE FASTENED TO THE CONTROLLER CABINET IN SUCH A MANNER AS TO BE NOT EASILY REMOVED, SUCH AS WELDED, RIVETED OR BOLTED WITH VANDAL PROOF BOLTS.
2.) THE LETTERS SHALL BE PUNCHED OR STAMPED, SUCH STAMPING SHALL PENETRATE AT LEAST ½ THE BASE MATERIAL THICKNESS.
3.) THE BASE MATERIAL FOR THE PLAQUE SHALL BE BRASS OR ALUMINUM WITH A MINIMUM THICKNESS OF 0.100 INCHES.

PROGRAM PERIODS OF OPERATION

	1 2 3 4 5 6 7 8 9 10 11 12 1 2 3 4 5 6 7 8 9 10 11 12 (AM PM AM)				
SUNDAY	1				
MONDAY	1	2	1	3	1
TUESDAY	1	2	1	3	1
WEDNESDAY	1	2	1	3	1
THURSDAY	1	2	1	3	1
FRIDAY	1	2	1	3	1
SATURDAY	1				

NOTES:

PLAN 1 - OFFPEAK (MAXIMUM 1): MIDNIGHT TO 6:00 AM, M-F
8:00 AM TO 2:00 PM, M-F
6:00 PM TO MIDNIGHT, M-F
ALL DAY SATURDAY AND SUNDAY

PLAN 2 - AM PEAK (MAXIMUM 2): 6:00 AM TO 8:00 AM, M-F

PLAN 3 - PM PEAK (MAXIMUM 3): 2:00 PM TO 6:00 PM, M-F

PROJECT NAME: ST. ALBANS
PROJECT NUMBER: HPP 8000(17 101/100

FILE NAME: 57414_TSPS3A.dgn
PROJECT LEADER: M.A. COLGAN
DESIGNED BY: M. GRAHAM
TRAFFIC SIGNAL SHEET (2 OF 3)

PLOT DATE: 3/4/2016
DRAWN BY: J. ROBERT
CHECKED BY: C. BOBAY
SHEET 119 OF 230

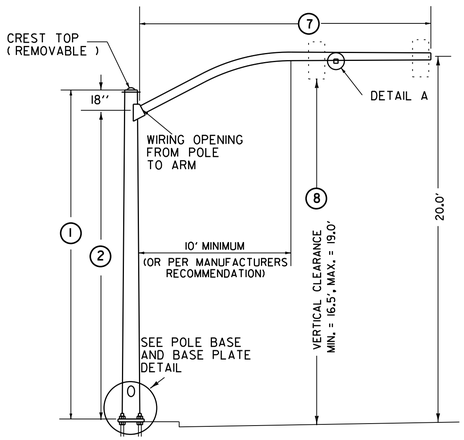

TYPE AI

(SPECIAL CURVED MAST ARM)

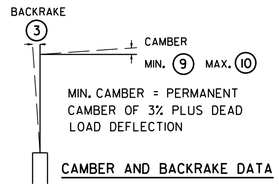

MIN. CAMBER = PERMANENT
CAMBER OF 3% PLUS DEAD
LOAD DEFLECTION

CAMBER AND BACKRAKE DATA

POLE BASE DIAMETER 4

POLE GAUGE 5

POLE TAPER RATE 6

ARM DIAMETER 11

ARM GAUGE 12

ARM TAPER RATE 13

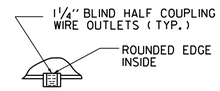

DETAIL A

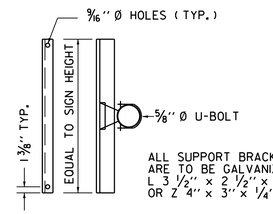

ALL SUPPORT BRACKETS
ARE TO BE GALVANIZED
L 3 1/2" x 2 1/2" x 5/16"
OR Z 4" x 3" x 1/4"

SIGN ON SINGLE
MAST ARM

SIGN BRACKET DETAILS

ANCHOR BOLT DETAIL		
SIZE	L(IN)	T(IN)
1- 1/4" X 48"	42	8
1- 1/2" X 60"	54	9
1- 3/4" X 90"	84	9
2" X 96"	96	9

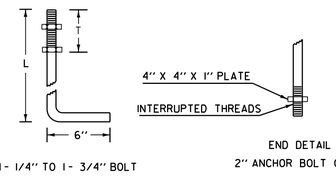

ANCHOR BOLT DETAIL

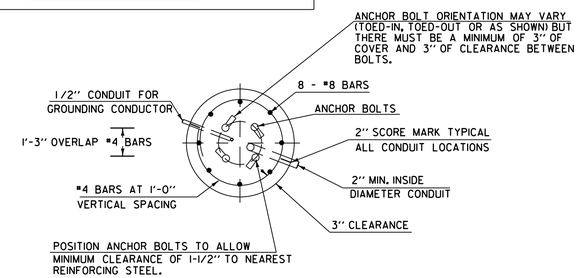

SECTION

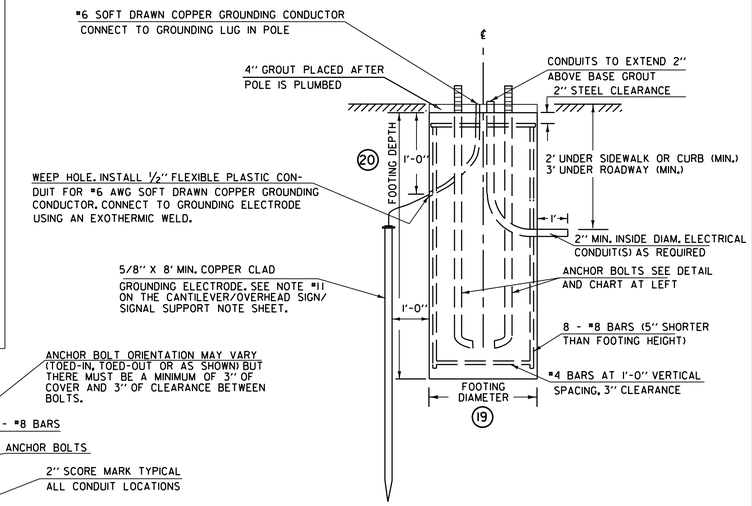

ELEVATION

CANTILEVER FOOTING DETAIL

(SPREAD FOOTINGS OR PILES ARE OPTIONAL)

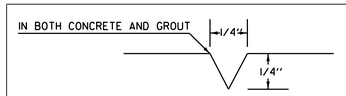

USED FOR CONDUIT LOCATION, SEE SECTION
DETAIL AT LEFT

2" SCORE MARK DETAIL

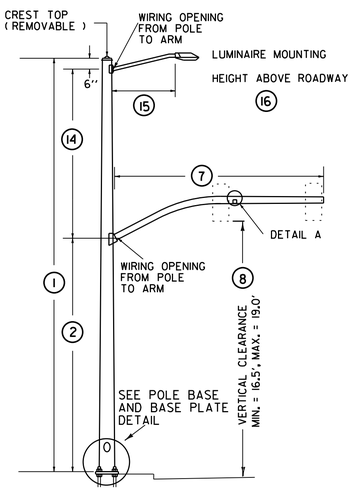

TYPE BI

(SPECIAL CURVED MAST ARM)

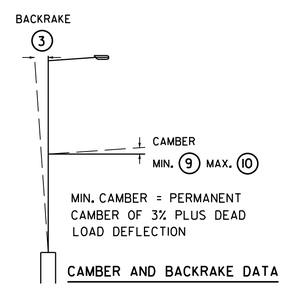

MIN. CAMBER = PERMANENT
CAMBER OF 3% PLUS DEAD
LOAD DEFLECTION

CAMBER AND BACKRAKE DATA

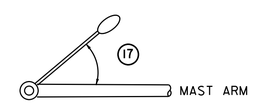

LUMINAIRE ORIENTATION

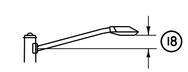

LUMINAIRE ARM RISE

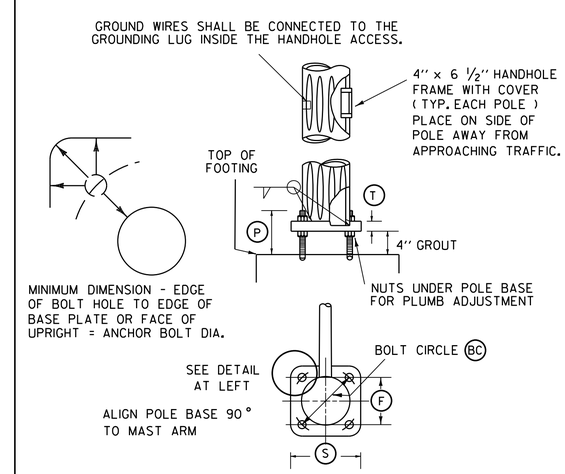

POLE BASE AND BASE PLATE DETAIL

STRUCTURE DIMENSIONS

		POLE DATA						ARM DATA							LIGHTING DATA					FOOTING DATA		BASE PLATE / BOLT DATA					
POLE	TYPE	1	2	3	4	5	6	7	8	9	10	11	12	13	14	15	16	17	18	19	20	BC	F	S	T	P	ANCHOR BOLT SIZE
MAP-1	BI	33	16					50	18						12.5	8		45	2								

NOTE:
DETAILS
NTS

SINGLE MAST ARM CANTILEVER / FOOTING DETAIL SHEET

PREPARED BY JAR DATE $$$DATE$$$
CHECKED BY CMB DATE $$$DATE$$$
DESIGN SUPERVISOR _____ DATE _____
PROJ. ST. ALBANS
HPP 8000(17 101/100
TRAFFIC SIGNAL SHEET NO. 3
SHEET 120 OF 230 SHEETS

VHB 57414.00

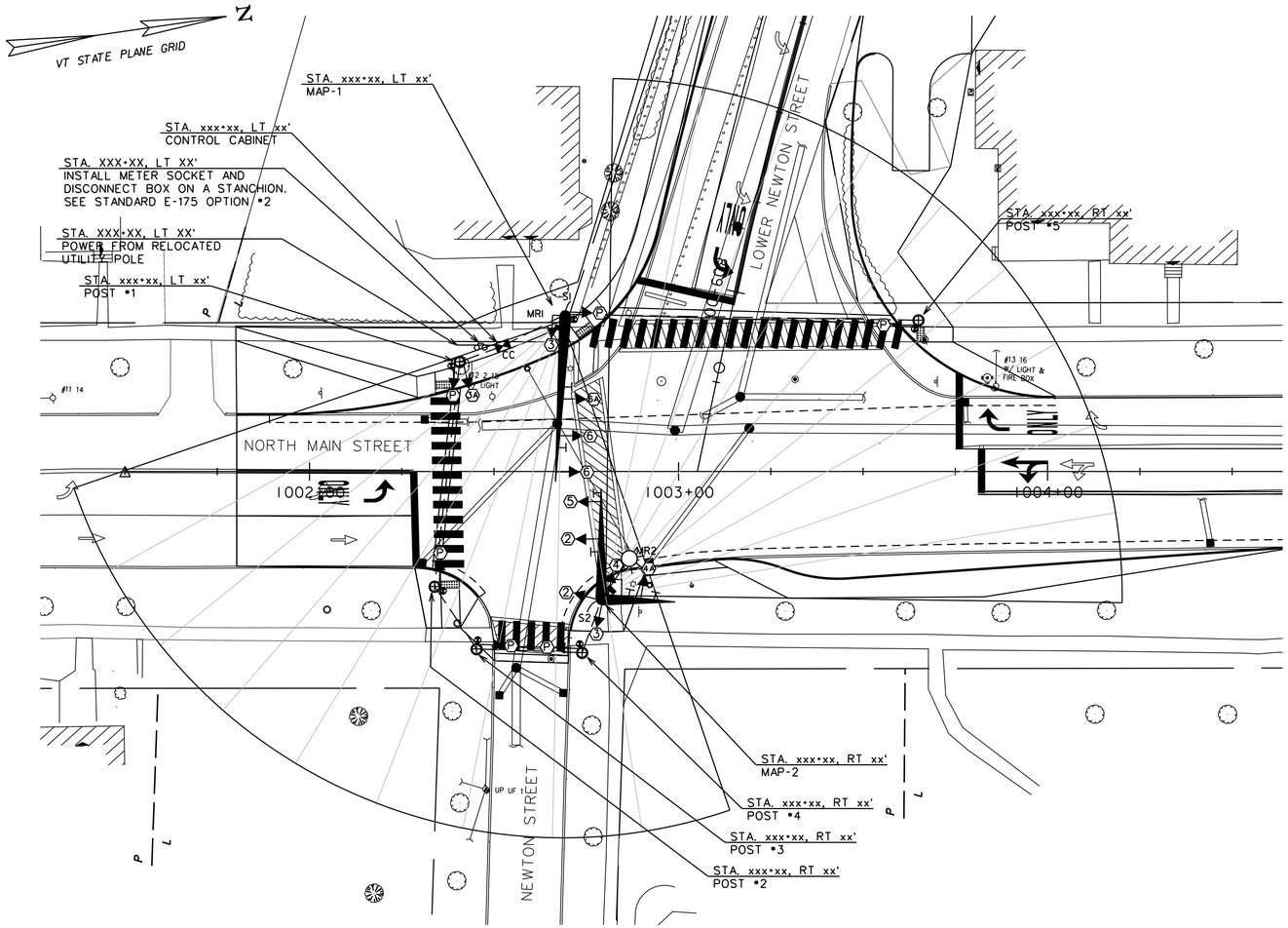

LIST OF MAJOR EQUIPMENT
NORTH MAIN ST AT UPPER / LOWER NEWTON ST INTERSECTION

EQUIPMENT ITEM 678.15	QUANTITY
TRAFFIC SIGNAL CONTROLLER ECONOLITE MODEL ASC/3 (TS2, TYPE 2) OR APPROVED EQUAL	1
P44 BASE MOUNTED CONTROLLER CABINET WITH EXTENDED BASE ON A CONCRETE FOUNDATION PAINTED BLACK WITH ANCILLARY CONTROL EQUIPMENT	1
BLACK PAINTED STEEL MAST ARM SIGNAL POLE WITH 45 FOOT MAST ARM (MAP-1)	1
BLACK PAINTED STEEL DOUBLE MAST ARM SIGNAL POLE WITH 20-FOOT AND 30-FOOT MAST ARM POLE AND 8 FOOT LIGHTING BRACKET ARM (MAP-2)	1
BLACK PAINTED PEDESTAL POST (8-FOOT)	5
ONE WAY, 3-SECTION, 12-INCH POLYCARBONATE MAST ARM MOUNTED LED TRAFFIC SIGNAL HEAD WITH TUNNEL VISORS AND LOUVERED BACKPLATES WITH ALL PIECES PAINTED BLACK	9
ONE WAY, 4-SECTION, 12-INCH POLYCARBONATE MAST ARM MOUNTED LED TRAFFIC SIGNAL HEAD WITH TUNNEL VISORS AND LOUVERED BACKPLATES WITH ALL PIECES PAINTED BLACK	2

EQUIPMENT ITEM 678.15	QUANTITY
PEDESTAL MOUNTED 16-INCH LED COUNTDOWN PEDESTRIAN SIGNAL HEADS PAINTED BLACK	5
BRACKET MOUNTED 16-INCH LED COUNTDOWN PEDESTRIAN SIGNAL HEADS PAINTED BLACK	1
VTRANS SPEC ACCESSIBLE PEDESTRIAN PUSHBUTTONS WITH R10-3e TYPE SIGN ASSEMBLY	6
ASTRO-BRACKETS OR EQUAL	9
MATRIX RADAR SENSORS WITH SENSOR CABLES OR EQUAL	2
METER SOCKET DISCONNECT WITH BYPASS ON PEDESTAL	1
GPS UNIT	1

RADAR STOP BAR DETECTOR SCHEDULE

ITEM 678.15

DETECTORS					SETTINGS	
PLAN ID	STREET	DIRECTION	LANE	CALL Ø	TYPE	DETECTOR NUMBER
MR1	NORTH MAIN ST	NORTHBOUND	ALL APPROACHES	2/5	RADAR	1
MR1	UPPER NEWTON ST	WESTBOUND	ALL APPROACHES	3	RADAR	2
MR2	NORTH MAIN ST	SOUTHBOUND	ALL APPROACHES	6	RADAR	3
MR2	LOWER NEWTON ST	EASTBOUND	ALL APPROACHES	4	RADAR	3

ELECTRICAL CONDUIT SCHEDULE

ITEM 678.21

I.D.	STATION	TYPE
S1		SPARE SWEEP AT MAP-1
S2		SPARE SWEEP AT MAP-2

WIRED CONDUIT (PVC) AND ELECTRICAL CONDUIT SLEEVE SCHEDULE

ITEM NUMBER	678.21	678.23		678.30	
FROM/TO	ELECTRICAL CONDUIT SPARE 2"	WIRED CONDUIT 2"	WIRED CONDUIT 3"	CONDUIT SLEEVE 8"	DESCRIPTION
POWER TO STANCHION	5	5			POWER (INCLUDES RISER)
STANCHION TO CABINET	5	5			POWER
CABINET TO MAP-1	20	40			MAP-1, POST #5 (3 RUNS)
MAP-1 TO POST #5	100	100		75	POST #5 (2 RUNS)
CABINET TO POST #1	10		20		POST #1, POST #2, POST #3, POST #4, MAP-2 (2 RUNS)
POST #1 TO POST #2	60	120		50	POST #2, POST #3, POST #4, MAP-2 (2 RUNS)
POST #2 TO POST #3	20	40			POST #3, POST #4, MAP-2 (2 RUNS)
POST #3 TO POST #4	30	60		20	POST #4, MAP-2 (2 RUNS)
POST #4 TO MAP-2	20	40			MAP-2 (2 RUNS)
SUB-TOTALS	270	430	20	145	
ROUNDING	5	5	5	5	
TOTALS	275	435	25	150	

2016 DHV WEEKDAY TRAFFIC DATA

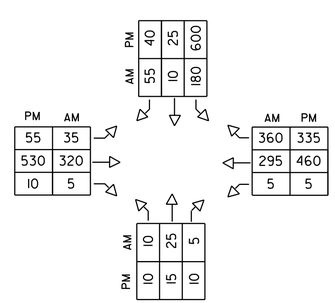

SIGNAL FACE ARRANGEMENT

(12" LED LENSES W/ 5" BACKPLATES) (16" LED)

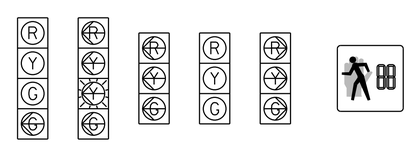

EQUIPMENT NOTES

(A) SEE STANDARDS E-170, 171A, 171B, 171C, 173, & 175 FOR ADDITIONAL INFORMATION.

(B) SEE TRAFFIC SIGNAL NOTE SHEETS 110,111, AND 122 AND SINGLE MAST ARM CANTILEVER/FOOTING DETAIL SHEET 123 AND DOUBLE MAST ARM CANTILEVER/FOOTING DETAIL SHEET 124 FOR ADDITIONAL INFORMATION.

(C) FOR SIGN DETAILS, SEE SHEETS 94-109.

LEGEND

NEW	LEGEND
CC	CONTROLLER CABINET
	SIGNAL HEAD
	CONDUIT
	PEDESTAL POST
	STANCHION
	MAST ARM
	PEDESTRIAN PUSH BUTTON
PB	PULL BOX
	OVERHEAD SIGN
	LUMINAIRE
MR	MATRIX RADAR SENSOR
	MATRIX RADAR DETECTION ZONE

0 20 40
SCALE IN FEET

vhb

PROJECT NAME: ST. ALBANS
PROJECT NUMBER: HPP 8000(17 101/100

FILE NAME: 57414_TSPS4.dgn
PROJECT LEADER: M.A. COLGAN
DESIGNED BY: M. GRAHAM
TRAFFIC SIGNAL SHEET (1 OF 4)

PLOT DATE: 3/4/2016
DRAWN BY: J. ROBERT
CHECKED BY: C. BOBAY
SHEET 121 OF 230

TRAFFIC SIGNAL NOTES

A. NEW EQUIPMENT

1. ALL SIGNAL HEADS MOUNTED ON CANTILEVER ARMS SHALL BE POLYCARBONATE. BACKPLATES SHALL BE REQUIRED ON ALL SIGNAL HEADS.

2. THE TRAFFIC SIGNAL CONTROLLER AND ANCILLARY EQUIPMENT SHALL BE MANUFACTURED BY ECONOLITE CONTROL PRODUCTS, INC. OR NAZTEC, INC. OR APPROVED EQUIVALENT. TRAFFIC SIGNAL CONTROLLER SHALL BE NEMA TS2, TYPE 2, PROVIDED IN A NEMA "P" TYPE GROUND MOUNTED CABINET WITH BASE EXTENSION INSTALLED AS SHOWN ON THE TRAFFIC SIGNAL PLAN.

3. A DISCONNECT BREAKER FOR EACH CIRCUIT SHALL BE INSTALLED IN A RAINPROOF (NEMA 3R), LOCKED CABINET ON A STANCHION NEXT TO OR BELOW THE METER SOCKET. RECOMMEND OPTION #2 ON STD E-175.

4. ALL SIGNAL HEADS SHALL BE 12-INCH LIGHT EMITTING DIODES (LED).

5. LUMINAIRE ON MAST ARM SHALL BE AN L.E.D. FIXTURE.

6. ALL SIGNAL EQUIPMENT SHALL BE PAINTED FLAT BLACK INCLUDING MAST ARM POLES, MAST ARMS, AND LUMINAIRE BRACKET ARMS.

7. GPS UNIT SHALL BE INSTALLED AND CONNECTED TO THE CONTROLLER TO MAINTAIN TIME BASED COORDINATION BETWEEN THIS INTERSECTION AND THE FEDERAL ST WITH LOWER NEWTON ST INTERSECTION.

B. SIGNAL OPERATION

1. UPON STARTUP THE SIGNAL TIMINGS SHOWN ON THE PLANS MAY REQUIRE FINE-TUNING IN THE FIELD BASED ON TRAFFIC OBSERVATION.

2. THE TRAFFIC SIGNALS SHALL NOT BE OPERATED BEFORE PAVEMENT MARKINGS AND SIGNAL RELATED SIGNING IS IN PLACE.

3. ALL SIGNALS SHALL DWELL ON THE US 7 THRU MOVEMENT PHASES (2+6).

4. US 7 THRU PHASES 2+6 SHALL BE USED FOR THE START-UP PHASE FOLLOWING FLASHING OPERATION.

5. THE NORTHBOUND LEFT TURN SHALL OPERATE WITH PROTECTED-PERMISSIVE FLASHING YELLOW ARROW PHASING.

6. FLASHING YELLOW ARROW SHALL NOT BE DISPLAYED WHEN OPERATING IN PROTECTED ONLY MODE.

7. THE SOUTHBOUND RIGHT TURN SHALL OPERATE AS AN OVERLAP TO PHASE 4

C. TRAFFIC SIGNAL CONDUIT

1. TRAFFIC SIGNAL CONDUIT SHALL BE PVC, SCHEDULE 80

2. MINIMUM CONDUIT SIZES SHALL BE 2-INCH FOR ALL APPLICATIONS

3. WHEN NEW CONDUIT IS PLACED BELOW THE ROADWAY OR ACROSS SIDE ROADS, IT SHALL BE PLACED IN AN PVC ELECTRICAL CONDUIT SLEEVE, SIZE AS SHOWN ON THE PLANS (8" MINIMUM OR MATCHING EXISTING SLEEVE SIZE).

4. WHERE PLANS INDICATE 2 CONDUIT RUNS, 1 SHALL BE FOR THE SIGNAL CABLE AND 1 SHALL BE A SPARE CONDUIT. WHERE PLANS INDICATE 3 CONDUIT RUNS, 1 SHALL BE FOR THE SIGNAL CABLE, 1 SHALL BE FOR THE RADAR DETECTION, AND 1 SHALL BE A SPARE CONDUIT.

D. VEHICLE DETECTION

1. WAVETRONIX MATRIX RADAR SENSORS SHALL BE INSTALLED ON THE SIGNAL POLE UPRIGHT BELOW THE MASTARM AND AIMED TO PICK UP VEHICLE DETECTION.

2. ANY CABLE FOR THE RADAR STOP BAR DETECTION SHALL BE INCIDENTAL TO ITEM 678.15.

3. ALL DETECTORS SHALL FAIL IN THE "ON" MODE.

E. GENERAL

1. THE CONTRACTOR SHALL ACQUIRE ALL NECESSARY PERMITS AND MAKE ALL NECESSARY ARRANGEMENTS WITH THE UTILITY COMPANY TO MAINTAIN THE EXISTING POWER SUPPLY TO THE SIGNAL EQUIPMENT.

2. SEE SUPPLEMENTAL SPECIFICATIONS FOR SECTIONS 678, 679, 752 & 753 FOR ADDITIONAL INFORMATION.

3. SEE THE CONTROLLER ID PLAQUE DETAIL ON THIS SHEET.

TIMING AND PHASING

		PHASE 2+5								PHASE 2+6 (DWELL)								PHASE 9								PHASE 3								PHASE 4								
		R/W	CLEAR TO							R/W	CLEAR TO							R/W	CLEAR TO							R/W	CLEAR TO							R/W	CLEAR TO							FLASHING OPERATION
			Ø 2+6		Ø 9		Ø 3		Ø 4		Ø 9		Ø 3		Ø 4		Ø 2+5		Ø 3		Ø 4		Ø 2+5		Ø 2+6		Ø 4		Ø 2+5		Ø 2+6		Ø 9		Ø 2+5		Ø 2+6		Ø 9		Ø 3		
OFF PEAK REST OF DAY	VEHICLE	3								3																3								3								
	MINIMUM	5	4	2		4	2		4	2		4	2		4	2		10	4	2		4	2		4	2		5	4	2		4	2		4	2		4	2		5	4	2		4	2		4	2
	MAXIMUM	10	4	2		4	2		4	2		4	2		4	2		30	4	2		4	2		4	2		10	4	2		4	2		4	2		4	2		25	4	2		4	2		4	2
	MAXIMUM2																																														
	MAXIMUM3																																														
	PED ACT																	7	21	3	1		3	1		3	1																			
AM PEAK 6-8 AM	VEHICLE	3								3																3								3								
	MINIMUM	5	4	2		4	2		4	2		4	2		4	2		10	4	2		4	2		4	2		5	4	2		4	2		4	2		4	2		5	4	2		4	2		4	2
	MAXIMUM	10	4	2		4	2		4	2		4	2		4	2		35	4	2		4	2		4	2		10	4	2		4	2		4	2		4	2		30	4	2		4	2		4	2
	MAXIMUM2																																														
	MAXIMUM3																																														
	PED ACT																	7	21	3	1		3	1		3	1																			
PM PEAK 2-6 PM	VEHICLE	3								3																3								3								
	MINIMUM	5	4	2		4	2		4	2		4	2		4	2		10	4	2		4	2		4	2		5	4	2		4	2		4	2		4	2		5	4	2		4	2		4	2
	MAXIMUM	10	4	2		4	2		4	2		4	2		4	2		30	4	2		4	2		4	2		10	4	2		4	2		4	2		4	2		20	4	2		4	2		4	2
	MAXIMUM2																																														
	MAXIMUM3																																														
	PED ACT																	7	21	3	1		3	1		3	1																			
	FACE 2	G	G	G		Y	R		Y	R		Y	R		Y	R		G	Y	R		Y	R		Y	R		R	R	R		R	R		R	R		R	R		R	R	R		R	R		R	R	FY
	FACE 3	R	R	R		R	R		R	R		R	R		R	R		R	R	R		R	R		R	R		R	R	R		R	R		R	R		R	R		G	Y	R		Y	R		Y	R	FR
	FACE 3A	~~R~~	~~R~~	~~R~~		~~R~~	~~R~~		~~R~~	~~R~~		~~R~~	~~R~~		~~R~~	~~R~~		~~R~~	~~R~~	~~R~~		~~R~~	~~R~~		~~R~~	~~R~~		~~R~~	~~R~~	~~R~~		~~R~~	~~R~~		~~R~~	~~R~~		~~R~~	~~R~~		~~G~~	~~Y~~	~~R~~		~~Y~~	~~R~~		~~Y~~	~~R~~	FR
	FACE 4	R	R	R		R	R		R	R		R	R		R	R		R	R	R		R	R		R	R		R	R	R		R	R		R	R		R	R		R	R	R		R	R		R	R	FR
	FACE 4A	R	R	R		R	R		R	R		R	R		R	R		R	R	R		R	R		R	R		R	R	R		R	R		R	R		R	R		G	Y	R		Y	R		Y	R	FR
	FACE 5	~~G~~	~~FY~~	~~FY~~		~~Y~~	~~R~~		~~Y~~	~~R~~		~~Y~~	~~R~~		~~Y~~	~~R~~		~~FY~~	~~Y~~	~~R~~		~~Y~~	~~R~~		~~Y~~	~~R~~		~~R~~	~~R~~	~~R~~		~~R~~	~~R~~		~~R~~	~~R~~		~~R~~	~~R~~		~~R~~	~~R~~	~~R~~		~~R~~	~~R~~		~~R~~	~~R~~	FR
	FACE 6	R	R	R		R	R		R	R		R	R		R	R		G	Y	R		Y	R		Y	R		R	R	R		R	R		R	R		R	R		R	R	R		R	R		R	R	FY
	FACE 6A	~~R~~	~~R~~	~~R~~		~~R~~	~~R~~		~~R~~	~~R~~		~~R~~	~~R~~		~~G~~	~~G~~		~~G~~	~~Y~~	~~R~~		~~Y~~	~~R~~		~~Y~~	~~R~~		~~R~~	~~R~~	~~R~~		~~R~~	~~R~~		~~R~~	~~R~~		~~R~~	~~R~~		~~G~~	~~Y~~	~~R~~		~~Y~~	~~R~~		~~Y~~	~~R~~	FY
	PED	DW	DW	DW		DW	DW		DW	DW		DW	DW		DW	DW		DW	DW	DW		DW	DW		DW	DW		W	FD	DW		DW	DW		DW	DW		DW	DW		DW	DW	DW		DW	DW		DW	DW	B

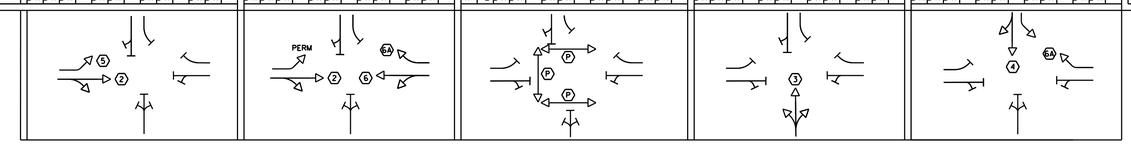

W = WALK, FD = FLASHING DON'T WALK, DW = DON'T WALK, B = BLANK, FR = FLASHING RED, FY = FLASHING YELLOW, SY = STEADY YELLOW

1. FACE NUMBERS ARE BASED ON NEMA PHASES

2. NORTHBOUND LEFT-TURNS SHALL OPERATE UNDER PROTECTED/PERMISSIVE LEFT-TURN PHASING, USING THE 4-SECTION FLASHING YELLOW ARROW.

3. SOUTHBOUND RIGHT TURNS SHALL OVERLAP LOWER NEWTON ST LEFT TURNS DURING PHASE 4.

CONTROLLER IDENTIFICATION PLAQUE
NOT TO SCALE

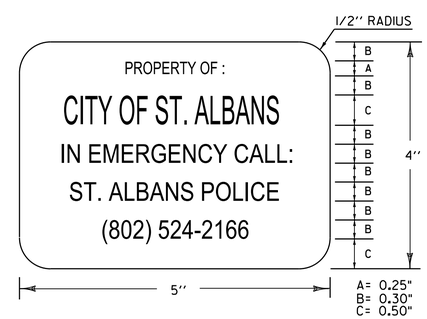

LEGEND: - BLACK (NON-REFL.) - STAMPED PRIOR TO PAINTING
BACKGROUND: NATURAL ALUMINUM OR BRASS SURFACE

NOTES:

1.) THE PLAQUE SHALL BE MOUNTED ON THE TRAFFIC SIGNAL CONTROLLER CABINET. IT SHALL BE FASTENED TO THE CONTROLLER CABINET IN SUCH A MANNER AS TO BE NOT EASILY REMOVED, SUCH AS WELDED, RIVETED OR BOLTED WITH VANDAL PROOF BOLTS.

2.) THE LETTERS SHALL BE PUNCHED OR STAMPED, SUCH STAMPING SHALL PENETRATE AT LEAST ½ THE BASE MATERIAL THICKNESS.

3.) THE BASE MATERIAL FOR THE PLAQUE SHALL BE BRASS OR ALUMINUM WITH A MINIMUM THICKNESS OF 0.100 INCHES.

PROGRAM PERIODS OF OPERATION

	1 2 3 4 5 6 7 8 9 10 11 12 1 2 3 4 5 6 7 8 9 10 11 12 (AM / PM / AM)				
SUNDAY	1				
MONDAY	1	2	1	3	1
TUESDAY	1	2	1	3	1
WEDNESDAY	1	2	1	3	1
THURSDAY	1	2	1	3	1
FRIDAY	1	2	1	3	1
SATURDAY	1				

NOTES:

PLAN 1 - OFFPEAK (MAXIMUM 1): MIDNIGHT TO 6:00 AM, M-F
8:00 AM TO 2:00 PM, M-F
6:00 PM TO MIDNIGHT, M-F
ALL DAY SATURDAY AND SUNDAY

PLAN 2 - AM PEAK (MAXIMUM 2): 6:00 AM TO 8:00 AM, M-F

PLAN 3 - PM PEAK (MAXIMUM 3): 2:00 PM TO 6:00 PM, M-F

PROJECT NAME: ST. ALBANS
PROJECT NUMBER: HPP 8000(17)

FILE NAME: 57414_TSPS4A.dgn
PROJECT LEADER: M.A. COLGAN
DESIGNED BY: M. GRAHAM
TRAFFIC SIGNAL SHEET (2 OF 4)

PLOT DATE: 3/4/2016
DRAWN BY: J. ROBERT
CHECKED BY: C. BOBAY
SHEET 122 OF 230

VHB 57414.00

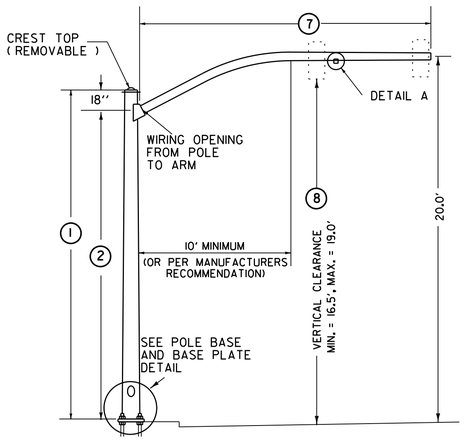

TYPE AI

(SPECIAL CURVED MAST ARM)

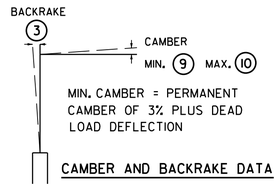

MIN. CAMBER = PERMANENT
CAMBER OF 3% PLUS DEAD
LOAD DEFLECTION

CAMBER AND BACKRAKE DATA

POLE BASE DIAMETER 4

POLE GAUGE 5

POLE TAPER RATE 6

ARM DIAMETER 11

ARM GAUGE 12

ARM TAPER RATE 13

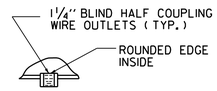

DETAIL A

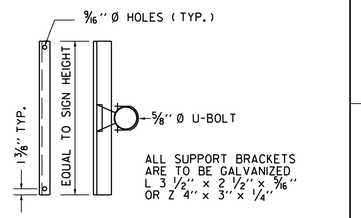

ALL SUPPORT BRACKETS
ARE TO BE GALVANIZED
L 3 1/2" x 2 1/2" x 5/16"
OR Z 4" x 3" x 1/4"

SIGN ON SINGLE
MAST ARM

SIGN BRACKET DETAILS

ANCHOR BOLT DETAIL		
SIZE	L(IN)	T(IN)
1- 1/4" X 48"	42	8
1- 1/2" X 60"	54	9
1- 3/4" X 90"	84	9
2" X 96"	96	9

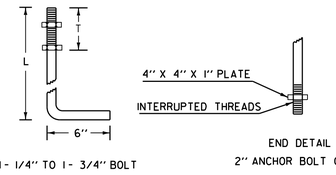

ANCHOR BOLT DETAIL

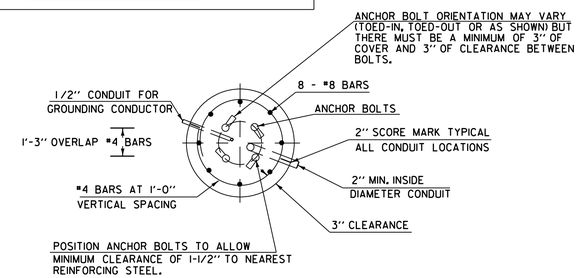

SECTION

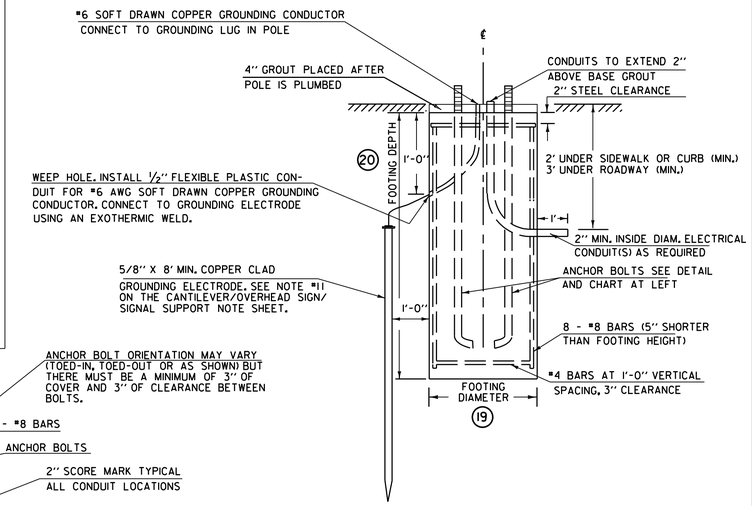

ELEVATION

CANTILEVER FOOTING DETAIL

(SPREAD FOOTINGS OR PILES ARE OPTIONAL)

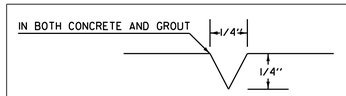

USED FOR CONDUIT LOCATION, SEE SECTION
DETAIL AT LEFT

2" SCORE MARK DETAIL

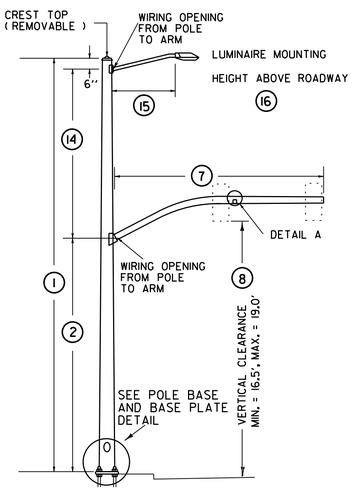

TYPE BI

(SPECIAL CURVED MAST ARM)

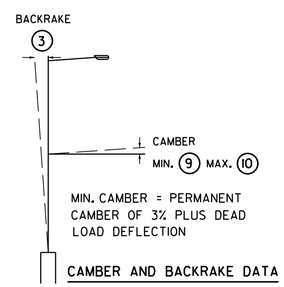

MIN. CAMBER = PERMANENT
CAMBER OF 3% PLUS DEAD
LOAD DEFLECTION

CAMBER AND BACKRAKE DATA

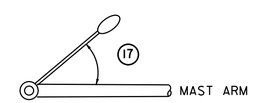

LUMINAIRE ORIENTATION

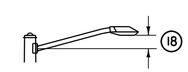

LUMINAIRE ARM RISE

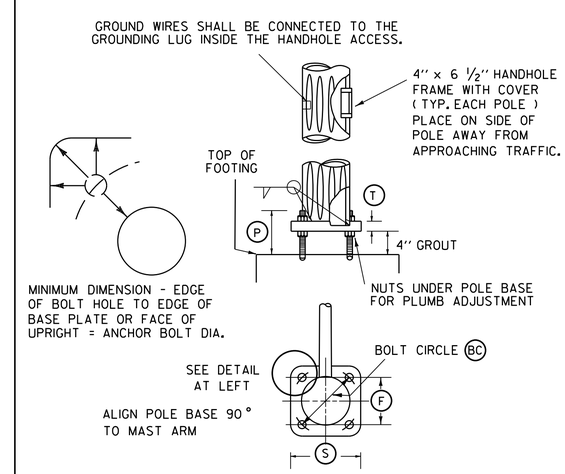

POLE BASE AND BASE PLATE DETAIL

STRUCTURE DIMENSIONS

		POLE DATA						ARM DATA							LIGHTING DATA					FOOTING DATA		BASE PLATE / BOLT DATA					
POLE	TYPE	1	2	3	4	5	6	7	8	9	10	11	12	13	14	15	16	17	18	19	20	BC	F	S	T	P	ANCHOR BOLT SIZE
MAP-1	AI	21.5	16					45	18																		

NOTE:
DETAILS
NTS

SINGLE MAST ARM CANTILEVER / FOOTING DETAIL SHEET

PREPARED BY JAR DATE $$$DATE$$$
CHECKED BY CMB DATE $$$DATE$$$
DESIGN SUPERVISOR _____ DATE _____
PROJ. ST. ALBANS
HPP 8000(17 101/100
TRAFFIC SIGNAL SHEET NO. 3
SHEET 123 OF 230 SHEETS

VHB 57414.00

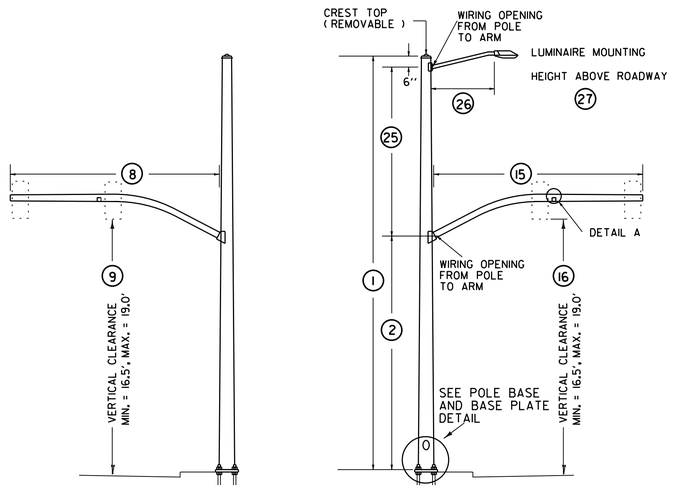

POLE BASE DIAMETER (3)
POLE GAUGE (4)
POLE TAPER RATE (5)

ARM A DIAMETER (10)
ARM A GAUGE (11)
ARM A TAPER RATE (12)

ARM B DIAMETER (17)
ARM B GAUGE (18)
ARM B TAPER RATE (19)

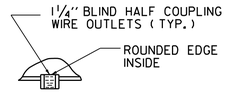

DETAIL A

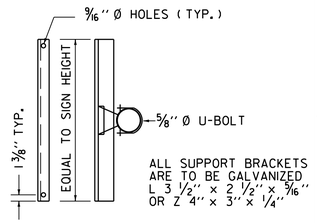

SIGN BRACKET DETAILS

ANCHOR BOLT DETAIL		
SIZE	L (IN)	T (IN)
1 - 1/4" X 48"	42	8
1 - 1/2" X 60"	54	9
1 - 3/4" X 90"	84	9
2" X 96"	96	9

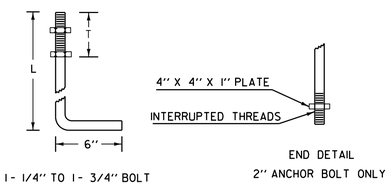

ANCHOR BOLT DETAIL

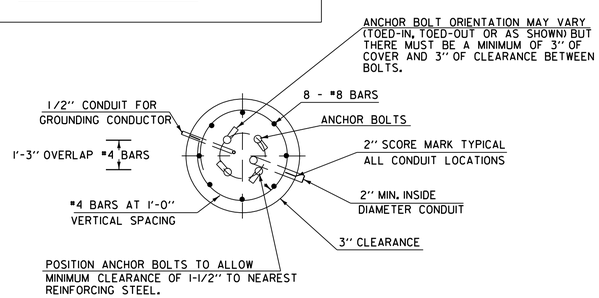

SECTION

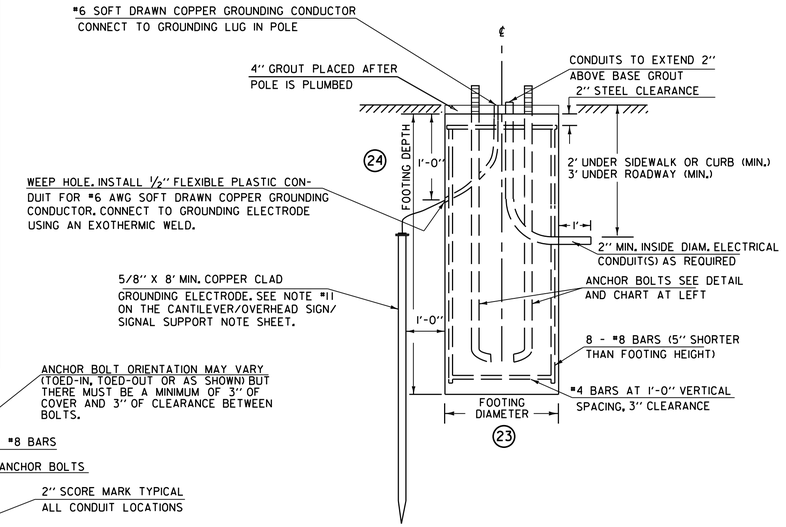

ELEVATION

CANTILEVER FOOTING DETAIL

(SPREAD FOOTINGS OR PILES ARE OPTIONAL)

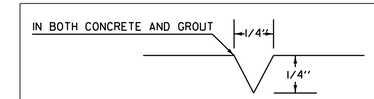

USED FOR CONDUIT LOCATION, SEE SECTION DETAIL AT LEFT

2" SCORE MARK DETAIL

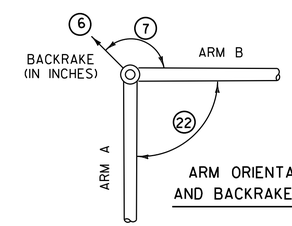

ARM ORIENTATION
AND BACKRAKE DATA

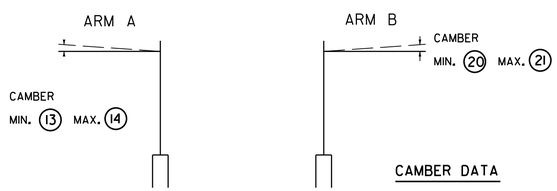

CAMBER DATA

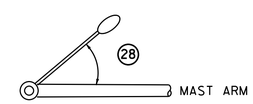

LUMINAIRE ORIENTATION

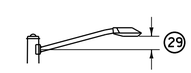

LUMINAIRE ARM RISE

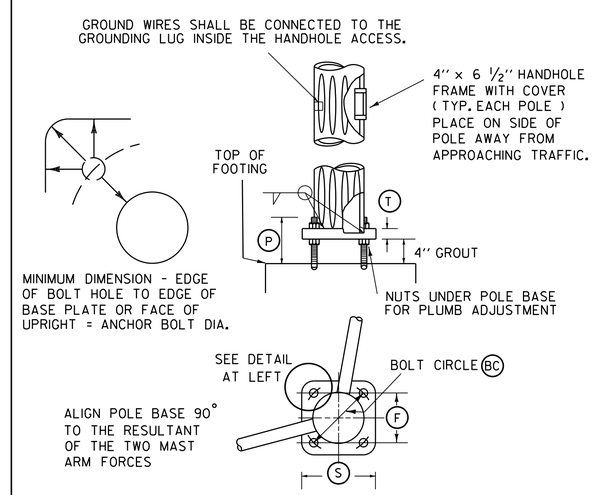

POLE BASE AND BASE PLATE DETAIL

STRUCTURE DIMENSIONS

POLE DATA									ARM DATA															FOOTING DATA		LIGHTING DATA					BASE PLATE / BOLT DATA					
POLE	TYPE	1	2	3	4	5	6	7	8	9	10	11	12	13	14	15	16	17	18	19	20	21	22	23	24	25	26	27	28	29	BC	F	S	T	P	ANCHOR BOLT SIZE
MAP-2	B	33	16						30	18						20	18									12.5	8		45	2						

NOTE:
DETAILS
NTS

DOUBLE MAST ARM CANTILEVER / FOOTING DETAIL SHEET

PREPARED BY JAR DATE $$$DATE$$$
CHECKED BY CMB DATE $$$DATE$$$
DESIGN SUPERVISOR _____ DATE _____
PROJ. ST. ALBANS
HPP 8000(17) 101/100
TRAFFIC SIGNAL SHEET NO. 4
SHEET 124 OF 230 SHEETS

VHB 57414.00

TRAFFIC CONTROL NOTES

GENERAL

THE FEDERAL STREET CONNECTOR PROJECT IS INTENDED TO BE CONSTRUCTED IN PHASES. THE PROJECT WILL BE IN BROKEN UP INTO SMALLER PROJECTS TO MATCH THE AVAILABLE FUNDING. THE CONTRACTOR SHALL BE RESPONSIBLE FOR DEVELOPING A PROJECT SPECIFIC TRAFFIC CONTROL PLAN TO MATCH EACH CONSTRUCTION PHASE.

THE FOLLOWING TRAFFIC CONTROL INFORMATION IS INTENDED TO BE A CONCEPTUAL PLAN FOR HOW THE WORK MAY PROCEED. THE CONTRACTOR SHALL SUBMIT A DETAILED TRAFFIC CONTROL PLAN TO THE RESIDENT ENGINEER. THE CONTRACTOR SHALL ALLOW AT LEAST ONE (1) WEEK FOR REVIEW AND APPROVAL. ALL CHANGES TO THE TRAFFIC CONTROL PLAN MUST BE APPROVED BY THE CITY OF ST. ALBANS AND THE ENGINEER. MODIFICATIONS TO THE APPROVED TRAFFIC CONTROL PLAN FOR VEHICLES OR PEDESTRIANS SHALL BE SUBMITTED TO THE ENGINEER AT LEAST ONE WEEK PRIOR TO THE IMPLEMENTATION OF THE CHANGE.

THE CONTRACTOR'S TRAFFIC CONTROL PLAN SHALL BE DEVELOPED IN ACCORDANCE WITH THE 2011 EDITION OF VTRANS STANDARD SPECIFICATIONS SECTION 641 - TRAFFIC CONTROL AND IN SUBSTANTIAL CONFORMANCE WITH THE 2009 EDITION OF THE MANUAL ON UNIFORM TRAFFIC CONTROL DEVICES (MUTCD) WITH LATEST INTERIMS. THE PLAN SHALL ACCOMMODATE VEHICLE TRAFFIC, PEDESTRIAN TRAFFIC, AND EMERGENCY SERVICES. THE TRAFFIC CONTROL PLAN SHALL INCLUDE ALL TEMPORARY SIGNS, PAVEMENT MARKINGS, CHANNELIZING DEVICES, PORTABLE MESSAGE BOARDS, ARROW PANELS, AND OTHER DEVICES REQUIRED TO PROVIDE COMPLETE MANAGEMENT OF TRAFFIC. ANY SIGNS NOT INCLUDED IN THE FHWA STANDARD HIGHWAY SIGNS BOOK SHALL INCLUDE SIGN FACE DIMENSIONS AND LAYOUT.

TRAFFIC SHALL BE MAINTAINED AT ALL TIMES. THE WORK SHALL INCLUDE ERECTING, MAINTAINING, AND REMOVING ALL TEMPORARY SIGNING AS SHOWN IN THE PLANS, AS REQUIRED BY SITE SPECIFIC WORK, AND AS DIRECTED BY THE ENGINEER.

DURING THE STAGED CONSTRUCTION, TRAFFIC CONTROL PLANS SHALL BE ESTABLISHED TO MAINTAIN THE CONTINUITY OF VEHICLE AND PEDESTRIAN TRAFFIC THROUGH THE CORRIDOR. SIGNS SHALL BE ADJUSTED AT THE COMPLETION OF EACH CONSTRUCTION PHASE AS SHOWN ON THE TRAFFIC CONTROL PLANS AND AS DIRECTED BY THE ENGINEER. THE CONTRACTOR SHALL MAINTAIN TEMPORARY SIGNING, AND OTHER SUPPORTING TRAFFIC CONTROLS THROUGHOUT CONSTRUCTION. INSTALLING, MAINTAINING, ADJUSTING, MODIFYING, AND REMOVING TRAFFIC CONTROLS SHALL BE INCLUDED IN THE UNIT PRICE BID FOR CONTRACT ITEM 641.10 TRAFFIC CONTROL.

TRAFFIC SHALL NOT BE CHANGED FROM ONE PHASE TO THE NEXT UNTIL ALL TEMPORARY SIGNING REQUIRED FOR THE SUBSEQUENT PHASE IS COMPLETED. ANY CONFLICTING PAVEMENT MARKINGS SHALL BE MASKED WITH PAVEMENT MARKING MASK OR REMOVED BY GRINDING. EXISTING PAVEMENT MARKINGS THAT ARE TO REMAIN FOR LATER USE SHALL BE MASKED WITH PAVEMENT MARKING MASK. PAVEMENT MARKING MASK AND/OR REMOVAL OF EXISTING PAVEMENT MARKINGS SHALL BE INCLUDED IN THE UNIT PRICE BID FOR CONTRACT ITEM 641.10 TRAFFIC CONTROL.

EACH SEGMENT OF ROADWAY CONSTRUCTED SHALL ALLOW FOR ALL UTILITY INSTALLATION AND DRAINAGE INSTALLATION. EACH SEGMENT SHALL PROVIDE INTERIM PLACEMENT OF DRAINAGE GRATES AS NEEDED. TEMPORARY PAVEMENT MARKINGS SHALL BE PLACED ON ALL RECONSTRUCTED ROADWAY SEGMENTS PRIOR TO OPENING THAT SEGMENT TO TRAFFIC. AT THE COMPLETION OF ALL CONSTRUCTION PHASES, THE CONTRACTOR SHALL APPLY THE TOP COURSE PAVEMENT AND APPLY THE FINAL PAVEMENT MARKINGS.

REFLECTORIZED DRUMS SHALL BE USED TO DELINEATE THE WORK ZONE FROM THE TRAVELED WAY FOR VERTICAL DROP OFFS OF NOT MORE THAN THREE INCHES. FOR VERTICAL GRADE CHANGES GREATER THAN THREE INCHES, THE SLOPE ADJACENT TO THE TRAVELED WAY SHALL BE AT LEAST 4H:1V OR FLATTER WHEN UNATTENDED AND SHALL BE SEPARATED FROM THE TRAVELED WAY BY THREE HORIZONTAL FEET AND REFLECTORIZED DRUMS. FOR SHORT DURATIONS OF NOT MORE THAN THREE DAYS, THE SLOPE ADJACENT TO THE TRAVELED WAY MAY BE 3H:1V BEHIND DRUMS. DURING ACTIVE AND ATTENDED CONSTRUCTION ACTIVITIES, AND IN THE PRESENCE OF UNIFORMED TRAFFIC OFFICERS, THE ADJACENT STREET TRAFFIC SHALL BE A MINIMUM OF THREE FEET FROM THE EDGE OF THE EXCAVATION AND DELINEATED BY REFLECTORIZED DRUMS. IF THE GRADE CHANGE ADJACENT TO THE TRAVELED WAY IS MORE SEVERE THAN THESE CONDITIONS IN A WORK AREA , TEMPORARY CONCRETE BARRIER WALL SHALL BE USED TO SEPARATE THE WORK ZONE FROM ADJACENT TRAFFIC. ALL TEMPORARY CONCRETE BARRIER WALL SHALL HAVE THE BLUNT ENDS THAT FACE ON-COMING TRAFFIC PROTECTED IN ACCORDANCE WITH THE AASHTO ROADSIDE DESIGN GUIDE AND VAOT STANDARDS. TEMPORARY CONCRETE BARRIER WILL BE SUBSIDIARY TO ITEM 641.10, TRAFFIC CONTROL.

EXISTING SIGNS SHALL REMAIN UNTIL THEY ARE NO LONGER REQUIRED. EXISTING SIGNS WHICH CONFLICT WITH TEMPORARY TRAFFIC CONTROLS SHALL BE COMPLETELY COVERED WITH SOLID COVERS PAINTED BLACK OR REMOVED/RELOCATED AS NEEDED. TEMPORARY SIGNS SHALL BE INSTALLED AS SHOWN IN THE PLANS AND THE CONTRACTOR'S APPROVED TRAFFIC CONTROL PLANS. NEW SIGNING SHALL BE INSTALLED AS IT BECOMES APPLICABLE. ALL PROPOSED SIGNING SHALL BE INSTALLED AND ALL SIGNS TO BE REMOVED SHALL BE REMOVED PRIOR TO THE APPLICATION OF THE FINAL PAVEMENT MARKINGS.

CONTRACTOR SHALL MAINTAIN PEDESTRIAN ACCESS TO ALL COMMERCIAL AND MUNICIPAL PROPERTIES DURING BUSINESS HOURS. PEDESTRIAN ACCESS SHALL MEET ALL APPLICABLE AMERICANS WITH DISABILITIES ACT (ADA) REQUIREMENTS. POSITIVE GUIDANCE SHALL BE PROVIDED TO SEPARATE PEDESTRIAN ACCESS FROM THE WORK AREA AND VERTICAL GRADE CHANGES. ACCESS TO PROPERTIES MAY BE RESTRICTED FOR SHORT DURATIONS OF NOT MORE THAN TWO HOURS WITH THE PERMISSION AND PRIOR NOTIFICATION OF THE OWNER DURING BUSINESS HOURS. CONTRACTOR SHALL COORDINATE MAJOR WORK ADJACENT TO COMMERCIAL AND MUNICIPAL ACCESS AREAS WITH THE OWNER AND CITY AT LEAST ONE WEEK PRIOR TO STARTING THE WORK IN THE AREA.

SPECIAL CARE MUST BE TAKEN TO PROVIDE ACCESS THROUGH THE WORK ZONES FOR EMERGENCY VEHICLES. THE CONTRACTOR SHALL COORDINATE WITH BOTH POLICE AND FIRE DEPARTMENTS TO DETERMINE THEIR MINIMUM ACCESS REQUIREMENTS BEFORE PROCEEDING TO THE NEXT PHASE OF CONSTRUCTION. CONTRACTOR SHALL ENSURE THAT ACCESS IS AVAILABLE TO ALL PROPERTIES AT ALL TIMES FOR EMERGENCY VEHICLES.

COORDINATION WITH ADJACENT CITY PROJECTS

THE CONTRACTOR SHALL BE AWARE THAT THERE MAY BE OTHER STATE, CITY AND PRIVATE CONSTRUCTION PROJECTS PLANNED TO BE UNDER CONSTRUCTION EITHER ADJACENT TO OR IN THE VICINITY OF THIS PROJECT. THE CONTRACTOR SHALL COORDINATE CONSTRUCTION SEQUENCING AND TRAFFIC CONTROL MEASURES WITH THE CITY AND THE RESIDENT ENGINEER TO MINIMIZE CONFLICTS BETWEEN PROJECTS. RESTRICTIONS TO LANE, STREET OR SIDEWALK CLOSURES MAY BE REQUIRED BETWEEN PROJECTS TO EFFICIENTLY MOVE VEHICLE AND PEDESTRIAN TRAFFIC THRU THE CONSTRUCTION AREA.

TRAFFIC MANAGEMENT AND ROADWAY CONSTRUCTION SEQUENCING

IT IS POSSIBLE THAT THE WORK WILL NOT ALL BE COMPLETED IN THE FIRST CALENDAR YEAR AND THIS COULD REQUIRE ONE (1) WINTER SHUTDOWN PERIOD WHEN THE WEATHER IS NOT CONDUCIVE TO CONTINUED CONSTRUCTION ACTIVITIES. THE CONTRACTOR AND ENGINEER SHALL COORDINATE THE BEGINNING AND ENDING OF THE WINTER SHUTDOWN PERIODS IN ACCORDANCE WITH VAOT PROCEDURES. AT LEAST TWO (2) WEEKS PRIOR TO THE ANTICIPATED WINTER SHUTDOWN, THE CONTRACTOR SHALL PREPARE ALL WORK AREAS TO BE REOPENED TO TRAFFIC. THIS INCLUDES PROVIDING A PAVED SURFACE FOR ALL STREETS AND SIDEWALKS, FRESH PAINTED PAVEMENT MARKINGS, AND ALL NECESSARY TRAFFIC SIGNS.

FINAL PAVING SHALL BE PERFORMED AT NIGHT WITH THE DATES AND HOURS OF OPERATION COORDINATED WITH AND APPROVED BY THE ENGINEER AND THE CITY.

PEDESTRIAN TEMPORARY TRAFFIC CONTROL NOTES

1. THE CONTRACTOR SHALL MAINTAIN PEDESTRIAN THROUGH MOVEMENTS FROM ONE END OF THE CONSTRUCTION AREA TO THE OTHER, ON AT LEAST ONE SIDE OF THE STREET DURING CONSTRUCTION. ANY SIDEWALK CLOSURES SHALL MEET THE REQUIREMENTS OF THE MUTCD, PART 6.
2. PEDESTRIAN ACCESS SHALL BE PROVIDED TO ALL ADJACENT PROPERTIES, BUILDINGS, RESIDENCES AND COMMERCIAL PROPERTIES AT ALL TIMES. THIS MAY INCLUDE TEMPORARY WALKWAYS SPANNING THE CONSTRUCTION AREA.
3. IF SIDEWALKS ARE CLOSED, A TEMPORARY PEDESTRIAN ACCESS ROUTE (TPAR) SHALL BE PROVIDED ON THE SAME SIDE OF THE ROAD AS THE CLOSED SIDEWALK, IF POSSIBLE. SIGNS AND BARRICADES SHALL BE USED TO PROVIDE ADVANCE NOTICE OF THE CLOSURE AND THE ROUTE OF ANY PEDESTRIAN DETOURS. THE TPAR SHALL HAVE A MINIMUM UNOBSTRUCTED WIDTH OF 4 FEET. IF THE TPAR IS LESS THAN 5 FEET IN WIDTH, A 5 FOOT BY 5 FOOT PASSING SPACE SHOULD BE PROVIDED AT LEAST EVERY 200 FEET. THE SURFACE OF THE TPAR SHALL BE SMOOTH AND CONTINUOUS FOR THE LENGTH OF THE TPAR. THE TPAR SHALL MAINTAIN THE SAME LEVEL OF ACCESSIBILITY AND DETECTABILITY AS THE FACILITY THAT IS BEING CLOSED. THE TPAR SHALL NOT LEAD PEDESTRIANS INTO CONFLICTS WITH VEHICLES, EQUIPMENT, OR CONSTRUCTION OPERATIONS.
4. IF THE TPAR IS ADJACENT TO MOVING TRAFFIC, CONSTRUCTION OPERATIONS/EQUIPMENT, OR DROP-OFFS, THEN CRASH WORTHY CHANNELIZING DEVICES THAT MEET THE REQUIRMENTS OF THE MUTCD SHALL BE USED.
5. THE CONTRACTOR SHALL NOT STORE OR PLACE ANY CONSTRUCTION MATERIALS, EQUIPMENT OR SIGNS IN THE PEDESTRIAN PATH OF TRAVEL.
6. THE CONTRACTOR'S OPERATIONS SHALL NOT OCCUPY SIDEWALKS EXCEPT WHERE PROPER PROTECTION AND A TPAR HAVE BEEN PROVIDED.
7. THE CONTRACTOR SHALL PROVIDE A TEMPORARY PEDESTRIAN TRAFFIC CONTROL PLAN FOR REVIEW AND WRITTEN APPROVAL A MINIMUM OF TWO WEEKS BEFORE SUCH PLAN IS IMPLEMENTED. THIS PLAN SHALL DETAIL THE CONSTRUCTION PHASING AND SCHEDULE AND THE SPECIFIC METHODS OF MAINTAINING SAFE PEDESTRIAN ACCESS THROUGHOUT THE CONSTRUCTION AREA. THIS PLAN SHALL PROVIDE THE LOCATION AND DETAILS OF TEMPORARY CONSTRUCTION SIGNING, MARKINGS, BARRICADES, CHANNELIZING DEVICES, TPARs AND METHODS TO MAINTAIN ACCESS TO ADJACENT PROPERTIES, BUSINESSES, RESIDENCES, ETC.

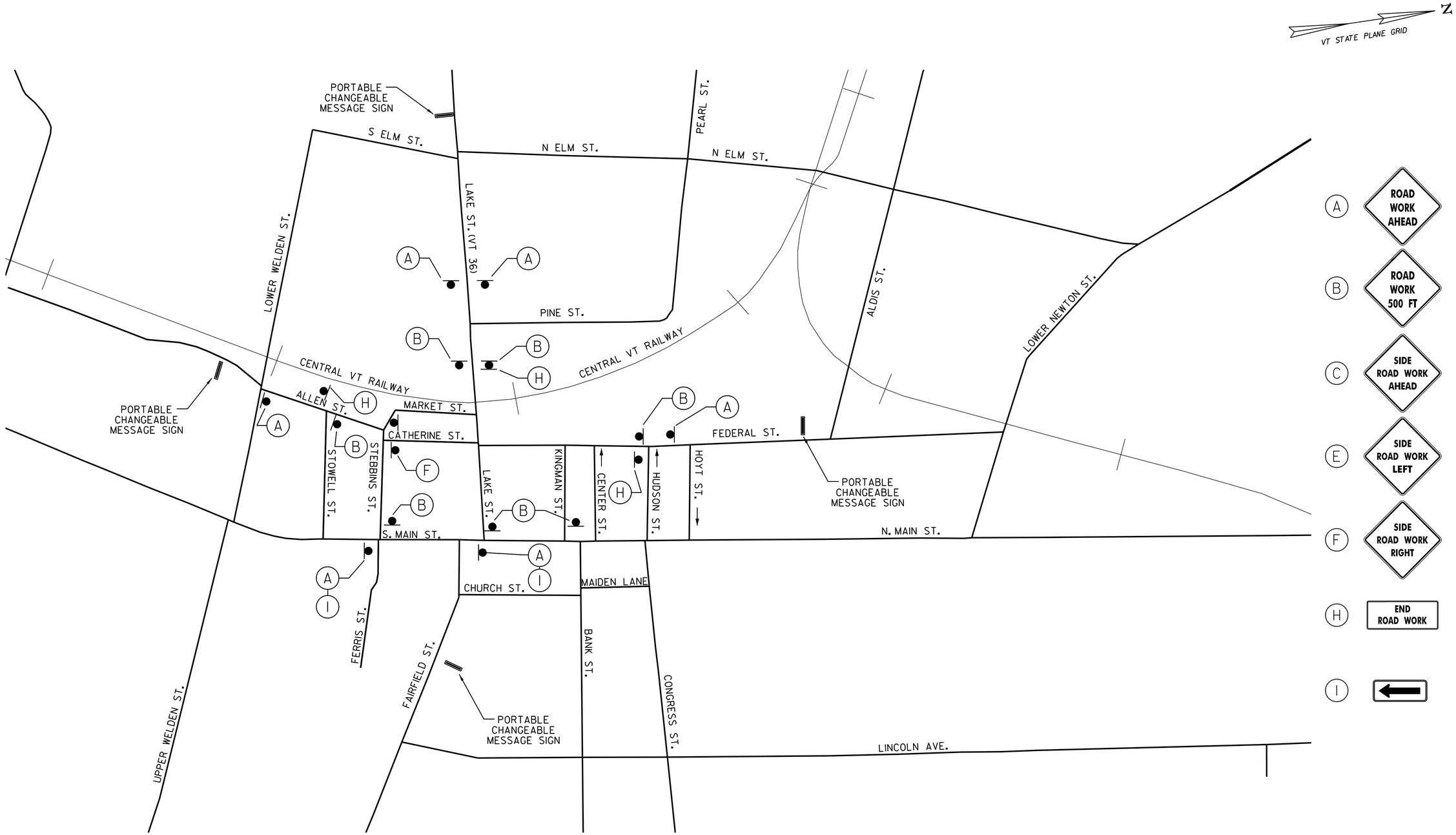

TYPICAL CONSTRUCTION APPROACH SIGNING FOR A PHASE I PROJECT THAT INCLUDES THE FOLLOWING:

MARKET STREET RECONSTRUCTION
CATHERINE STREET RECONSTRUCTION
FEDERAL STREET RECONSTRUCTION (LAKE STREET - KINGMAN STREET)
LAKE STREET RECONSTRUCTION (NECR RAILROAD TO FEDERAL STREET)
ALLEN STREET / STEBBINS STREET INTERSECTION RECONSTRUCTION

0 300 600
SCALE IN FEET

PROJECT NAME: ST. ALBANS	
PROJECT NUMBER: HPP 8000(17)	
FILE NAME: 57414_CONS.dgn	PLOT DATE: 3/4/2016
PROJECT LEADER: J. D. SALADINO	DRAWN BY: G.A. GOMEZ
DESIGNED BY: M.J. SERVETAS	CHECKED BY: M.J. SERVETAS
CONSTRUCTION APPROACH SIGNING PLAN	SHEET 126 OF 230

VHB 57414.00

EPSC PLAN NARRATIVE

1.1 PROJECT DESCRIPTION

THIS PROJECT, ST. ALBANS HPP 8000(17), IS LOCATED WEST ON MAIN STREET IN ST. ALBANS VERMONT. THE PROJECT WILL CONSIST OF THE FOLLOWING PRINCIPAL COMPONENTS:

- CONSTRUCTION OF THE NASON STREET CONNECTOR, 1000-FT OF NEW ROADWAY CONNECTING THE INTERSTATE ACCESS ROAD WITH LEMNAH DRIVE.
- REALIGNMENT OF LEMNAH DRIVE AND ALLEN STREET
- REPLACEMENT OF THE LEMNAH DRIVE BRIDGE OVER STEVENS BROOK WITH A XX-FT WIDE, XX-FT TALL, XX-FT LONG PRECAST CONCRETE BOX CULVERT
- RECONSTRUCTION OF THE LOWER WELDEN STREET, LEMNAH DRIVE, AND ALLEN STREET INTERSECTION
- RECONSTRUCTION OF MARKET STREET, AND CATHERINE STREET.
- RECONSTRUCTION OF THE LAKE STREET, CATHERINE STREET, MARKET STREET, FEDERAL STREET INTERSECTION.
- REHABILITATION OF FEDERAL STREET
- VERTICAL REALIGNMENT AND WIDENING OF LOWER NEWTON ROAD
- INSTALLATION OF DRAINAGE INFRASTRUCTURE, INCLUDING STORMWATER TREATMENT PONDS, *SUBSURFACE CATCHMENT AND CONVEYANCE STRUCTURES, REHABILITATION OF EXISTING* STORMWATER STRUCTURES, AND TYING INTO EXISTING MUNICIPAL STORMWATER SYSTEMS.

NOTE: AREA OF DISTURBANCE INCLUDES LIMITS OF EARTH DISTURBANCE WITHIN THE PROJECT AREA, AS WELL AS WASTE, BORROW AND STAGING AREAS, AND OTHER EARTH DISTURBING ACTIVITIES WITHIN OR DIRECTLY ADJACENT TO THE PROJECT LIMITS AS SHOWN ON THE ATTACHED EPSC PLAN.

TOTAL AREA OF DISTURBANCE AS SHOWN ON THE ATTACHED EPSC PLAN IS APPROXIMATELY 11.5 ACRES.

THE PROJECT WILL BE CONSTRUCTED IN SIX CONSTRUCTION PHASES AS FUNDING FOR EACH PHASE BECOMES AVAILABLE. SEE SECTION 1.5 SEQUENCING AND STAGING FOR MORE INFORMATION.

1.2 SITE INVENTORY

1.2.1 TOPOGRAPHY

THE TOPOGRAPHY OF THE AREA IS MOSTLY DEVELOPED URBAN AREA. THE GRADE GENERALLY RUNS FROM EAST TO WEST TOWARD LAKE CHAMPLAIN. THE NASON STREET CONNECTOR AND LOWER NEWTON ROAD ARE THE ONLY TWO ROADS WITH SIGNIFICANT GRADE; 5% ON THE CONNECTOR AND 10% ON LOWER NEWTON ROAD.

1.2.2 DRAINAGE, WATERWAYS, BODIES OF WATER, AND PROXIMITY TO NATURAL OR MAN-MADE WATER FEATURES

THE PROJECT FALLS INTO THE WATERSHEDS OF STEVENS AND RUGG BROOK. BOTH ARE ON THE VERMONT IMPAIRED SURFACE WATER LIST 303(d).

STEVENS BROOK IS HEAVILY CHANNELIZED WITH ROCK AND CONCRETE WALLS AS IT FLOWS THROUGH DOWNTOWN ST. ALBANS. THE STREAMBED HAS A WIDE GRADATION FROM LARGE BOULDERS TO VERY SMALL FINES. THE SLOPE OF THE STREAM IN THE VICINITY OF THE BRIDGE REPLACEMENT IS VERY FLAT (~0.5%)

THE NASON CONNECTOR AND A PORTION OF LEMNAH ON THE SOUTHERN PORTION OF THE PROJECT FLOWS TO RUGG BROOK. RUGG BROOK FLOWS THROUGH THE RESIDENTIAL LAND USE WEST OF STEVENS BROOK AND EVENTUALLY TO LAKE CHAMPLAIN.

1.2.3 VEGETATION

VEGETATION IN THE AREA IS LIMITED TO THE AREA WHERE THE NASON CONNECTOR WILL BE CONSTRUCTED AND THE WEST SIDE OF LEMNAH DRIVE IN THE LOCATION OF WHERE THE NEW ALIGNMENT AND REPLACEMENT CULVERT WILL BE CONSTRUCTED. IN BOTH OF THESE LOCATIONS, THE VEGETATION IS MOSTLY HARDWOOD TREES WITH DENSE UNDERGROWTH. IN EACH OF THESE LOCATIONS THE UNDER GROWN IS ALSO LITTERED WITH TRASH WHICH WILL NEED TO BE DISPOSED OF. DISTURBED VEGETATION WILL BE REESTABLISHED WITH STANDARD SEED AND MULCH PRACTICES.

1.2.4 SOILS

ALL SOIL DATA CAME FROM THE U.S. DEPARTMENT OF AGRICULTURE NATURAL RESOURCE CONSERVATION SERVICE FOR THE COUNTY OF FRANKLIN, VERMONT.

SOILS ON THE PROJECT ARE AS FOLLOWS:

- COPAKE FINE SANDY LOAM: K=0.20
- MASSENA STONY LOAM: K=0.28
- RUMNEY VARIANT SILT LOAM: K=0.32
- GEORGIA STONY LOAM: K=0.28

ALL OF THESE SOILS HAVE A MODERATE EROSION POTENTIAL EXCEPT THE COPAKE LOAM WHICH IS LOW.

NOTE: K-VALUES GENERALLY INDICATE THE FOLLOWING:
0.0-0.23 = LOW EROSION POTENTIAL
0.24-0.36 = MODERATE EROSION POTENTIAL
0.37 AND HIGHER = HIGH EROSION POTENTIAL

1.2.5 SENSITIVE RESOURCE AREAS

CRITICAL HABITATS: NO
HISTORICAL AREAS: A PORTION OF THE PROJECT FALLS WITHIN THE ST. ALBANS HISTORIC DISTRICT BUT NO BUILDINGS ARE BEING EFFECTED.
ARCHEOLOGICAL AREAS: NO HIGH RISK ARCHEOLOGICAL AREAS WERE IDENTIFIED WITHIN THE PROJECT AREA.
PRIME AGRICULTURAL LAND: NO
THREATENED AND ENDANGERED SPECIES: NO
WATER RESOURCE: STEVENS BROOK AND RUGG BROOK, BOTH IMPAIRED WATERSHEDS ON THE IMPAIRED SURFACE WATERS LIST 303(D)
WETLANDS: TWO WETLANDS WERE IDENTIFIED IN THE VICINITY OF THE PROJECT AREA BOTH ON THE SOUTH WEST SIDE OF THE PROJECT NEAR THE NASON STREET CONNECTOR.

- WETLAND B: 32,300 SQ-FT REGULATED WETLAND
- WETLAND F: 2,930 SQ-FT NON-REGULATED WETLAND

1.3 RISK EVALUATION

CONTRACTOR ACTIVITIES SHALL ADHERE TO THESE PLANS, THE CONDITIONS OF THE INDIVIDUAL CONSTRUCTION STORMWATER DISCHARGE PERMIT (INDC), AND THE VERMONT STANDARDS & SPECIFICATIONS FOR EROSION PREVENTION & SEDIMENT CONTROL (2006, AMENDED 2008).

1.4 EROSION PREVENTION AND SEDIMENT CONTROL

THE EROSION CONTROL PLANS ARE MEANT AS A GUIDELINE FOR PREVENTING EROSION AND CONTROLLING SEDIMENT TRANSPORT. THE PRINCIPLES OUTLINED IN THIS NARRATIVE CONSIST OF APPLYING MEASURES THROUGHOUT CONSTRUCTION OF THE PROJECT IN ORDER TO MINIMIZE SEDIMENT TRANSPORT TO THE RECEIVING WATERS. THE MEASURES INCLUDE STABILIZATION AND STRUCTURAL PRACTICES, STORM WATER CONTROLS AND OTHER POLLUTION PREVENTION PRACTICES. THEY HAVE BEEN PROPOSED BY THE DESIGNER AS A BASIS FOR PROTECTING RESOURCES AND WILL NEED TO BE BUILT UPON BASED ON THE SPECIFIC MEANS AND METHODS OF THE CONTRACTOR.

CONTRACTOR ACTIVITIES SHALL ADHERE TO THESE PLANS, THE CONDITIONS OF THE INDIVIDUAL CONSTRUCTION STORMWATER DISCHARGE PERMIT (INDC), AND THE VERMONT STANDARDS & SPECIFICATIONS FOR EROSION PREVENTION & SEDIMENT CONTROL (2006, AMENDED 2008).

EPSC MEASURES SHALL BE INSTALLED PRIOR TO EARTH DISTURBING ACTIVITIES WITH THE EXCEPTION OF LAND DISTURBANCE THAT MAY RESULT FROM ACCESSING THE AREA(S) WITH EQUIPMENT IN ORDER TO INSTALL THOSE EPSC MEASURES. TEMPORARY EPSC MEASURES INTENDED TO TRAP SEDIMENT SHALL BE INSTALLED AS A FIRST STEP IN LAN DISTURBING ACTIVITIES AND SHALL BE MADE FUNCTIONAL BEFORE UPSLOPE LAND DISTURBANCE TAKES PLACE, WITH THE EXCEPTION OF THOSE LAND DISTURBING ACTIVITIES THAT ARE NECESSARY TO INSTALL THE MEASURES.

1.4.1 EPSC SPECIALIST OVERSIGHT

THE EPSC SPECIALIST DESIGNATED TO THE PROJECT SHALL:

a. BE RESPONSIBLE FOR PERFORMING ENVIRONMENTAL INSPECTIONS AND REPORTING AT A FREQUENCY PURSUANT TO THE CONSTRUCTION STORMWATER DISCHARGE PERMIT ISSUED FOR THE PROJECT.
b. BE RESPONSIBLE FOR ASSESSING THE SITE TO ENSURE COMPLIANCE WITH THE EPSC PLAN AND DIRECTING CORRECTIVE ACTION AS NEEDED.
c. NOTIFY THE OSPC WHEN CHANGES IN PRACTICE ARE NEEDED TO COMPLY WITH THE EPSC PLAN.
   AND
d. DETERMINE/CONFIRM/REPORT THAT APPROPRIATE EPSC PLAN MODIFICATIONS ARE BEING MADE AND RECORDED AS NECESSARY.

THE EPSC SPECIALIST SHALL NOT BE THE OSPC.

EPSC SPECIALIST INSPECTIONS SHALL BE DOCUMENTED USING AN INSPECTION REPORT FOR THAT HAS BEEN APPROVED IN WRITING BY VT DEC.

EPSC SPECIALIST INSPECTIONS SHALL INCLUDE A REVIEW OF THE OSPC'S INSPECTION REPORTS.

EPSC SPECIALIST INSPECTION REPORTS SHALL BE SUBMITTED TO VT DEC AT A FREQUENCY PURSUANT TO THE CONSTRUCTION STORMWATER DISCHARGE PERMIT, AS WELL AS BEING MAINTAINED ON-SITE FOR THE DURATION OF THE PROJECT AND MADE AVAILABLE TO VT DEC UPON REQUEST.

1.4.2 ON-SITE PLAN COORDINATOR (OSPC)

UNDER THE INDC, A FULL TIME ON-SITE PLAN COORDINATOR (OSPC) IS REQUIRED. THE OSPC MUST BE KNOWLEDGEABLE OF EPSC PRACTICES AND IS RESPONSIBLE FOR THE ON-SITE IMPLEMENTATION OF THE EPSC PLAN.

THE OSPC DESIGNATED TO THE PROJECT (AND HIS/HER DESIGNEE) SHALL:

a. REVIEW VT DEC'S "ON-SITE PLAN COORDINATOR MANUAL."
b. BE ON-SITE ON A DAILY BASIS (OR HAVE A DESIGNEE THAT IS ON-SITE WHEN HE/SHE CANNOT BE).
c. BE DIRECTLY RESPONSIBLE FOR ON-SITE IMPLEMENTATION OF THE EPSC PLAN.
d. BE KNOWLEDGEABLE IN THE PRINCIPLES AND PRACTICES OF EPSC.
e. POSSESS THE SKILLS AND EQUIPMENT TO ASSESS CONDITIONS AT THE CONSTRUCTION SITE THAT COULD IMPACT STORMWATER QUALITY.
f. POSSESS THE SKILLS TO ASSESS THE EFFECTIVENESS OF EPSC MEASURES SELECTED TO CONTROL THE QUALITY OF STORMWATER DISCHARGES FROM CONSTRUCTION ACTIVITY.
g. POSSESS THE SKILLS AND EQUIPMENT TO CONDUCT TURBIDITY MONITORING PURSUANT TO THE CONSTRUCTION STORMWATER DISCHARGE PERMIT.
   AND
h. HAVE THE AUTHORITY TO STOP AND/OR MODIFY CONSTRUCTION ACTIVITIES AS NECESSARY TO COMPLY WITH THE EPSC PLAN AND THE CONSTRUCTION STORMWATER DISCHARGE PERMIT.

ALL PROPOSED CHANGES TO THE EPSC PLAN MUST BE APPROVED BY THE OSPC OR HIS/HER DESIGNEE, THE PLAN DESIGNER OR A CERTIFIED PROFESSIONAL IN EROSION AND SEDIMENT CONTROL (CPESC_ PRIOR TO IMPLEMENTATION, AND BE CONSIDERED MINOR AMENDMENTS AS DEFINED IN THE OSPC HANDBOOK. ALL MINOR AMENDMENTS ARE TO BE RECORDED USING THE MINOR AMENDMENT RECORD FORM AND MARKED ON THE MASTER OSPC PLANSET. ALL MODIFICATIONS THAT FALL OUTSIDE OF THE MINOR AMENDMENT DEFINITION MUST BE APPROVED BY THE VT DEC.

DURING THE REGULAR CONSTRUCTION SEASON (APRIL 12 TO OCT 15), THE OSPC OR HIS/HER DESIGNEE SHALL CONDUCT INSPECTIONS AT LEAST ONCE EVERY SEVEN (7) CALENDAR DAYS AND WITHIN 24 HOURS FOLLOWING A STORM EVENT RESULTING IN DISCHARGE OF STORMWATER FROM THE CONSTRUCTION SITE.

DURING THE WINTER CONSTRUCTION SEASON (OCT 15 TO APRIL 15), THE OSPC OR HIS/HER DESIGNEE SHALL CONDUCT INSPECTIONS ON A DAILY BASIS DURING ACTIVE EARTHWORK.

THE OSPC AND HIS/HER DESIGNEE(S) SHALL FOLLOW TURBIDITY MONITORING PROTOCOLS OUTLINED IN THE VT DEC'S "MONITORING OF TURBIDITY IN STORMWATER RUNOFF FROM CONSTRUCTION ACTIVITIES" MANUAL.

INSPECTIONS CONDUCTED BY THE OSPC OR HIS/HER DESIGNEE SHALL COVER ALL AREAS OF THE SITE THAT ARE BEING ACTIVELY DISTURBED BY CONSTRUCTION OR CONSTRUCTION RELATED ACTIVITIES, INCLUDING AREAS THAT HAVE BEEN TEMPORARILY STABILIZED.

OSPC INSPECTIONS SHALL BE DOCUMENTED USING THE VT DEC INSPECTION REPORT FOR OR A VT DEC ACCEPTED INSPECTION REPORT FORM.

OSPC INSPECTION REPORTS SHALL BE MAINTAINED ON-SITE FOR THE DURATION OF THE PROJECT AND MADE AVAILABLE TO VT DEC UPON REQUEST.

1.4.3 INSPECTION REQUIREMENTS

INSPECTIONS SHALL BE CONDUCTED AT LEAST ONCE EVERY SEVEN (7) CALENDAR DAYS, WITH ADDITIONAL INSPECTION FREQUENCY REQUIRED FOR RAIN EVENT, WINTER CONSTRUCTION, AND VISIBLE DISCHARGES PER THE CONDITIONS OF PART 6 OF THE GENERAL PERMIT. A WRITTEN REPORT SHALL BE COMPLETED FOR EACH INSPECTION AND SIGNED BY THE OSPC. ALL REPORTS ARE TO BE MAINTAINED ON-SITE AND MADE AVAILABLE TO STATE DEC REPRESENTATIVES UPON REQUEST. AN OSPC INSPECTION REPORT FOR PROJECTS UNDER INDIVIDUAL DISCHARGE PERMIT CAN BE FOUND ON THE VERMONT DEC WEBSITE AT http://www.vtwaterquality.org/stormwater/docs/construction/sw_INDC-OSPC-Inspection%20Form.doc

1.4.4 MARK SITE BOUNDARIES

CONSTRUCTION DEMARCATION AND PERIMETER CONTROLS SHALL COMPLY WITH THE FOLLOWING:

CONSTRUCTION DEMARCATION:

a. CONSTRUCTION DEMARCATION TO BE INSTALLED ALONG PERIMETER OF LIMITS OF DISTURBANCE PER THE EPSC PLAN.
b.

1.4.5 LIMIT DISTURBANCE AREA

PREVENTING INITIAL SOIL EROSION BY MINIMIZING THE EXPOSED AREA IS MUCH MORE EFFECTIVE THAN TREATING ERODED SEDIMENT. EARTH DISTURBANCE CAN BE MINIMIZED THROUGH CONSTRUCTION PHASING BY ONLY OPENING UP EARTH AS NECESSARY. THIS CAN LIMIT THE AREA THAT WILL BE DISTURBED AND EXPOSED TO EROSION. EMPLOY TEMPORARY CONSTRUCTION STABILIZATION PRACTICES IN INCREMENTAL STAGES AS PHASES CHANGE. FOR PROJECTS WHICH FALL UNDER THE CONSTRUCTION GENERAL PERMIT, ONLY THE ACREAGE LISTED ON THE PERMIT AUTHORIZATION MAY BE EXPOSED AT ANY GIVEN TIME.

MAINTAINING VEGETATED BUFFERS ALONG STREAM BANKS, WETLANDS OR OTHER SENSITIVE AREAS IS A CRUCIAL EROSION AND SEDIMENT CONTROL MEASURE THAT SHOULD BE ESTABLISHED WHEREVER POSSIBLE.

1.4.6 SITE ENTRANCE/EXIT STABILIZATION
TRACKING OF SEDIMENT ONTO PUBLIC HIGHWAYS SHALL BE MINIMIZED TO REDUCE THE POTENTIAL FOR RUNOFF ENTERING RECEIVING WATERS. INSTALLATION SHALL COINCIDE WITH THE CONTRACTORS PROGRESS SCHEDULE.

STABILIZED CONSTRUCTION ENTRANCES SHALL BE INSTALLED AS PROPOSED ON THE EPSC PLAN AND ANYWHERE EQUIPMENT WILL BE GOING FROM AREAS OF EXPOSED SOILS TO PAVED SURFACES.

STABILIZED CONSTRUCTION ENTRANCES SHALL BE MAINTAINED REGULARLY TO CONTROL EQUIPMENT AND VEHICLES FROM TRACKING MATERIAL OFFSITE AND ONTO ROADWAYS.

SWEEPING OF ROADWAYS WILL BE CONDUCTED AS NEEDED TO PREVENT TRANSPORTATION OF SEDIMENT FROM THE SITE.

1.4.7 INSTALL SEDIMENT BARRIERS
SEDIMENT BARRIERS SHALL BE UTILIZED TO INTERCEPT RUNOFF AND ALLOW SUSPENDED SEDIMENT TO SETTLE OUT. THEY SHALL BE INSTALLED PRIOR TO ANY UP SLOPE WORK.

SILT FENCE WILL BE INSTALLED AS PROPOSED ON THE EPSC PLAN. WOVEN WIRE REINFORCED SILT FENCE SHALL BE USED INSTEAD OF SILT FENCE WITHIN 100 FEET UPSLOPE OF RECEIVING WATERS.

1.4.8 INSTALL STORM DRAIN INLET PROTECTION
ALL EXISTING AND PROPOSED STORMWATER INLETS IN THE CONSTRUCTION AREA SHALL HAVE INLET PROTECTION INSTALLED TO PREVENT SEDIMENT LADEN WATER FROM ENTERING A STORM DRAIN SYSTEM THROUGH INLETS.

SEDIMENT FROM STORMWATER ENTERING DRAIN INLET SHALL BE REDUCED BY PONDING OR PASSING THROUGH A SEMI-PERMEABLE FILTER PRIOR TO ENTERING A STORM SYSTEM.

STORM DRAIN INLET PROTECTION SHALL CONFORM TO ONE OF THE 4 TYPES DEPICTED IN THE VT DEC EPSC MANUAL AND CHOSEN BASED ON THE BEST SUITED FOR THE TYPE OF INLET.

FILTER FABRIC SHALL HAVE AN AOS OF 40-85.

DRAINAGE STONE SHALL BE CLEAN STONE OR GRAVEL UNIFORMLY SIZED FROM ½" TO ¾".

DRAINAGE AREA FOR A STORM DRAIN INLET SHALL NOT EXCEED ONE ACRE. THE CREST ELEVATIONS OF THESE PRACTICES SHALL PROVIDES STORAGE AM MINIMIZE BYPASS FLOW.

1.4.9 DIVERT UPLAND RUNOFF
DIVERSIONARY MEASURES SHALL BE USED TO INTERCEPT RUNOFF FROM ABOVE THE CONSTRUCTION AND DIRECT IT AROUND THE DISTURBED AREA SO THAT CLEAN WATER DOES NOT BECOME MUDDIED WHILE TRAVELING OVER EXPOSED SOILS ON THE CONSTRUCTION SITE.

1.4.10 CONSTRUCT PERMANENT CONTROLS
PERMANENT STORMWATER TREATMENT DEVICES SHALL BE INSTALLED AS SHOWN ON THE PLANS AND IN ACCORDANCE WITH PERMIT CONDITIONS.

1.4.11 STABILIZE EXPOSED SOILS DURING CONSTRUCTION
ALL AREAS OF DISTURBANCE MUST HAVE TEMPORARY STABILIZATION IN PLACE WITHIN 48 HOURS OF DISTURBANCE OR IN ACCORDANCE WITH THE CONSTRUCTION GENERAL PERMIT 3-9020 AUTHORIZATION.

SURFACE ROUGHENING OF ALL EXPOSED SLOPES, COMBINED WITH TEMPORARY MULCHING, SHALL BE UTILIZED ON A REGULAR BASIS. BIODEGRADABLE EROSION CONTROL MATTING OR AN EQUIVALENT SHALL BE USED TO STABILIZE ALL SLOPES STEEPER THAN 1:3.

THE FORECAST OF RAINFALL EVENTS SHALL TRIGGER IMMEDIATE PROTECTION OF EXPOSED SOILS.

1.4.12 WINTER STABILIZATION
VARIOUS MEASURES SPECIFIC TO WINTER MAY BE NECESSARY SHOULD THE PROJECT EXTEND INTO WINTER (OCTOBER 15 THROUGH APRIL 15). REFER TO THE VERMONT STANDARDS & SPECIFICATIONS FOR EROSION & SEDIMENT CONTROL 2006 FOR GUIDANCE.

1.4.13 STABILIZE SOIL AT FINAL GRADE
EXPOSED SOIL MUST BE STABILIZED WITHIN 48 HOURS OF REACHING FINAL GRADE.

SEED, MULCH, FERTILIZER AND LIME SHALL BE USED TO ESTABLISH PERMANENT VEGETATION. FOR SLOPES STEEPER THAN 1:3, BIODEGRADABLE EROSION CONTROL MATTING OR AN EQUIVALENT SHALL BE USED INSTEAD OF MULCH.

1.4.14 DE-WATERING ACTIVITIES
DISCHARGE FROM DEWATERING ACTIVITIES THAT FLOWS OFF OF THE CONSTRUCTION SITE MUST NOT CAUSE OR CONTRIBUTE TO A VIOLATION OF THE VERMONT WATER QUALITY STANDARDS.

EFFLUENT FROM DEWATERING OPERATIONS SHALL BE FILTERED OR PASSED THROUGH A SEDIMENT TRAPPING DEVICE AND DISCHARGED IN A MATTER THAT DOES NOT RESULT IN IMPACTS TO WATER QUALITY OR CONTRIBUTE TO EROSION.

1.4.15 INSPECT YOUR SITE
INSPECT THE PROJECT SITE BASED ON SPECIAL PROVISION REQUIREMENTS OR CONSTRUCTION GENERAL PERMIT AUTHORIZATION STIPULATIONS.

1.5 SEQUENCE AND STAGING

THIS SECTION WILL BE DEVELOPED BY THE CONTRACTOR USING THE GUIDANCE OUTLINED IN THE VTRANS EPSC PLAN CONTRACTOR CHECKLIST.

1.5.1 CONSTRUCTION SEQUENCE

THE PROJECT HAS BEEN DIVIDED
INTO SIX PHASES OUTLINED BELOW:

- NASON STREET CONNECTOR: CONSTRUCTING THE NEW NASON STREET CONNECTOR AND ALSO INCLUDING APPROACH WORK ON MAIN STREET, THE I-89 ACCESS ROAD, NASON STREET, AND 250-FT NORTH ON LEMNAH DRIVE.
- LEMNAH DRIVE REALIGNMENT: FROM NASON TO THE SOUTH SIDE OF LOWER WELDEN STREET INCLUDING THE BRIDGE REPLACEMENT OVER STEVENS BROOK
- ALLEN STREET AND INTERSECTIONS: REALIGNMENT OF ALLEN ROAD INCLUDING THE LOWER WELDEN STREET AND MARKET/STEBBINS INTERSECTIONS AND APPROACH WORK
- MARKET, CATHERINE, LAKE STEBBINS, & FEDERAL STREET INTERSECTIONS: RECONSTRUCTION OF MARKET STREET, CATHERINE STREET, LAKE STREET, STEBBINS STREET, AND FEDERAL STREET NORTH TO KINGMAN STREET
- FEDERAL STREET REHABILITATION: REHABILITATION OF FEDERAL STREET FROM KINGMAN STREET TO LOWER NEWTON ROAD
- LOWER NEWTON ROAD REALIGNMENT: LOWER NEWTON ROAD VERTICAL REALIGNMENT INCLUDING THE LOWER NEWTON AND MAIN STREET INTERSECTION WORK

1.5.2 OFF-SITE ACTIVITIES

IN ADDITION TO THE CONTRACTOR CHECKLIST ANY ACTIVITIES OUTSIDE THE CONSTRUCTION LIMITS SHALL FOLLOW SPECIFICATION 105.25- 105.29 OF THE STANDARD SPECIFICATIONS FOR CONSTRUCTION.

BARRIER FENCE (LINE STYLE) 653.50	-BF-×-×-×-BF-
BRUSH LAYER 653.75, DETAIL	BL
CHECK DAM (LINE STYLE) 653.25, DETAIL	▸—▸—▸–
COFFERDAM (LINE STYLE) 208.40	
DUST CONTROL 609.10 & 15	DC
PIPE INLET PROTECTION 653.40, DETAIL	
EXCAVATED DROP INLET PROTECTION 653.40, DETAIL	
FIBER ROLL (EROSION LOG) 653.60, DETAIL	FR
FILTER BAG 653.45, DETAIL	
FILTER FABRIC DROP INLET PROTECTION 653.40, DETAIL	
PROJECT DEMARCATION FENCE (LINE STYLE) 653.55	-PDF——PDF-
ROLLED EROSION CONTROL PRODUCT (RECP) 653.20 (TEMP. EROSION MATTING)	
SILT FENCE(LINE STYLE) 649.51, DETAIL	
SILT FENCE WOVEN WIRE(LINE STYLE) 649.515, DETAIL	

ADAPTED FROM DETAILS PROVIDED BY: NEW YORK STATE DEC
ORIGINALLY DEVELOPED BY USDA-NRCS
VERMONT DEPARTMENT OF ENVIRONMENTAL CONSERVATION

STANDARD SYMBOLS

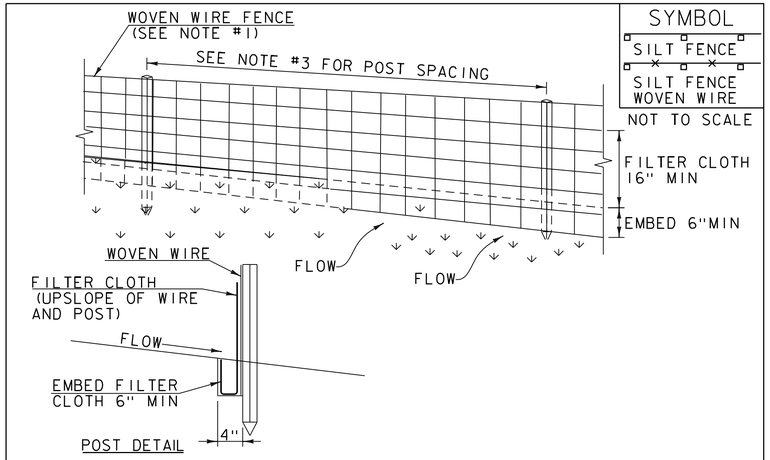

SYMBOL
SILT FENCE
SILT FENCE WOVEN WIRE
NOT TO SCALE

CONSTRUCTION SPECIFICATIONS

1. WOVEN WIRE REINFORCED FENCE IS REQUIRED WITHIN 100' UPSLOPE OF RECEIVING WATERS WHEN THE PROJECT FALLS UNDER A CONSTRUCTION STORMWATER PERMIT. WOVEN WIRE SHALL BE A MIN. 14 GAUGE WITH A 6" MAX. MESH OPENING.
2. FILTER CLOTH SHALL BE EITHER FILTER X, MIRAFI100X, STABILINKA T140N OR APPROVED EQUIVALENT.
3. POST SPACING FOR WIRE-BACKED FENCE SHALL BE 10' MAXIMUM. FOR FILTER-CLOTH FENCE, WHEN ELONGATION IS >50%, POST SPACING SHALL NOT EXCEED 4' AND WHEN ELONGATION IS <50%, POST SPACING SHALL NOT EXCEED 6'.
4. WOVEN WIRE FENCE IS TO BE FASTENED SECURELY TO FENCE POSTS WITH WIRE TIES. FILTER CLOTH IS TO BE FASTENED SECURELY TO WOVEN WIRE FENCE WITH TIES SPACED EVERY 24" AT TOP AND MID SECTION.
5. WHEN TWO SECTIONS OF FILTER CLOTH ADJOIN EACH OTHER THEY SHALL BE OVER-LAPPED BY 6" AND FOLDED.
6. MAINTENANCE SHALL BE PERFORMED AS NEEDED AND MATERIAL REMOVED WHEN SEDIMENT REACHES HALF OF FABRIC HEIGHT.

ADAPTED FROM DETAILS PROVIDED BY: NEW YORK STATE DEC
ORIGINALLY DEVELOPED BY USDA-NRCS
VERMONT DEPARTMENT OF ENVIRONMENTAL CONSERVATION

SILT FENCE

NOTES:
REFER TO "THE VERMONT STANDARDS & SPECIFICATIONS FOR EROSION PREVENTION & SEDIMENT CONTROL -2006- "FROM THE VT AGENCY OF NATURAL RESOURCES FOR ADDITIONAL GUIDANCE.

THIS WORK SHALL BE PERFORMED IN ACCORDANCE WITH SECTION 649 AND AS SHOWN IN THE PLANS FOR GEOTEXTILE FOR SILT FENCE (PAY ITEM 649.51) ~~OR GEOTEXTILE FOR SILT FENCE, WOVEN WIRE REINFORCED (PAY ITEM 649.515).~~

REVISIONS	
MARCH 21, 2008	WHF
DECEMBER 11, 2008	WHF
JANUARY 13, 2009	WHF

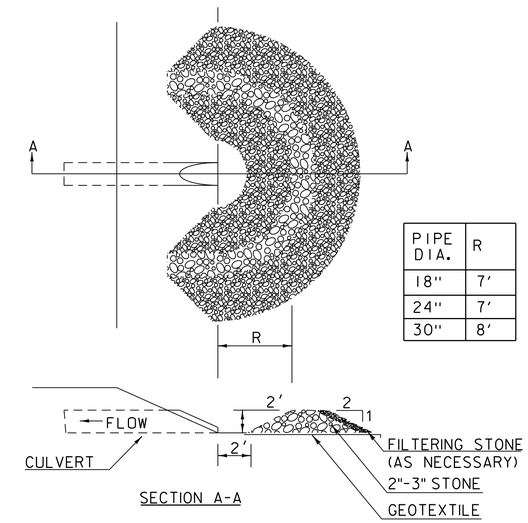

PIPE DIA.	R
18"	7'
24"	7'
30"	8'

SYMBOL
NOT TO SCALE

CONSTRUCTION SPECIFICATIONS

1. USE 2" TO 3" STONE. FILTERING STONE SHALL BE 3/4".
2. PLACE STONE OVER GEOTEXTILE.
3. ONCE THE AREAS UPSTREAM FROM THE CHECK DAM ARE STABILIZED WITH VEGETATION, THE SEDIMENT TRAPPED BEHIND THE DAM SHALL BE DISPOSED OF IN AN APPROVED WASTE AREA.
4. THE CHECK DAM(S) SHALL BE FLATTENED AND GRADED IN A MANNER WHICH PROTECTS THE AREA FROM EROSION AND CHANNEL BLOCKAGE . (GEOTEXTILE MUST BE REMOVED).
5. THE GEOTEXTILE MUST BE DISPOSED OF APPROPRIATELY.
6. THE AREA CONTRIBUTING TO THE CHECK DAM SHALL NOT EXCEED 4 ACRES.

ADAPTED FROM DETAILS PROVIDED BY: ILLINOIS USDA-NRCS
ORIGINALLY DEVELOPED BY USDA-NRCS

PIPE INLET PROTECTION

THIS WORK SHALL BE PERFORMED IN ACCORDANCE WITH SECTION 653 FOR INLET PROTECTION DEVICE, TYPE I(PAY ITEM 653.40).

REVISIONS	
MARCH 6, 2008	WHF
JANUARY 13, 2009	WHF

vhb

PROJECT NAME: ST. ALBANS	
PROJECT NUMBER: HPP 8000(17)	
FILE NAME: 57414_EPSC-DET.dgn	PLOT DATE: 3/4/2016
PROJECT LEADER: J. D. SALADINO	DRAWN BY: C. J. HAKEY
DESIGNED BY: M. KEENE	CHECKED BY: M. J. SERVETAS
EPSC DETAILS (SHEET 1 OF 3)	SHEET 129 OF 230

SYMBOL

NOT TO SCALE

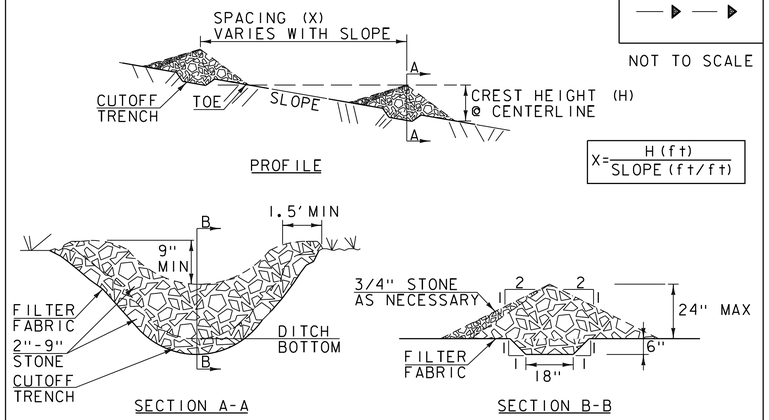

CONSTRUCTION SPECIFICATIONS

1. STONE WILL BE PLACED ON A FILTER FABRIC FOUNDATION.
2. CHECK DAMS SHALL BE SPACED SO THAT THE ELEVATION OF THE CREST OF THE DOWNSTREAM DAM IS AT THE SAME ELEVATION AS THE TOE OF THE UPSTREAM DAM.
3. 3/4" FILTERING STONE MAY BE ADDED TO THE FACE OF THE CHECK DAM AS NECESSARY.
4. EXTEND THE STONE A MINIMUM OF 1.5' BEYOND THE DITCH BANKS TO PREVENT CUTTING AROUND THE DAM.
5. PROTECT CHANNEL DOWNSTREAM OF THE LOWEST CHECK DAM FROM SCOUR AND EROSION WITH STONE OR LINER AS APPROPRIATE.
6. ENSURE THAT CHANNEL APPURTENANCES SUCH AS CULVERT ENTRANCES BELOW CHECK DAMS ARE NOT SUBJECT TO DAMAGE OR BLOCKAGE FROM DISPLACED STONE.
7. MAXIMUM DRAINAGE AREA 2 ACRES.

ADAPTED FROM DETAILS PROVIDED BY: NEW YORK STATE DEC
ORIGINALLY DEVELOPED BY USDA-NRCS
VERMONT DEPARTMENT OF ENVIRONMENTAL CONSERVATION

CHECK DAM

NOTES:
REFER TO "THE VERMONT STANDARDS & SPECIFICATIONS FOR EROSION PREVENTION & SEDIMENT CONTROL -2006- "FROM THE VT AGENCY OF NATURAL RESOURCES FOR ADDITIONAL GUIDANCE.

THIS WORK SHALL BE PERFORMED IN ACCORDANCE WITH SECTION 653 FOR TEMPORARY STONE CHECK DAM, TYPE I (PAY ITEM 653.25)

REVISIONS	
MARCH 21, 2008	WHF
JANUARY 8, 2009	WHF

SYMBOL

NOT TO SCALE

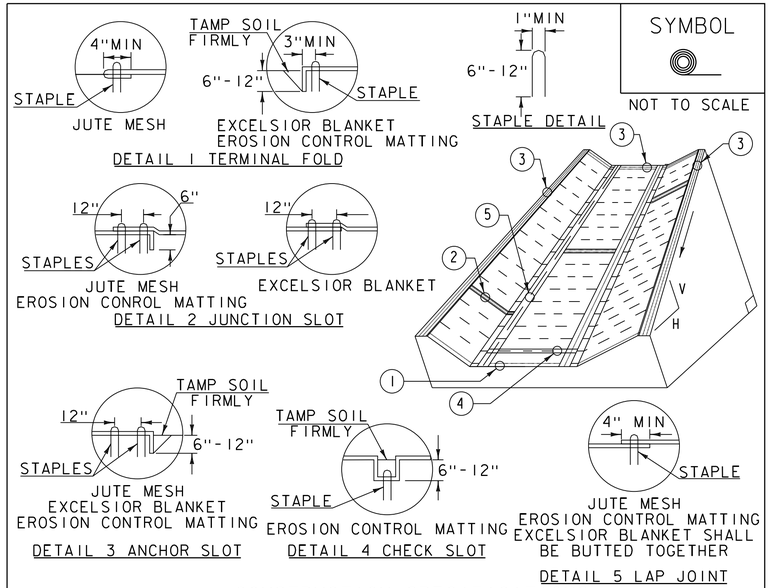

CONSTRUCTION SPECIFICATIONS

1. EROSION MATTING, CHECK SLOTS, SHALL BE SPACED IN DITCH CHANNEL SO THAT ONE OCCURS WITHIN EACH 50' ON SLOPES OF MORE THAN 4% AND LESS THAN 6%. ON SLOPES OF 6% OR MORE, THEY SHALL BE SPACED SO THAT ONE OCCURS WITHIN EACH 25'.
2. APPLY FERTILIZER, LIME SEED PRIOR TO PLACING MATTING.
3. STAPLES ARE TO BE PLACED ALTERNATELY, IN COLUMNS APPROXIMATELY 2' APART AND IN ROWS APPROXIMATELY 3' APART. APPROXIMATELY 175 STAPLES ARE REQUIRED PER 4'X225' ROLL OF MATERIAL AND 125 STAPLES ARE REQUIRED PER 4'X150' ROLL OF MATERIAL.
4. DISTURBED AREAS SHALL BE SMOOTHLY GRADED. EROSION CONTROL MATERIAL SHALL BE PLACED LOOSELY OVER GROUND SURFACE. DO NOT STRETCH.
5. ALL TERMINAL ENDS AND TRANSVERSE LAPS SHALL BE STAPLED AT APPROXIMATELY 12" INTERVALS.

ADAPTED FROM DETAILS PROVIDED BY: NEW YORK STATE DEC
ORIGINALLY DEVELOPED BY USDA-NRCS
VERMONT DEPARTMENT OF ENVIRONMENTAL CONSERVATION

ROLLED EROSION CONTROL PRODUCT (RECP) DITCH

NOTES:
REFER TO "THE VERMONT STANDARDS & SPECIFICATIONS FOR EROSION PREVENTION & SEDIMENT CONTROL -2006- "FROM THE VT AGENCY OF NATURAL RESOURCES FOR ADDITIONAL GUIDANCE.
THIS WORK SHALL BE PERFORMED IN ACCORDANCE WITH SECTION 653 AND AS SHOWN IN THE PLANS FOR TEMPORARY EROSION MATTING (PAY ITEM 653.20) ~~OR PERMANENT EROSION MATTING (PAY ITEM 653.21)~~.

REVISIONS	
MARCH 8, 2007	JMF
APRIL 16, 2007	WHF
JANUARY 13, 2009	WHF

SYMBOL

NOT TO SCALE

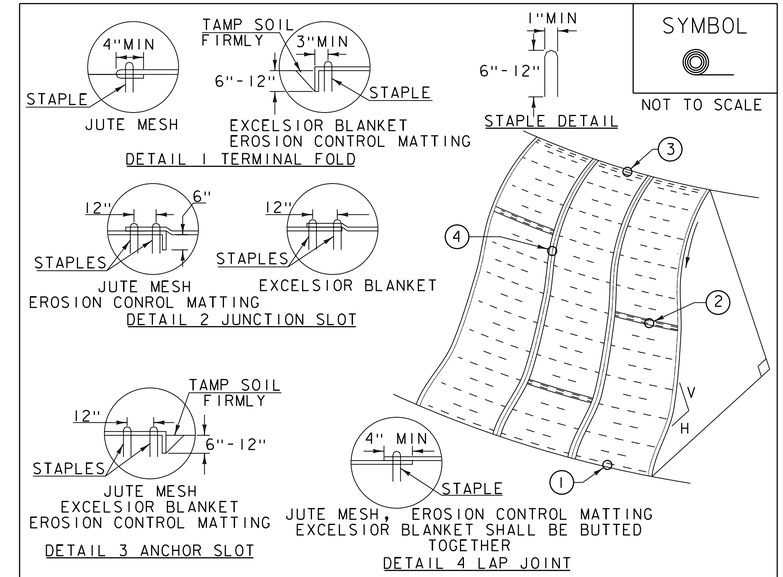

CONSTRUCTION SPECIFICATIONS

1. APPLY TO SLOPES GREATER THAN 3H:1V OR WHERE NECESSARY TO AID IN ESTABLISHING VEGETATION.
2. APPLY FERTILIZER, LIME SEED PRIOR TO PLACING MATTING.
3. STAPLES ARE TO BE PLACED ALTERNATELY, IN COLUMNS APPROXIMATELY 2' APART AND IN ROWS APPROXIMATELY 3' APART. APPROXIMATELY 175 STAPLES ARE REQUIRED PER 4'X225' ROLL OF MATERIAL AND 125 STAPLES ARE REQUIRED PER 4'X150' ROLL OF MATERIAL.
4. DISTURBED AREAS SHALL BE SMOOTHLY GRADED. EROSION CONTROL MATERIAL SHALL BE PLACED LOOSELY OVER GROUND SURFACE. DO NOT STRETCH.
5. ALL TERMINAL ENDS AND TRANSVERSE LAPS SHALL BE STAPLED AT APPROXIMATELY 12" INTERVALS.

ADAPTED FROM DETAILS PROVIDED BY: NEW YORK STATE DEC
ORIGINALLY DEVELOPED BY USDA-NRCS
VERMONT DEPARTMENT OF ENVIRONMENTAL CONSERVATION

ROLLED EROSION CONTROL PRODUCT (RECP) SIDE SLOPE

NOTES:
REFER TO "THE VERMONT STANDARDS & SPECIFICATIONS FOR EROSION PREVENTION & SEDIMENT CONTROL -2006- "FROM THE VT AGENCY OF NATURAL RESOURCES FOR ADDITIONAL GUIDANCE.
THIS WORK SHALL BE PERFORMED IN ACCORDANCE WITH SECTION 653 AND AS SHOWN IN THE PLANS FOR TEMPORARY EROSION MATTING (PAY ITEM 653.20) ~~OR PERMANENT EROSION MATTING (PAY ITEM 653.21)~~.

REVISIONS	
APRIL 16, 2007	JMF
JANUARY 13, 2009	WHF

vhb

PROJECT NAME: ST. ALBANS
PROJECT NUMBER: HPP 8000(17)

FILE NAME: 57414_EPSC-DET.dgn
PROJECT LEADER: J. D. SALADINO
DESIGNED BY: M. KEENE
EPSC DETAILS (SHEET 2 OF 3)

PLOT DATE: 3/4/2016
DRAWN BY: C. J. HAKEY
CHECKED BY: M. J. SERVETAS
SHEET 130 OF 230

SYMBOL

FR

NOT TO SCALE

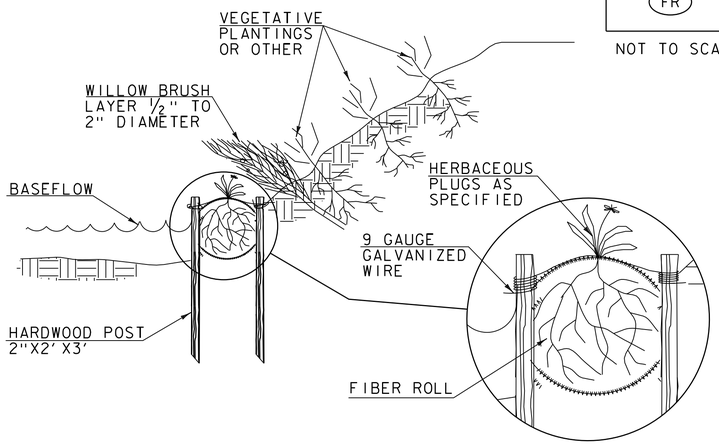

CONSTRUCTION SPECIFICATIONS

1. EXCAVATE A SHALLOW TRENCH SLIGHTLY BELOW BASEFLOW OR A 4" TRENCH ON SLOPE CONTOURS
2. PLACE THE ROLL IN THE TRENCH AND ANCHOR WITH 2"X2" POSTS PLACED ON BOTH SIDES FO THE ROLL AND SPACED LATERALLY ON 2' TO 4' CENTERS. TRIM THE TOP OF THE POSTS EVEN WITH THE EDGE OF THE ROLL, IF NECESSARY.
3. NOTCH THE POSTS AND TIE TOGETHER, ACROSS THE ROLL, WITH 9 GAUGE GALVANIZED WIRE OR 1/8" DIAMETER BRAIDED NYLON ROPE.
4. PLACE SOIL EXCAVATED FROM THE TRENCH BEHIND THE ROLL AND HAND TAMP. PLANTWITH SUITABLE HERBACEOUS OR WOODY VEGETATION AS SPECIFIED ELSEWHERE IN THE CONTRACT DOCUMENTS. VEGETATION SHALL BE PLACED IMMEDIATELY ADJACENT TO THE ROLL TO PROMOTE ROOT GROWTH INTO THE FIBER. HERBACEOUS VEGETATION, IF SPECIFIED, SHALL BE PLANTED INTO THE FIBER ROLL.

ADAPTED FROM DETAILS PROVIDED BY: NEW YORK STATE DEC
ORIGINALLY DEVELOPED BY USDA-NRCS
VERMONT DEPARTMENT OF ENVIRONMENTAL CONSERVATION

FIBER ROLL (EROSION LOG)

NOTES:
REFER TO "THE VERMONT STANDARDS & SPECIFICATIONS FOR EROSION PREVENTION & SEDIMENT CONTROL -2006- "FROM THE VT AGENCY OF NATURAL RESOURCES FOR ADDITIONAL GUIDANCE.

THIS WORK SHALL BE PERFORMED IN ACCORDANCE WITH SECTION 653 FOR EROSION LOG (PAY ITEM 653.60)

REVISIONS	
MARCH 21, 2008	WHF
JANUARY 13, 2009	WHF

SYMBOL

NOT TO SCALE

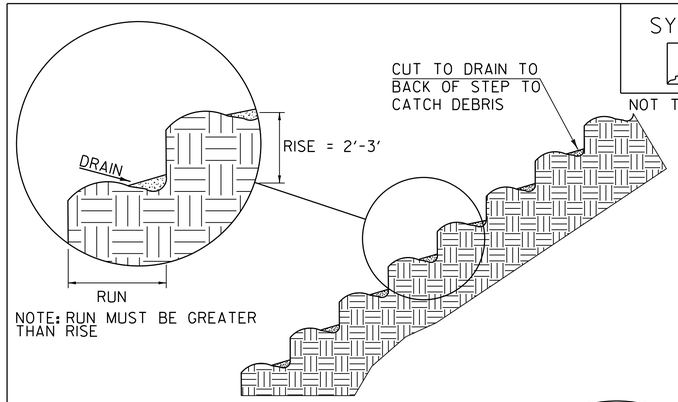

NOTE: RUN MUST BE GREATER THAN RISE

STAIR STEPPING CUT SLOPES

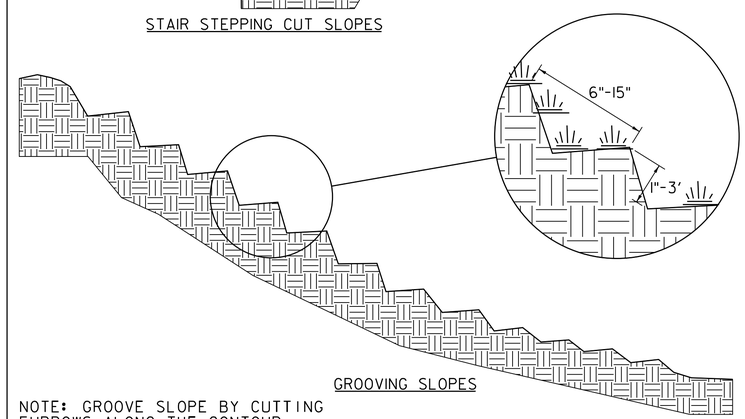

GROOVING SLOPES

NOTE: GROOVE SLOPE BY CUTTING FURROWS ALONG THE CONTOUR. IRREGULARITIES IN THE SOIL SURFACE CATCH RAINWATER AND RETAIN LIME, FERTILIZER AND SEED.

ADAPTED FROM DETAILS PROVIDED BY: NEW YORK STATE DEC
ORIGINALLY DEVELOPED BY USDA-NRCS
VERMONT DEPARTMENT OF ENVIRONMENTAL CONSERVATION

SURFACE ROUGHENING

NOTES:
REFER TO "THE VERMONT STANDARDS & SPECIFICATIONS FOR EROSION PREVENTION & SEDIMENT CONTROL -2006- "FROM THE VT AGENCY OF NATURAL RESOURCES FOR ADDITIONAL GUIDANCE.

THIS WORK SHALL BE CONSIDERED INCIDENTAL TO THE CONTRACT

REVISIONS	
APRIL 1, 2008	WHF
JANUARY 13, 2009	WHF

VAOT RURAL AREA MIX

	LBS/AC				
% WEIGHT	BROADCAST	HYDROSEED	NAME	GERM %	PURITY %
37.5%	22.5	45	CREEPING RED FESCUE	85%	98%
37.5%	22.5	45	TALL FESCUE	90%	95%
5.0%	3	6	RED TOP	90%	95%
15.0%	9	18	BIRDSFOOT TREFOIL	85%	98%
5.0%	3	6	ANNUAL RYE GRASS	85%	95%
100%	60	120			

VAOT URBAN AREA MIX

	LBS/AC				
% WEIGHT	BROADCAST	HYDROSEED	NAME	GERM %	PURITY %
42.5%	34	68	CREEPING RED FESCUE	85%	98%
10.0%	8	16	PERENNIAL RYE GRASS	90%	95%
42.5%	34	68	KENTUCKY BLUE GRASS	85%	85%
5.0%	4	8	ANNUAL RYE GRASS	85%	95%
100%	80	160			

SOIL AMENDMENT GUIDANCE

FERTILIZER		LIME	
BROADCAST	HYDROSEED	BROADCAST	HYDROSEED
10-20-10	*FOLLOW*	PELLETIZED	*FOLLOW*
500 LBS/AC	*MANUFACTURER*	2 TONS/AC	*MANUFACTURER*

CONSTRUCTION GUIDANCE

1. RURAL SEED MIX: USE AS INDICATED IN THE PLANS AND/OR FOR ALL ESTABLISHED UPLAND (NON WETLAND) AREAS DISTURBED BY THE CONTRACTOR.
2. URBAN SEED MIX: USE AS INDICATED IN THE PLANS AND/OR FOR ALL ESTABLISHED LAWN AREAS DISTURBED BY THE CONTRACTOR.
3. ALL SEED MIXTURES: SHALL NOT HAVE A WEED CONTENT EXCEEDING 0.40% BY WEIGHT AND SHALL BE FREE OF ALL NOXIOUS SEED.
4. FERTILIZER AND LIMESTONE: SHALL FOLLOW RATES SHOWN ON PLAN OR AS DIRECTED BY THE ENGINEER
5. HAY MULCH: TO BE PLACED ON EARTH SLOPES AT THE RATE OF 2 TONS/ACRE, ACHIEVE 90% GROUND COVER OR AS DIRECTED BY THE ENGINEER.
6. TOPSOIL: TO BE USED WITH SEED AS INDICATED ON THE PLANS, OR AS DIRECTED BY THE ENGINEER.
7. HYDROSEEDING: ALTHOUGH GUIDANCE IS GIVEN ABOVE THE SITE CONDITIONS AND THE TYPE OF HYDROSEED WILL ULTIMATELY DICTATE THE AMOUNTS AND TYPES OF SOIL AMENDMENTS TO BE APPLIED
8. TURF ESTABLISHMENT: PLACING SEED, FERTILIZER, LIME AND MULCH PRIOR TO SEPTEMBER 15 AND AFTER APRIL 15 CAN BETTER ENSURE A VIGOROUS GROWTH OF GRASS.

ADAPTED FROM VTRANS TECHNICAL LANDSCAPE MANUAL FOR ROADWAYS AND TRANSPORTATION FACILITIES

TURF ESTABLISHMENT

REVISIONS	
JUNE 23, 2009	WHF
JANUARY 15, 2010	WHF
FEBRUARY 16, 2011	WHF

vhb

PROJECT NAME: ST. ALBANS
PROJECT NUMBER: HPP 8000(17)

FILE NAME: 57414_EPSC-DET.dgn
PROJECT LEADER: J. D. SALADINO
DESIGNED BY: M. KEENE
EPSC DETAILS (SHEET 3 OF 3)

PLOT DATE: 3/4/2016
DRAWN BY: C. J. HAKEY
CHECKED BY: M. J. SERVETAS
SHEET 131 OF 230

MATCHLINE STA. 101+85

STATION 100+22
BEGIN PROJECT
HPP 8000(17)

STA. 899+00
BEGIN APPROACH

Approximate Exist. R.O.W.

CONSTRUCTION
ENTRANCE

SOUTH MAIN ST. (ROUTE 7)

899+00 900+00 901+00 902+00 903+00 904+00

101 102

101+00

3002+00

3001+00

3000+00

STA. 904+25
END APPROACH

LEDGE
OUTCROP

INTERSTATE ACCESS ROUTE

STA. 3000+50
BEGIN APPROACH

VT STATE PLANE GRID

N

0 20 40
SCALE IN FEET

vhb

PROJECT NAME: ST. ALBANS	
PROJECT NUMBER: HPP 8000(17)	
FILE NAME: 57414_BDR_ero.dgn	PLOT DATE: 3/4/2016
PROJECT LEADER: M. A. COLGAN	DRAWN BY: A.J. GOUDREAU
DESIGNED BY: D. M. PECK	CHECKED BY: M.C. SCOTT
EPSC PLAN (1 OF 18)	SHEET 132 OF 230

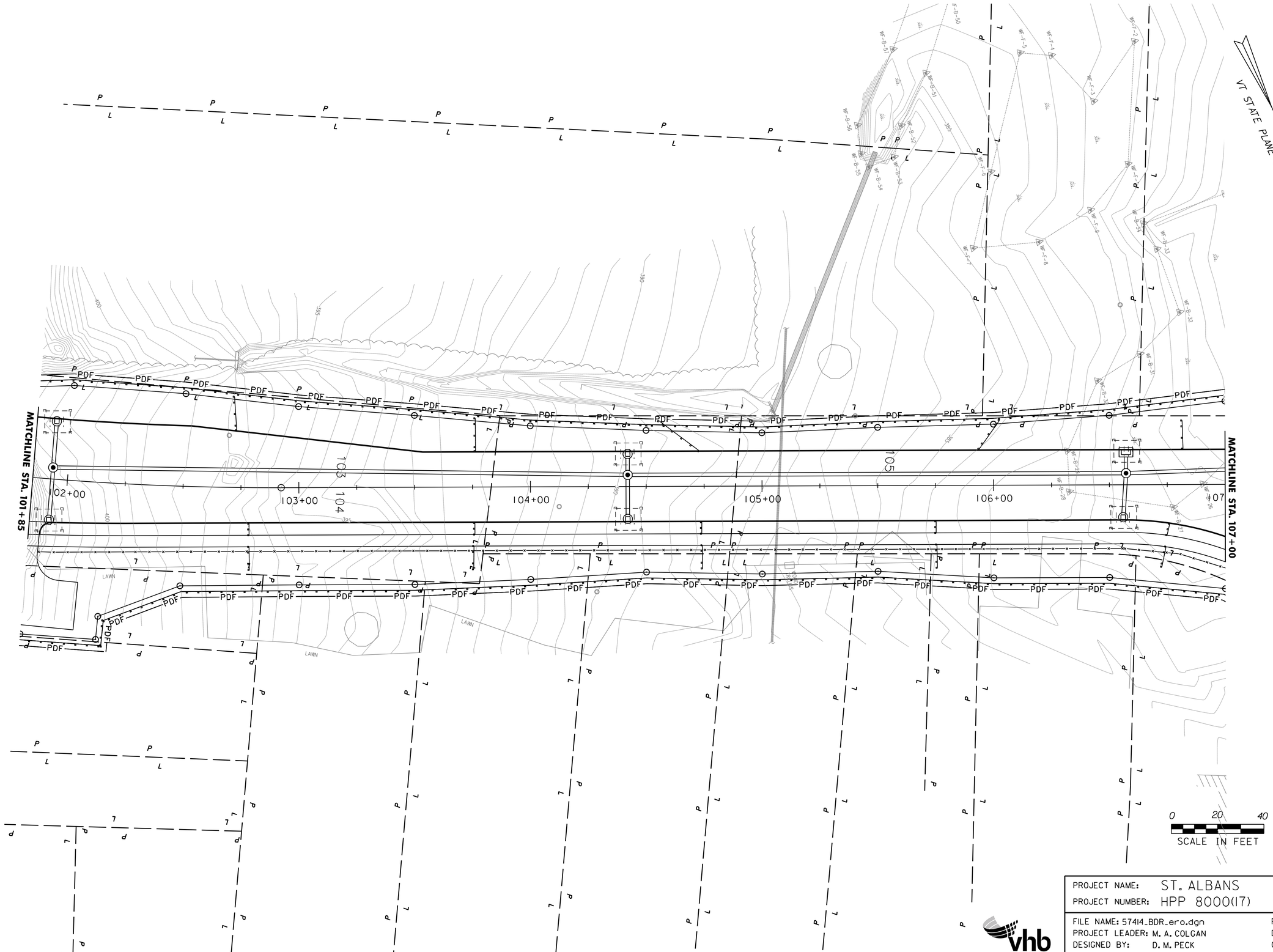

PROJECT NAME: ST. ALBANS
PROJECT NUMBER: HPP 8000(17)

FILE NAME: 57414_BDR_ero.dgn
PROJECT LEADER: M. A. COLGAN
DESIGNED BY: D. M. PECK
EPSC PLAN (2 OF 18)

PLOT DATE: 3/4/2016
DRAWN BY: A.J. GOUDREAU
CHECKED BY: M.C. SCOTT
SHEET 133 OF 230

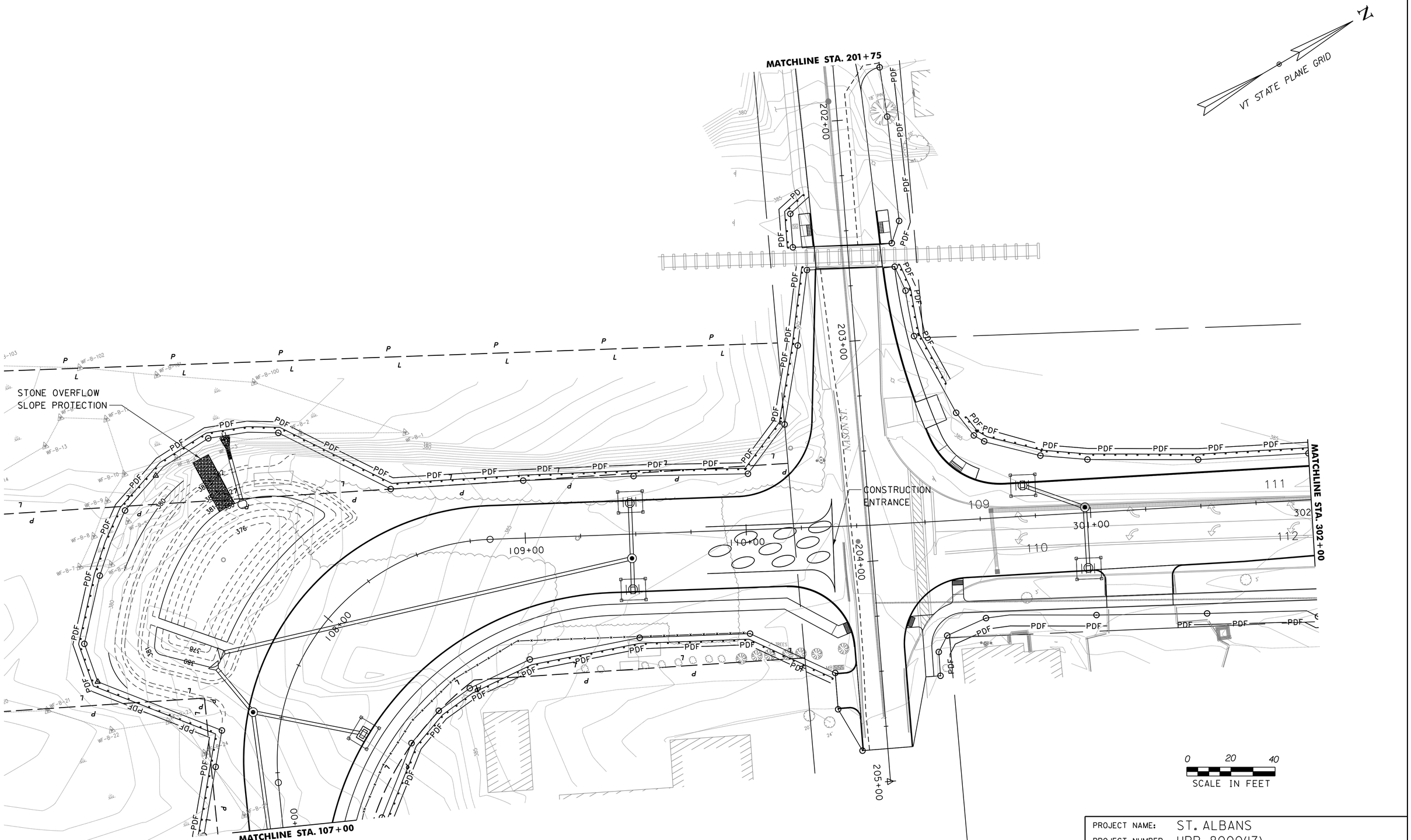

PROJECT NAME:	ST. ALBANS
PROJECT NUMBER:	HPP 8000(17)

FILE NAME: 57414_BDR_ero.dgn	PLOT DATE: 3/4/2016
PROJECT LEADER: M. A. COLGAN	DRAWN BY: A.J. GOUDREAU
DESIGNED BY: D. M. PECK	CHECKED BY: M.C. SCOTT
EPSC PLAN (3 OF 18)	SHEET 134 OF 230

VHB 57414.00

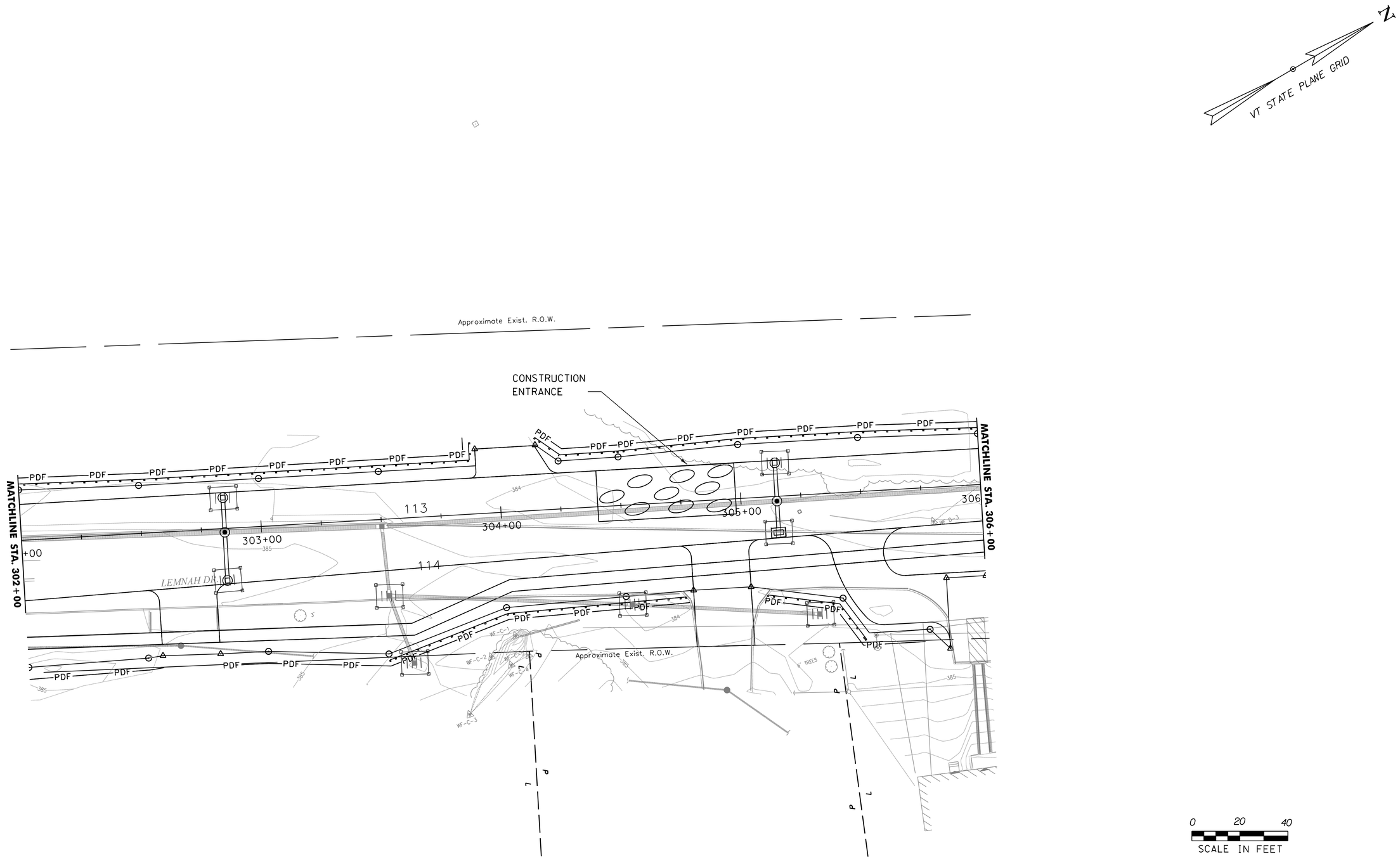

PROJECT NAME:	ST. ALBANS
PROJECT NUMBER:	HPP 8000(17)

FILE NAME: 57414_BDR_ero.dgn	PLOT DATE: 3/4/2016
PROJECT LEADER: M. A. COLGAN	DRAWN BY: A.J. GOUDREAU
DESIGNED BY: D. M. PECK	CHECKED BY: M.C. SCOTT
EPSC PLAN (4 OF 18)	SHEET 135 OF 230

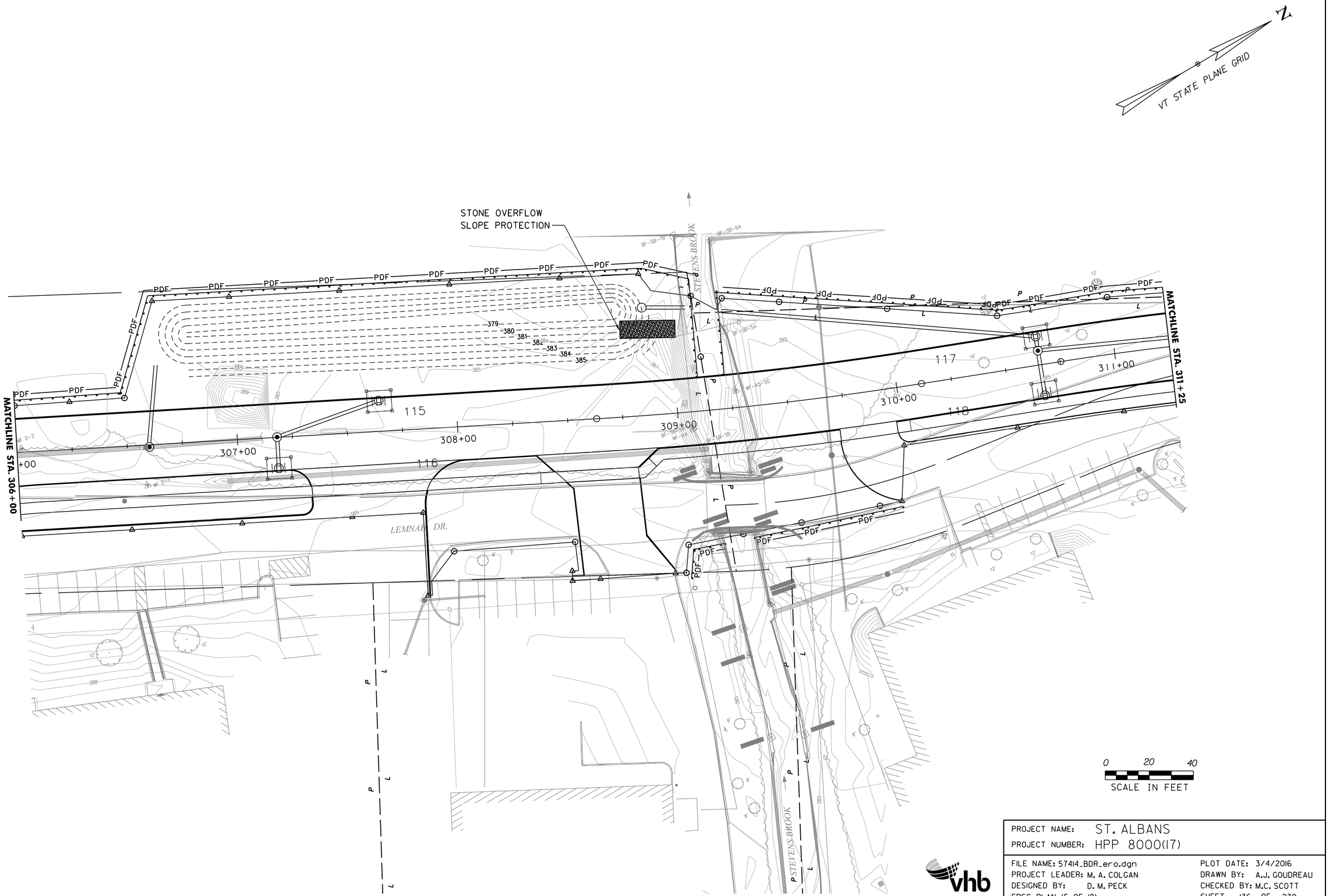

PROJECT NAME: ST. ALBANS	
PROJECT NUMBER: HPP 8000(17)	
FILE NAME: 57414_BDR_ero.dgn	PLOT DATE: 3/4/2016
PROJECT LEADER: M. A. COLGAN	DRAWN BY: A.J. GOUDREAU
DESIGNED BY: D. M. PECK	CHECKED BY: M.C. SCOTT
EPSC PLAN (5 OF 18)	SHEET 136 OF 230

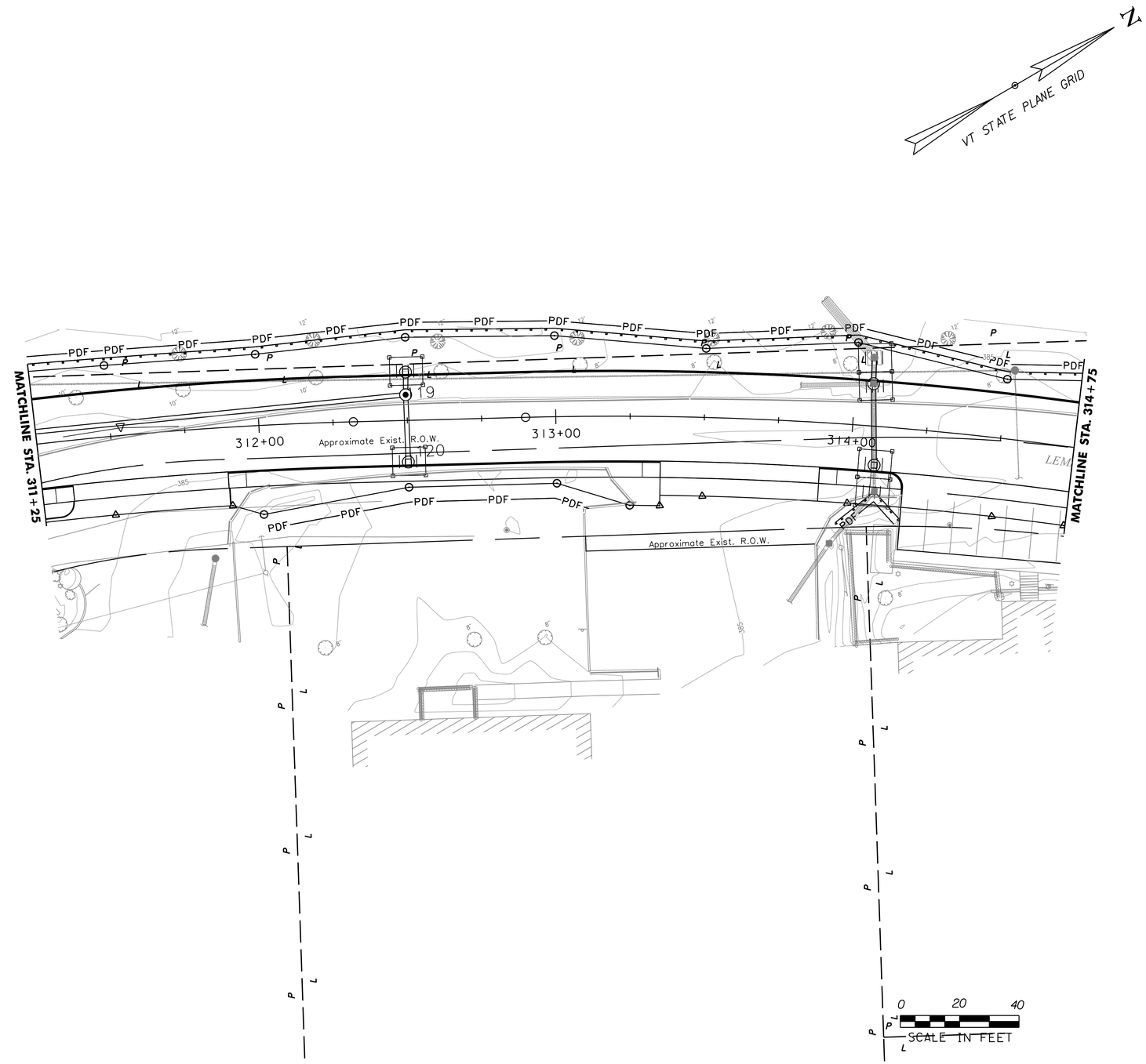

PROJECT NAME:	ST. ALBANS
PROJECT NUMBER:	HPP 8000(17)

FILE NAME: 57414_BDR_ero.dgn	PLOT DATE: 3/4/2016
PROJECT LEADER: M. A. COLGAN	DRAWN BY: A.J. GOUDREAU
DESIGNED BY: D. M. PECK	CHECKED BY: M.C. SCOTT
EPSC PLAN (6 OF 18)	SHEET 137 OF 230

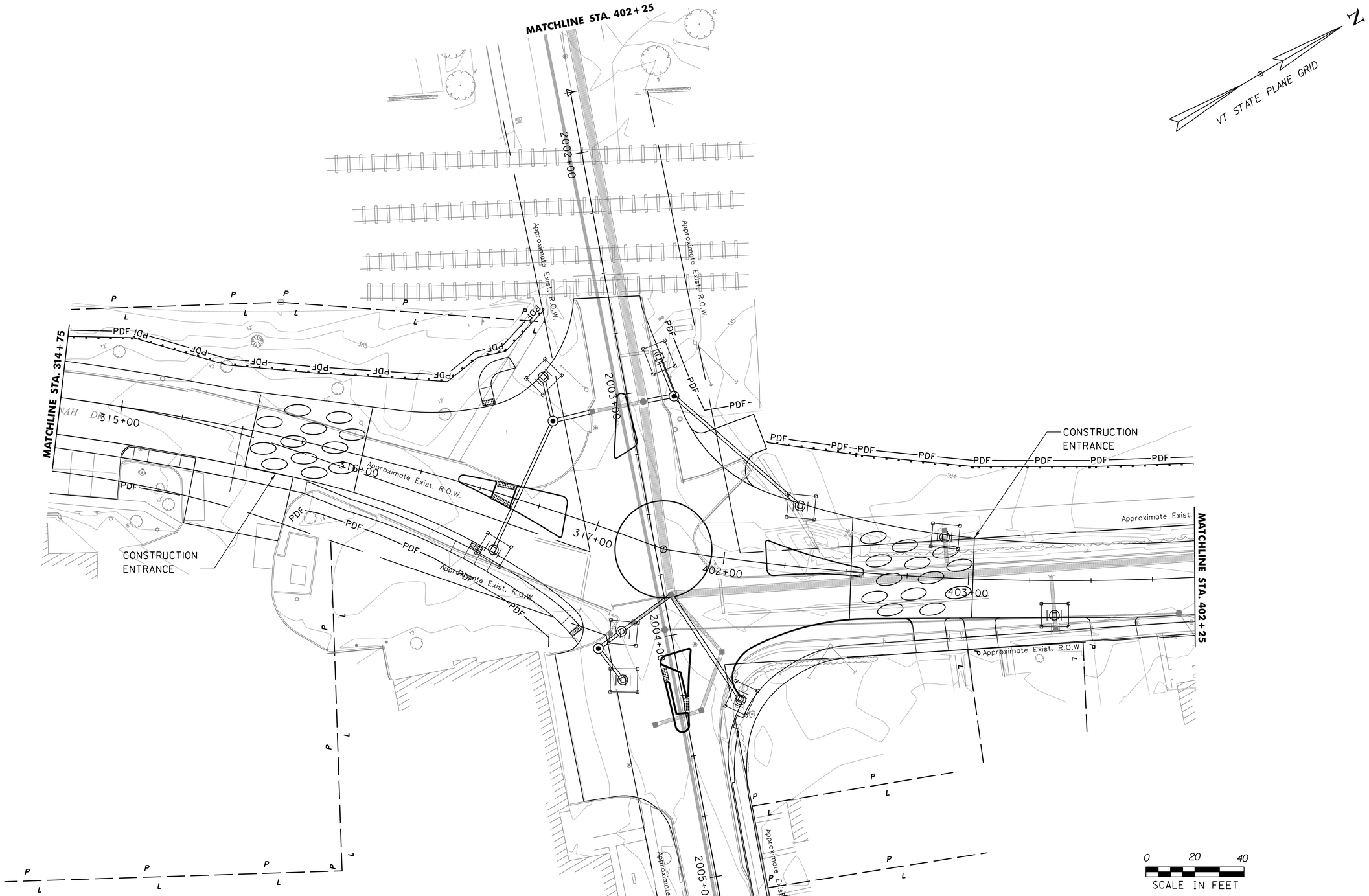

PROJECT NAME: ST. ALBANS	
PROJECT NUMBER: HPP 8000(17)	
FILE NAME: 57414_BDR_ero.dgn	PLOT DATE: 3/4/2016
PROJECT LEADER: M. A. COLGAN	DRAWN BY: A.J. GOUDREAU
DESIGNED BY: D. M. PECK	CHECKED BY: M.C. SCOTT
EPSC PLAN (7 OF 18)	SHEET 138 OF 230

VHB 57414.00

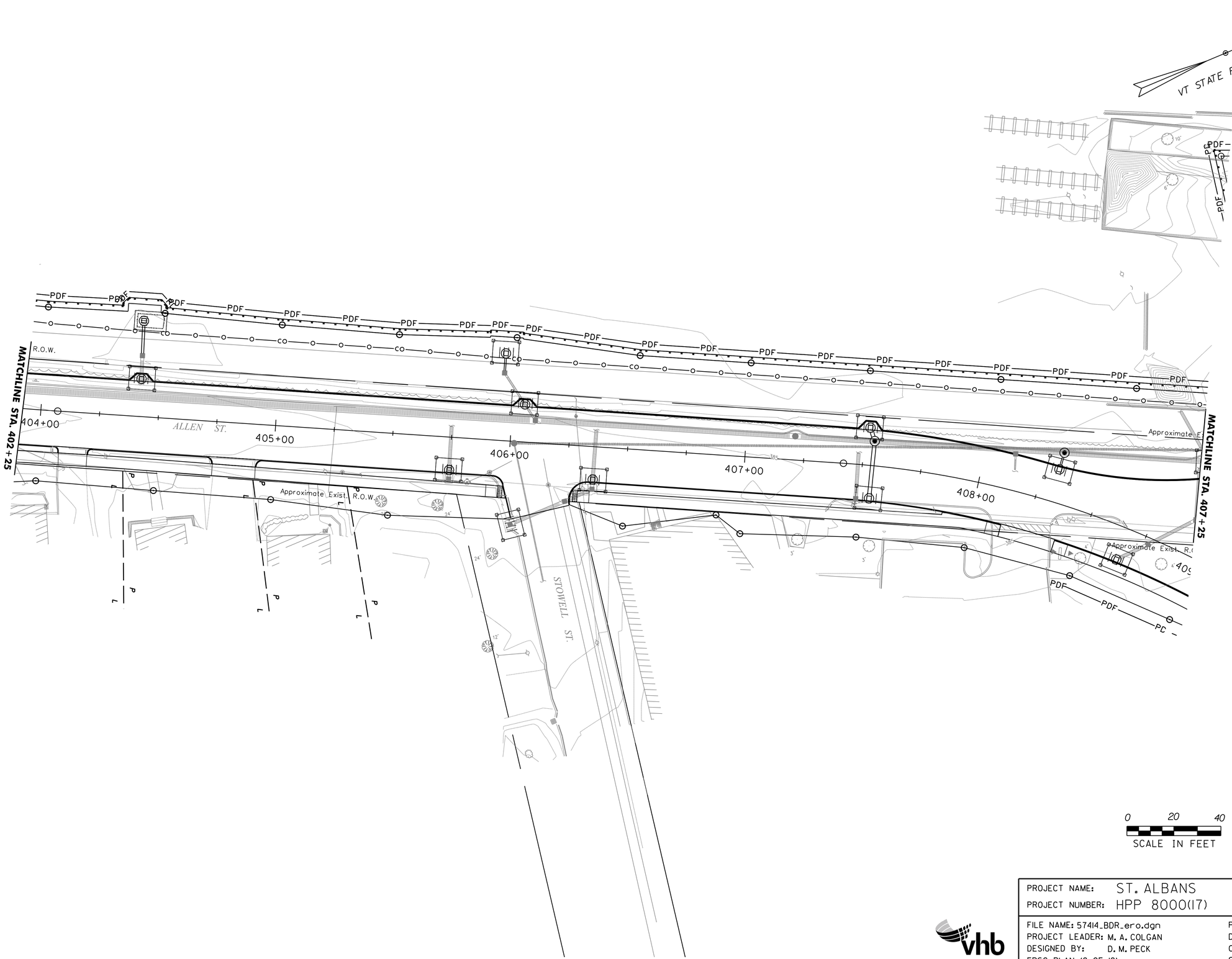

PROJECT NAME: ST. ALBANS	
PROJECT NUMBER: HPP 8000(17)	
FILE NAME: 57414_BDR_ero.dgn	PLOT DATE: 3/4/2016
PROJECT LEADER: M. A. COLGAN	DRAWN BY: A.J. GOUDREAU
DESIGNED BY: D. M. PECK	CHECKED BY: M.C. SCOTT
EPSC PLAN (8 OF 18)	SHEET 139 OF 230

VHB 57414.00

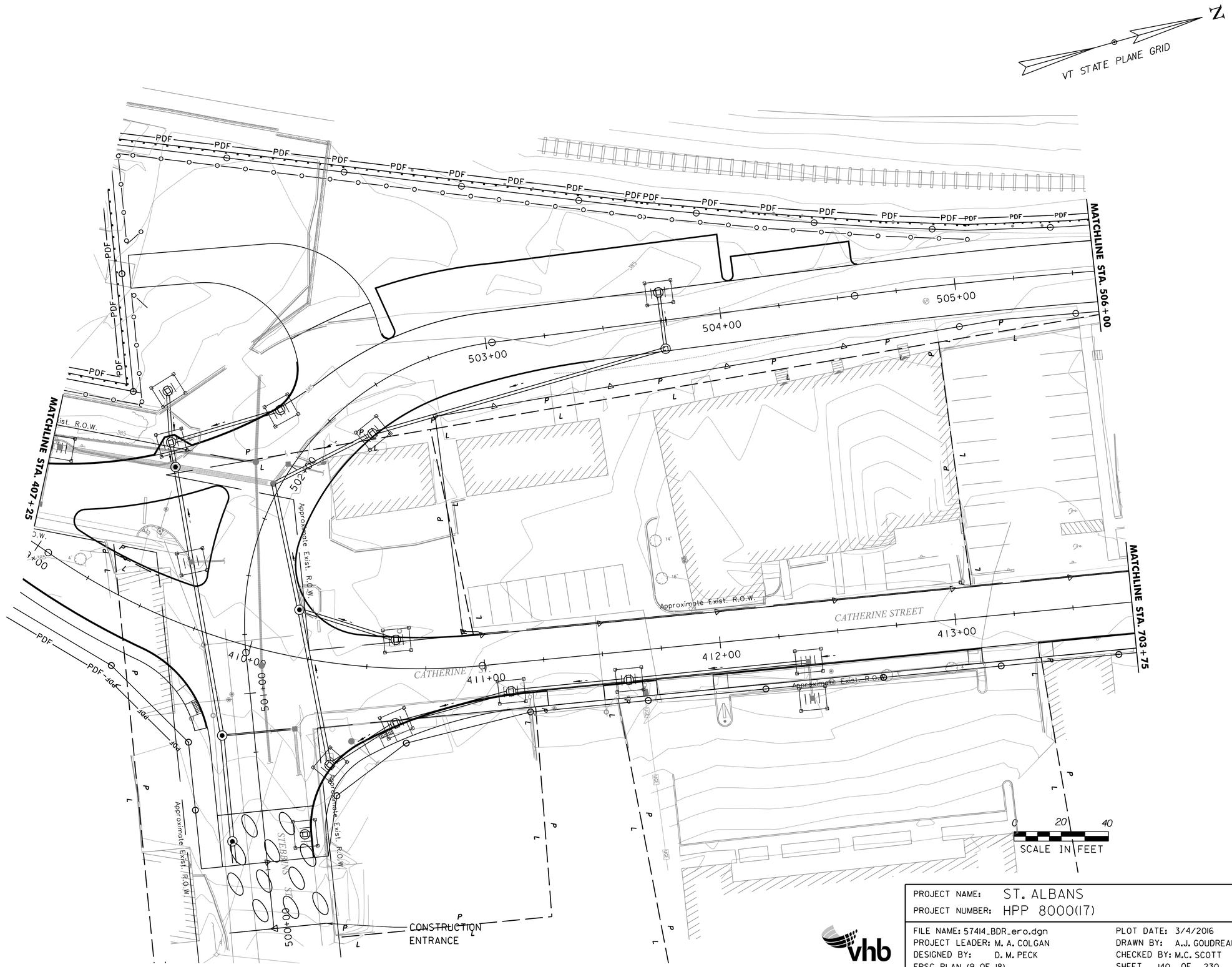

PROJECT NAME: ST. ALBANS	
PROJECT NUMBER: HPP 8000(17)	
FILE NAME: 57414_BDR_ero.dgn	PLOT DATE: 3/4/2016
PROJECT LEADER: M. A. COLGAN	DRAWN BY: A.J. GOUDREAU
DESIGNED BY: D. M. PECK	CHECKED BY: M.C. SCOTT
EPSC PLAN (9 OF 18)	SHEET 140 OF 230

VHB 57414.00

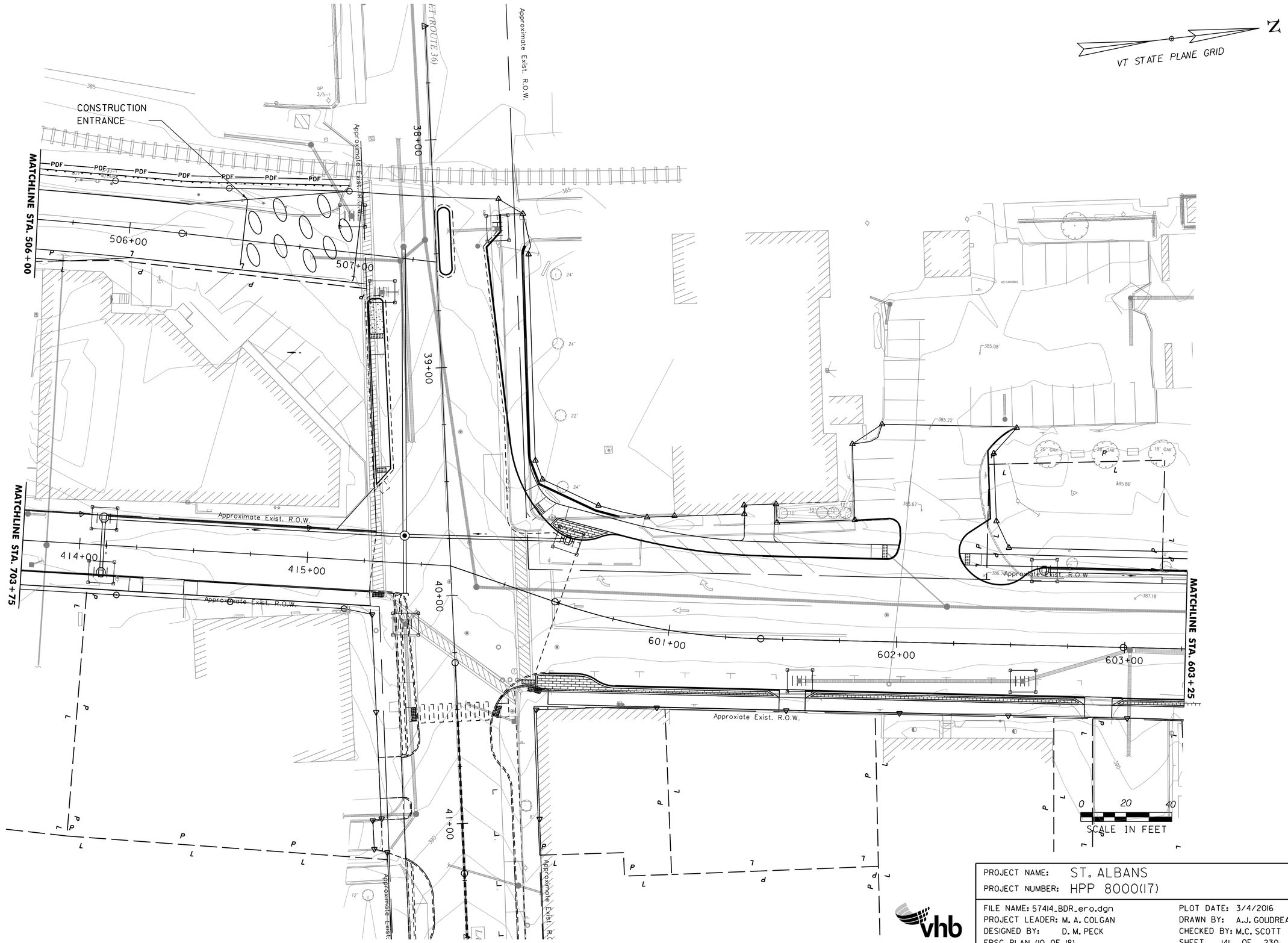

PROJECT NAME: ST. ALBANS	
PROJECT NUMBER: HPP 8000(17)	
FILE NAME: 57414_BDR_ero.dgn	PLOT DATE: 3/4/2016
PROJECT LEADER: M. A. COLGAN	DRAWN BY: A.J. GOUDREAU
DESIGNED BY: D. M. PECK	CHECKED BY: M.C. SCOTT
EPSC PLAN (10 OF 18)	SHEET 141 OF 230

VHB 57414.00

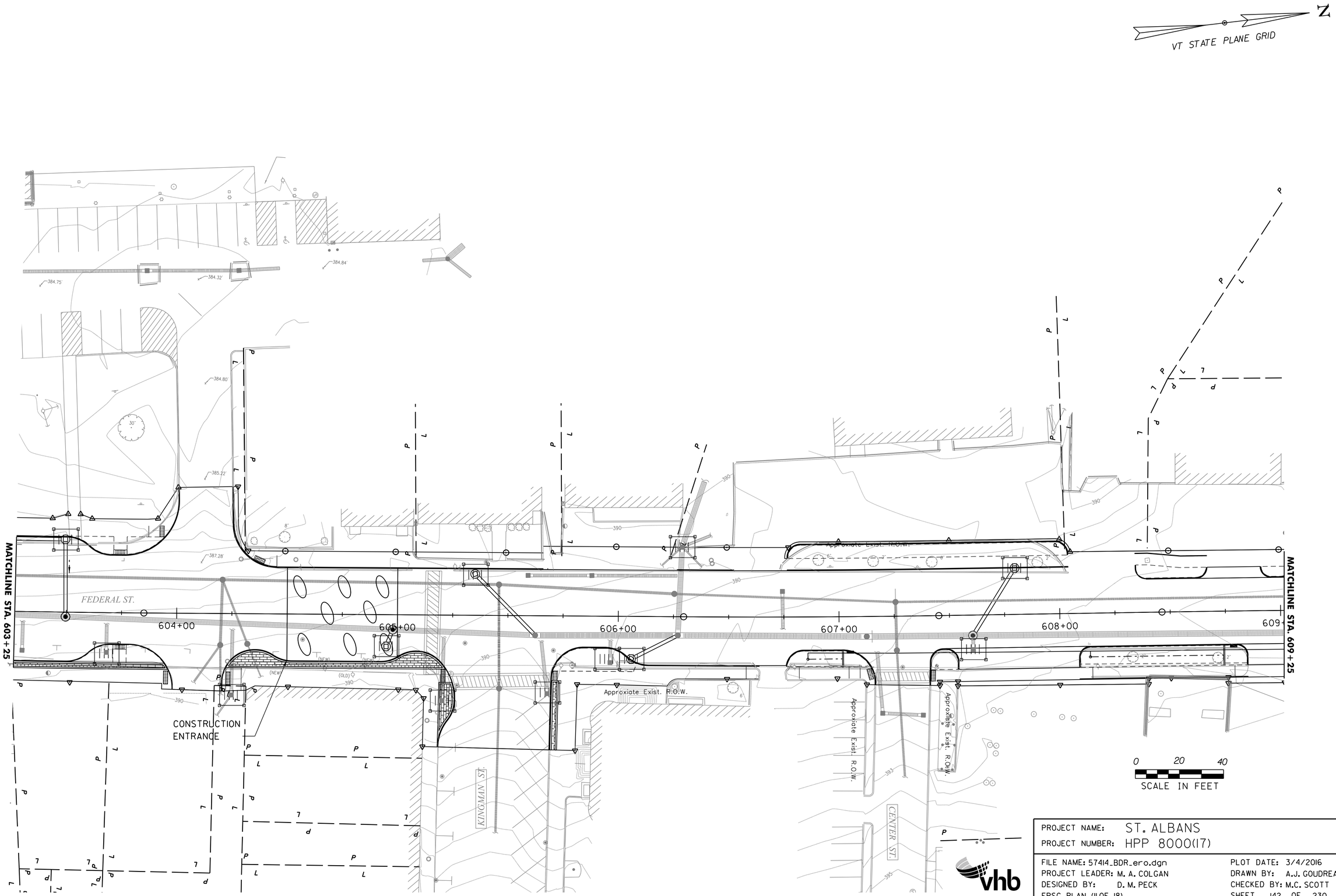

PROJECT NAME:	ST. ALBANS
PROJECT NUMBER:	HPP 8000(17)

FILE NAME: 57414_BDR_ero.dgn	PLOT DATE: 3/4/2016
PROJECT LEADER: M. A. COLGAN	DRAWN BY: A.J. GOUDREAU
DESIGNED BY: D. M. PECK	CHECKED BY: M.C. SCOTT
EPSC PLAN (11 OF 18)	SHEET 142 OF 230

VHB 57414.00

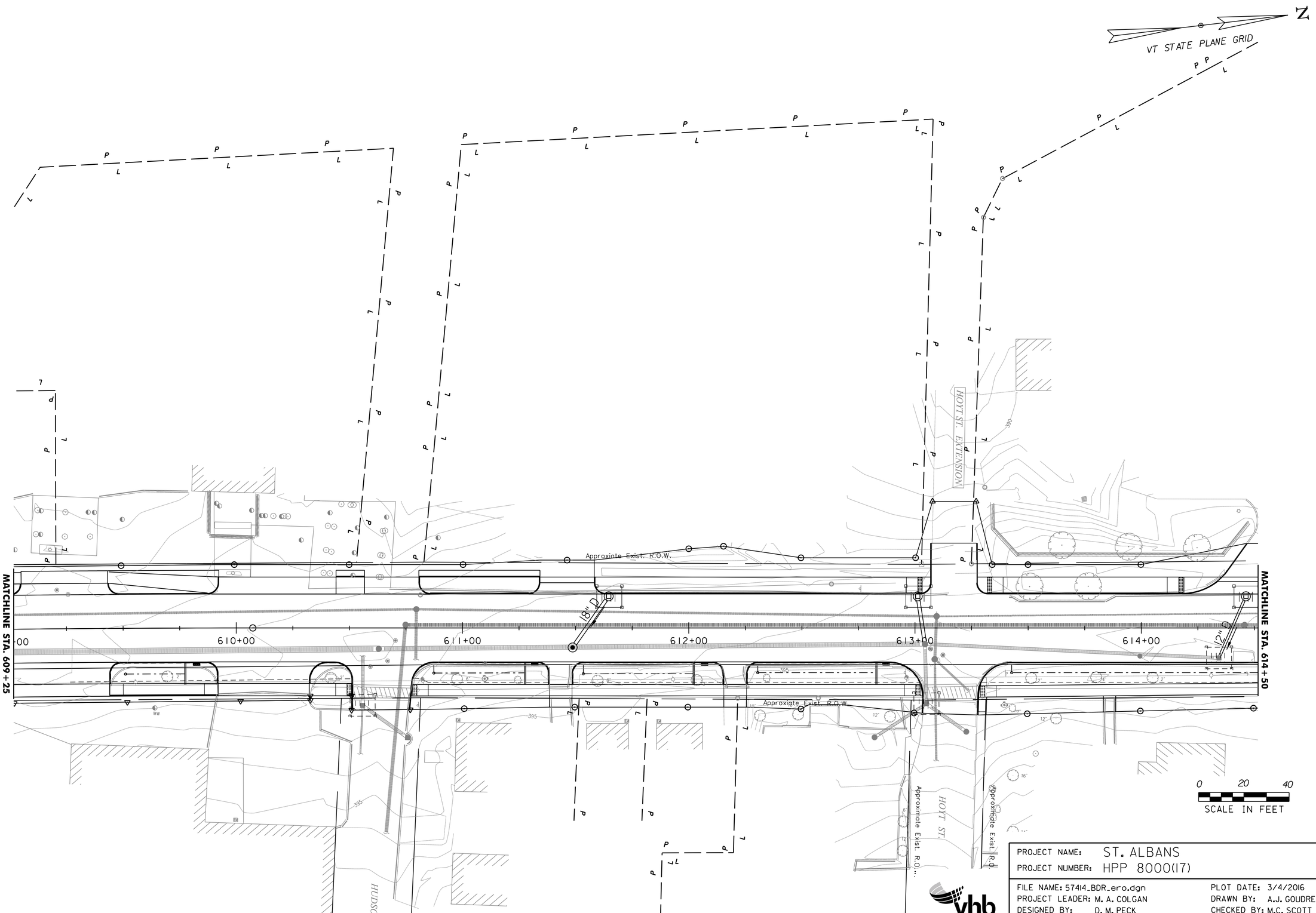

PROJECT NAME:	ST. ALBANS
PROJECT NUMBER:	HPP 8000(17)

FILE NAME: 57414_BDR_ero.dgn	PLOT DATE: 3/4/2016
PROJECT LEADER: M. A. COLGAN	DRAWN BY: A.J. GOUDREAU
DESIGNED BY: D. M. PECK	CHECKED BY: M.C. SCOTT
EPSC PLAN (12 OF 18)	SHEET 143 OF 230

VHB 57414.00

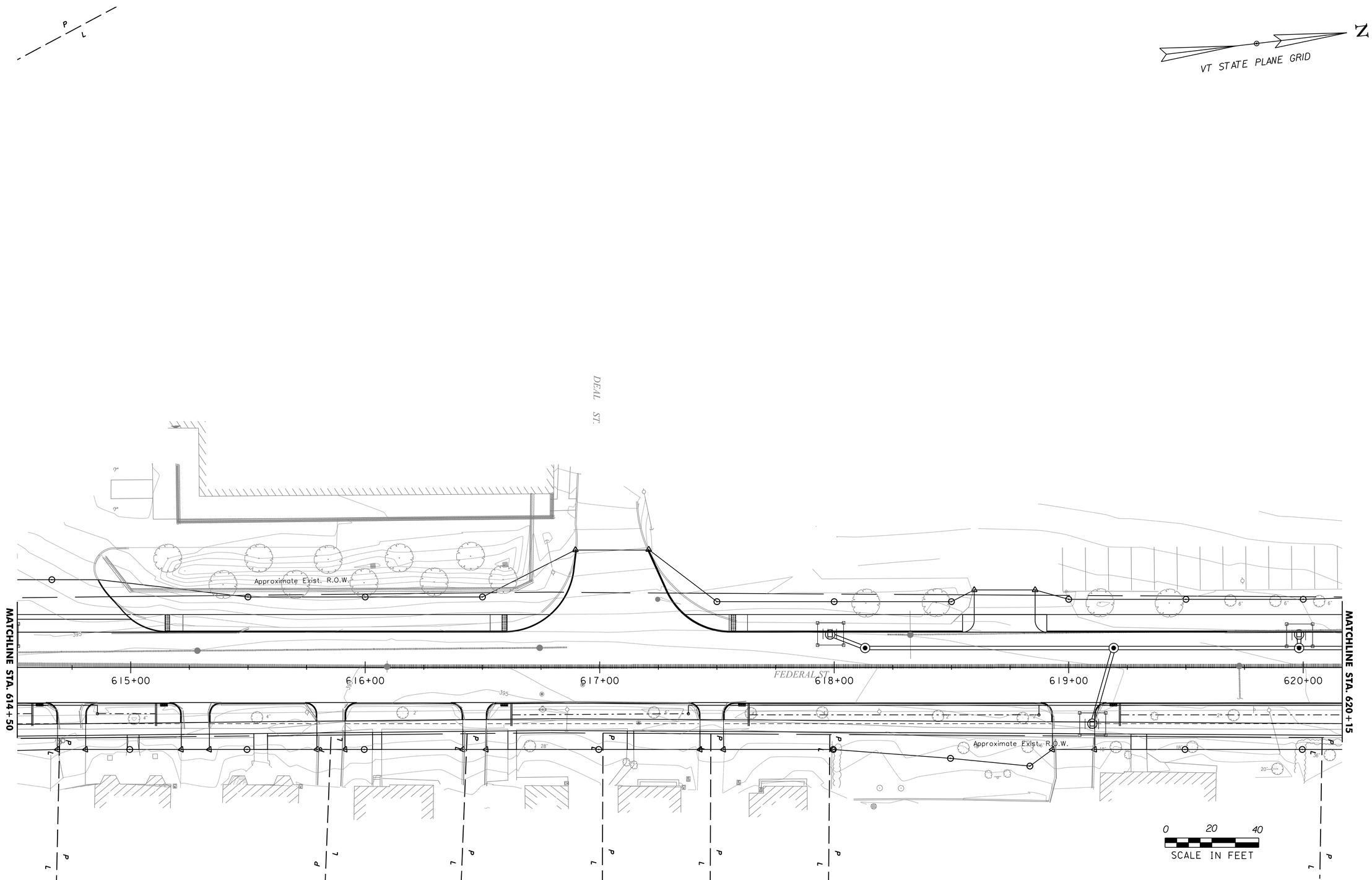

PROJECT NAME:	ST. ALBANS
PROJECT NUMBER:	HPP 8000(17)

FILE NAME: 57414_BDR_ero.dgn	PLOT DATE: 3/4/2016
PROJECT LEADER: M. A. COLGAN	DRAWN BY: A.J. GOUDREAU
DESIGNED BY: D. M. PECK	CHECKED BY: M.C. SCOTT
EPSC PLAN (13 OF 18)	SHEET 144 OF 230

VHB 57414.00

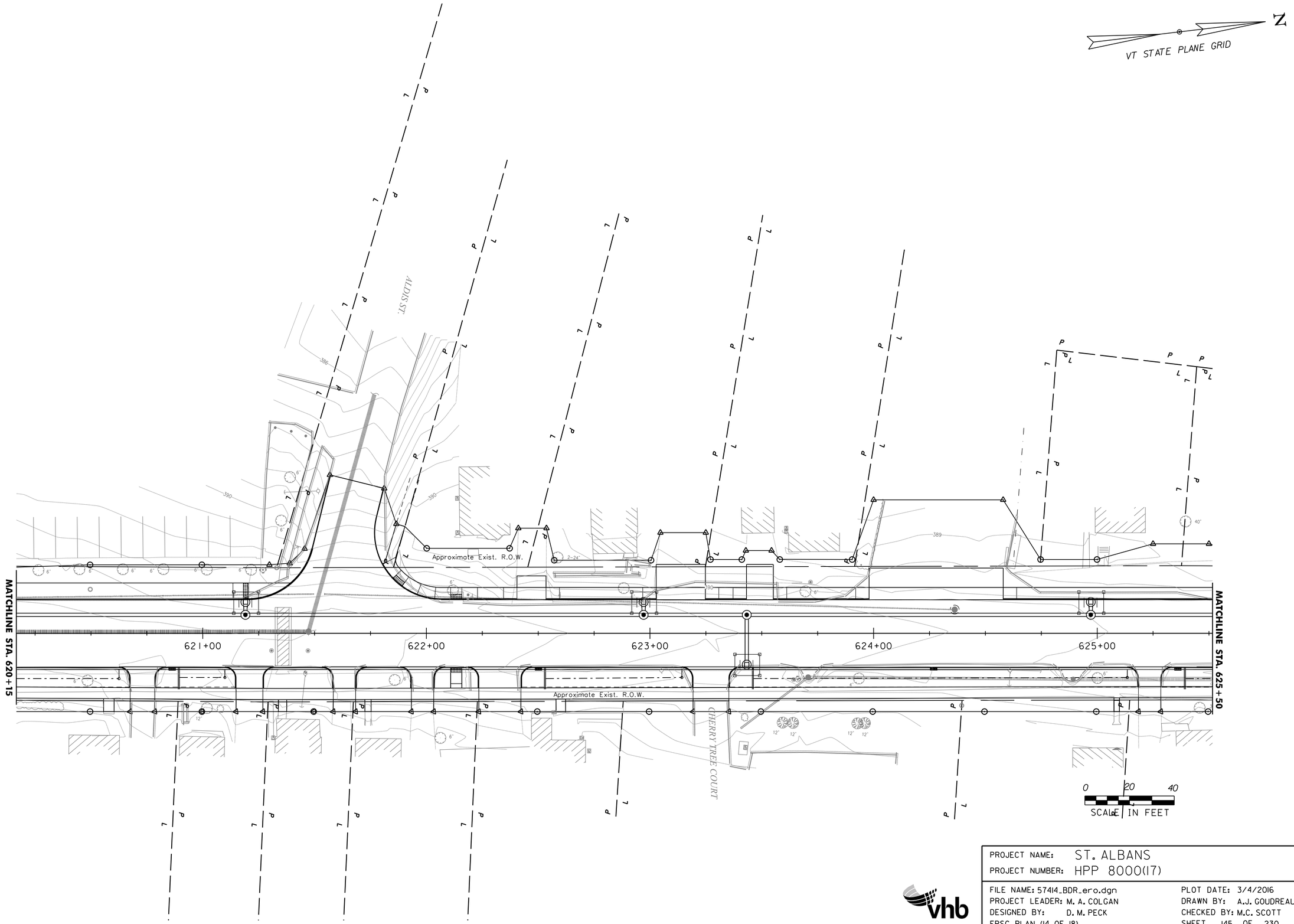

PROJECT NAME: ST. ALBANS
PROJECT NUMBER: HPP 8000(17)

FILE NAME: 57414_BDR_ero.dgn
PROJECT LEADER: M. A. COLGAN
DESIGNED BY: D. M. PECK
EPSC PLAN (14 OF 18)

PLOT DATE: 3/4/2016
DRAWN BY: A.J. GOUDREAU
CHECKED BY: M.C. SCOTT
SHEET 145 OF 230

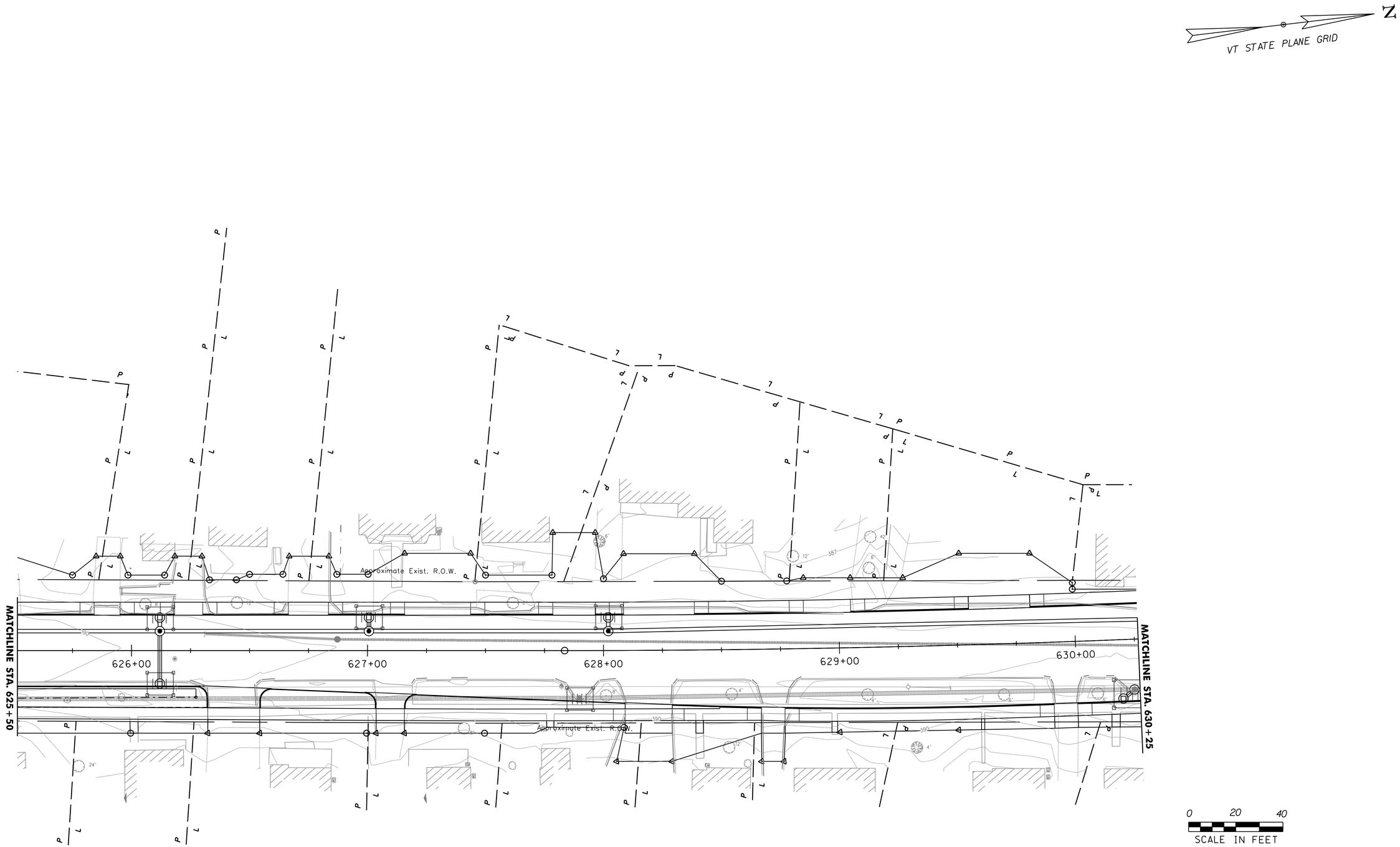

PROJECT NAME:	ST. ALBANS
PROJECT NUMBER:	HPP 8000(17)

FILE NAME: 57414_BDR_ero.dgn	PLOT DATE: 3/4/2016
PROJECT LEADER: M. A. COLGAN	DRAWN BY: A.J. GOUDREAU
DESIGNED BY: D. M. PECK	CHECKED BY: M.C. SCOTT
EPSC PLAN (15 OF 18)	SHEET 146 OF 230

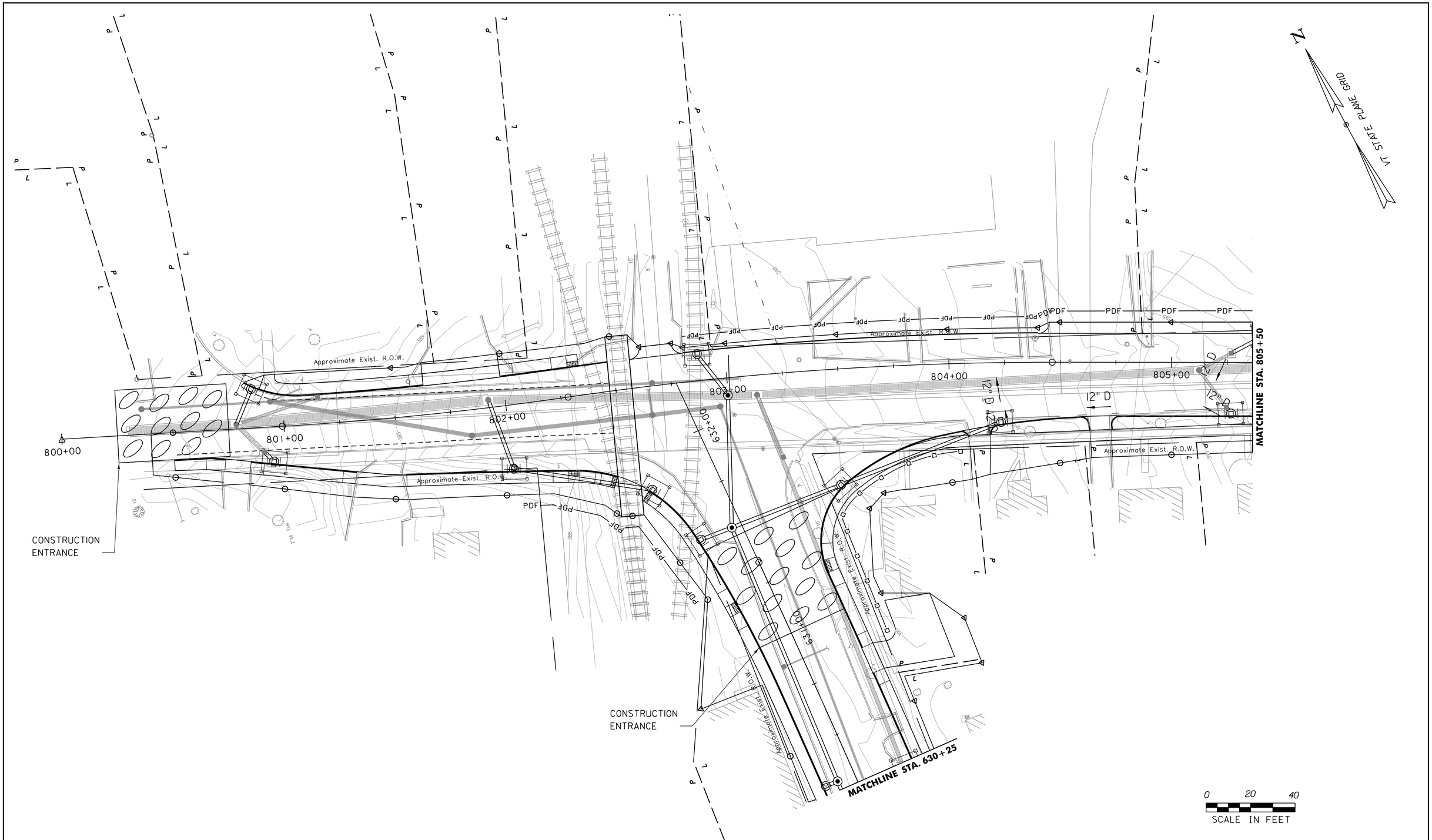

PROJECT NAME: ST. ALBANS	
PROJECT NUMBER: HPP 8000(17)	
FILE NAME: 57414_BDR_ero.dgn	PLOT DATE: 3/4/2016
PROJECT LEADER: M. A. COLGAN	DRAWN BY: A.J. GOUDREAU
DESIGNED BY: D. M. PECK	CHECKED BY: M.C. SCOTT
EPSC PLAN (16 OF 18)	SHEET 147 OF 230

VHB 57414.00

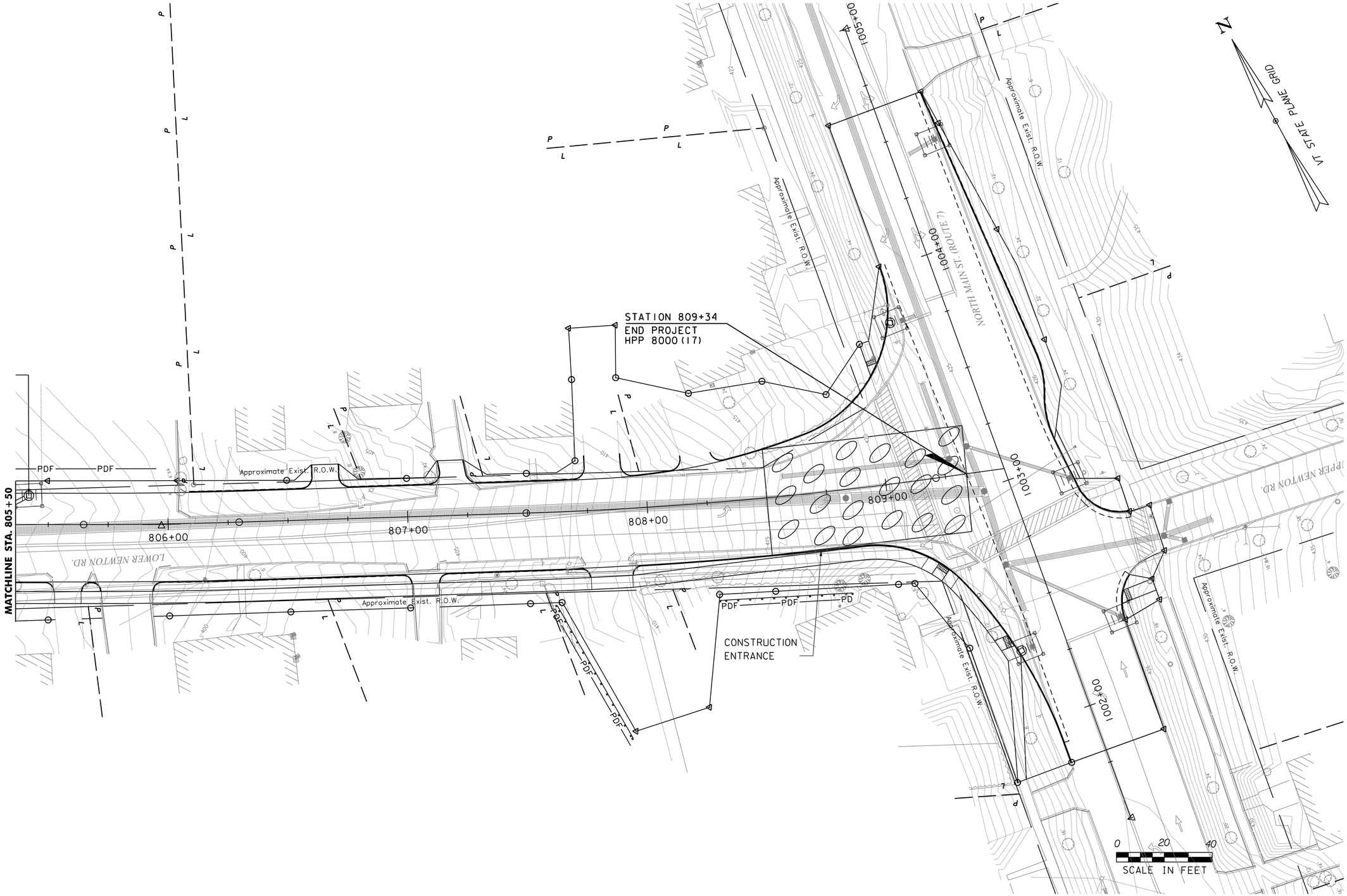

PROJECT NAME:	ST. ALBANS
PROJECT NUMBER:	HPP 8000(17)

vhb

FILE NAME: 57414_BDR_ero.dgn	PLOT DATE: 3/4/2016
PROJECT LEADER: M. A. COLGAN	DRAWN BY: A.J. GOUDREAU
DESIGNED BY: D. M. PECK	CHECKED BY: M.C. SCOTT
EPSC PLAN (17 OF 18)	SHEET 148 OF 230

VHB 57414.00

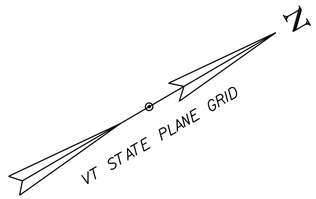

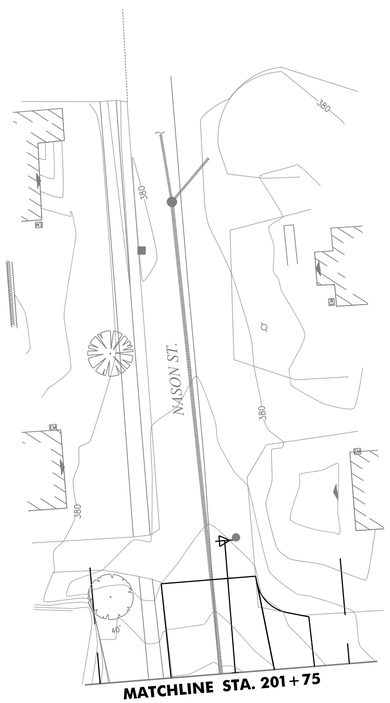

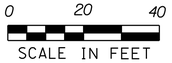

PROJECT NAME: ST. ALBANS	
PROJECT NUMBER: HPP 8000(17)	
FILE NAME: 57414_BDR_ero.dgn	PLOT DATE: 3/4/2016
PROJECT LEADER: M. A. COLGAN	DRAWN BY: A.J. GOUDREAU
DESIGNED BY: D. M. PECK	CHECKED BY: M.C. SCOTT
EPSC PLANS	SHEET 149 OF 230

VHB 57414.00

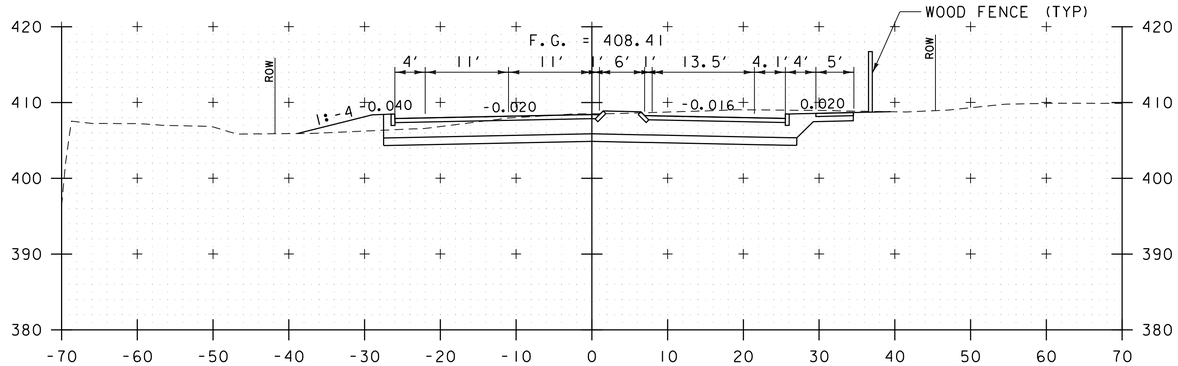

101+00

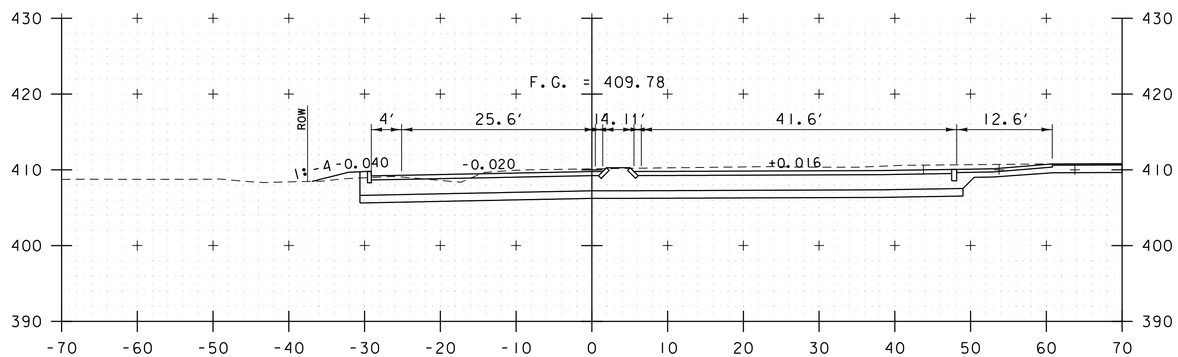

100+50

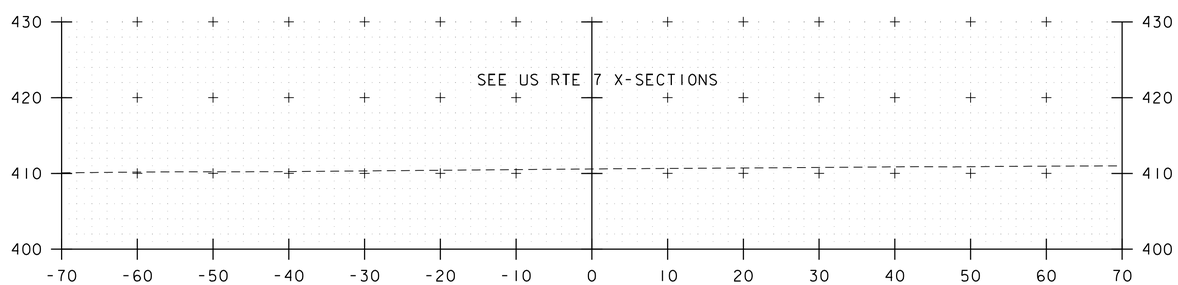

100+00

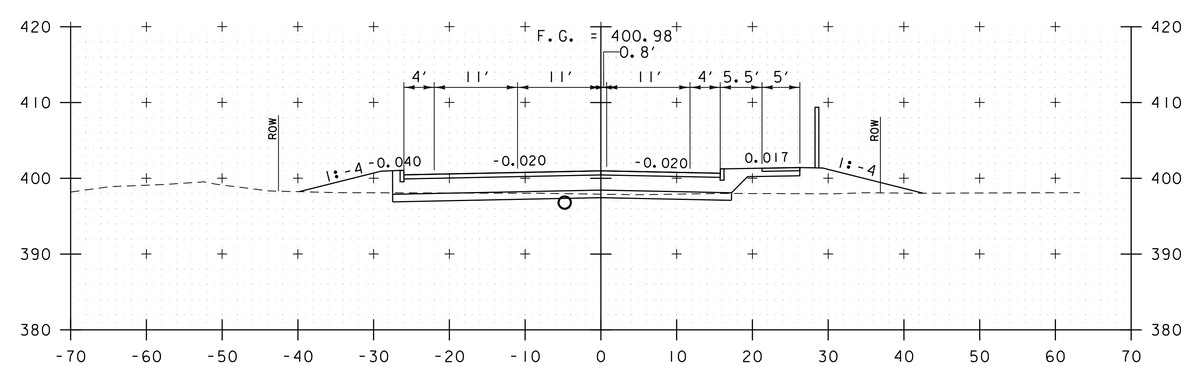

102+50

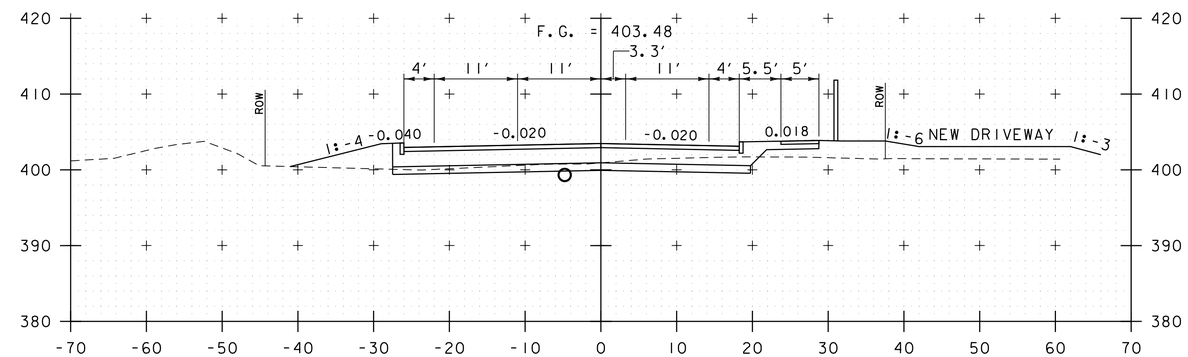

102+00

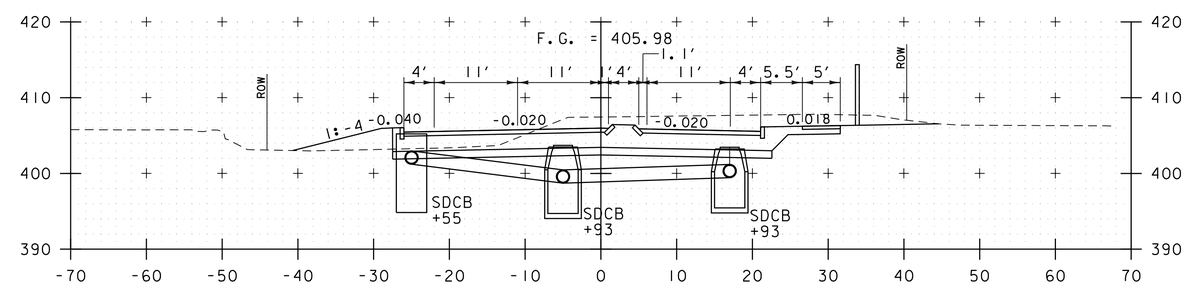

101+50

NASON STREET CONNECTOR

PROJECT NAME: ST. ALBANS	
PROJECT NUMBER: HPP 8000(17)	
FILE NAME: 57414_XS_NasonConnector.dgn	PLOT DATE: 3/4/2016
PROJECT LEADER: J.D. SALADINO	DRAWN BY: DMP / WAD
DESIGNED BY: D.M. PECK	CHECKED BY: G.L. BAKOS
CROSS SECTION SHEET 1	SHEET 51 OF 106

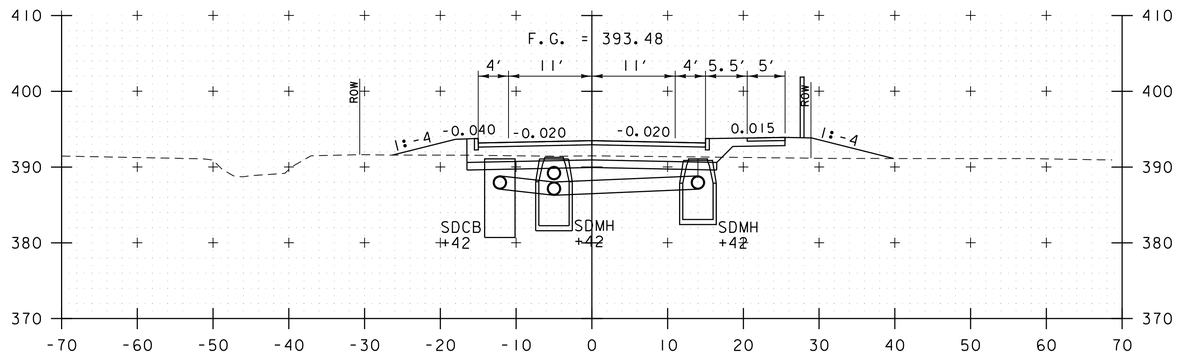

104+00

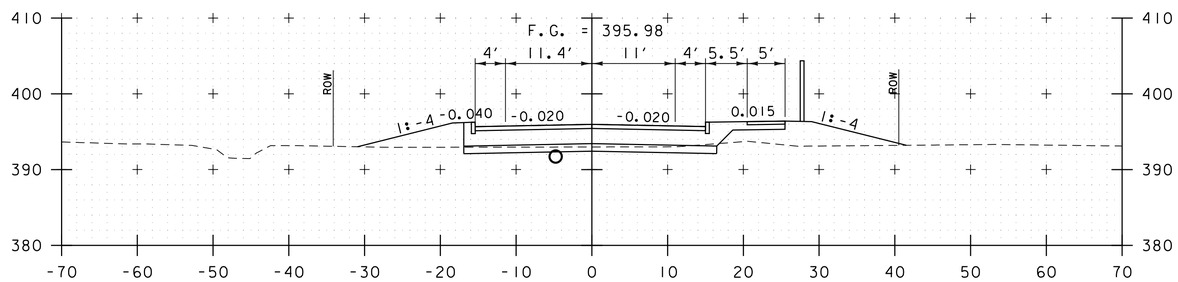

103+50

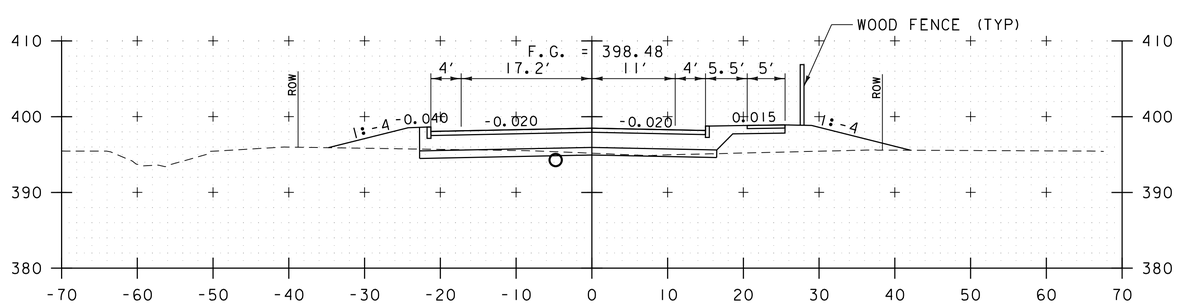

103+00

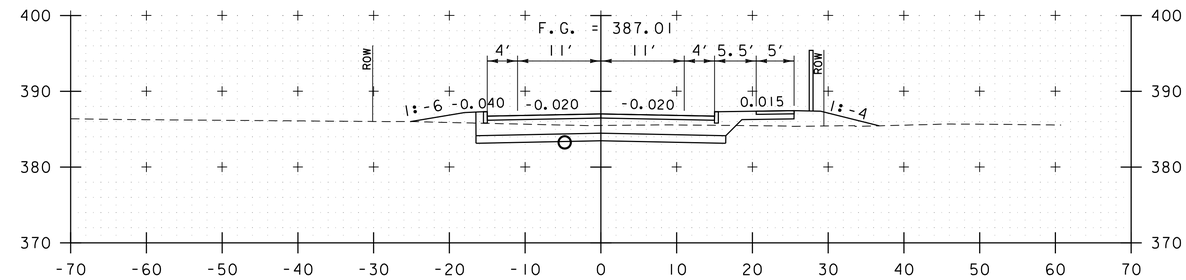

105+50

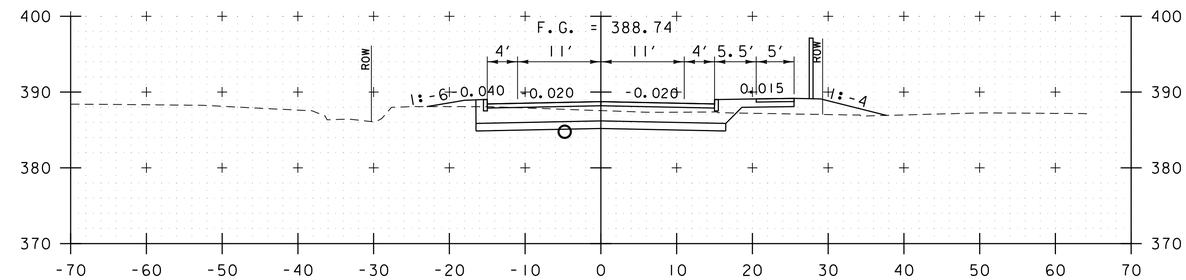

105+00

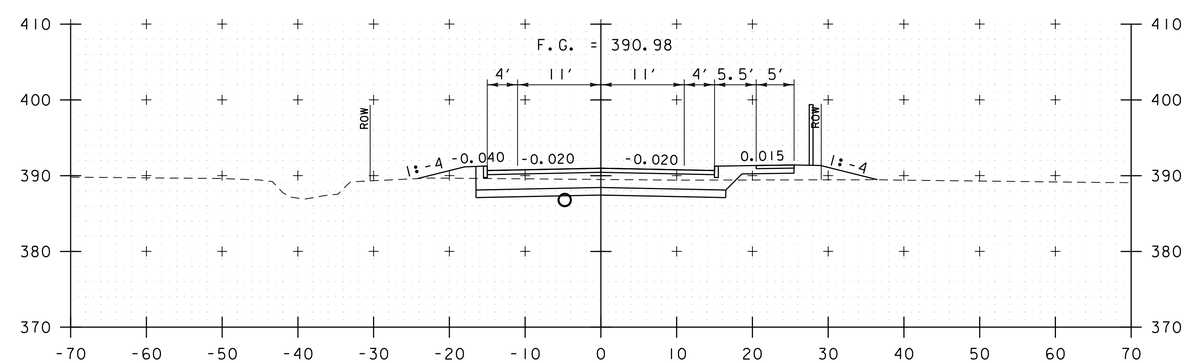

104+50

NASON STREET CONNECTOR

PROJECT NAME: ST. ALBANS	
PROJECT NUMBER: HPP 8000(17)	
FILE NAME: 57414_XS_NasonConnector.dgn	PLOT DATE: 3/4/2016
PROJECT LEADER: J.D. SALADINO	DRAWN BY: DMP / WAD
DESIGNED BY: D.M. PECK	CHECKED BY: G.L. BAKOS
CROSS SECTION SHEET 2	SHEET 52 OF 106

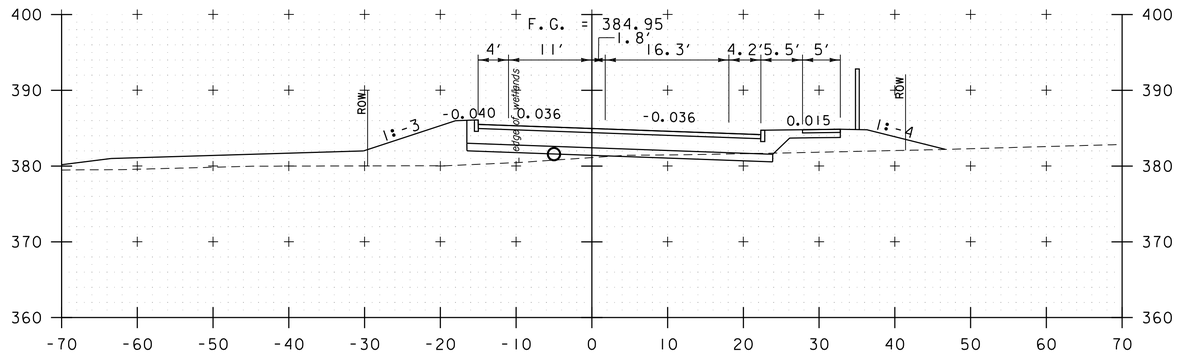

107+00

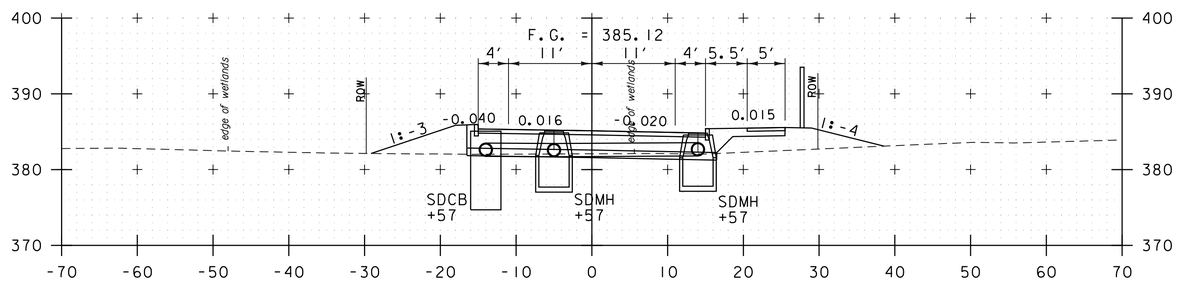

106+50

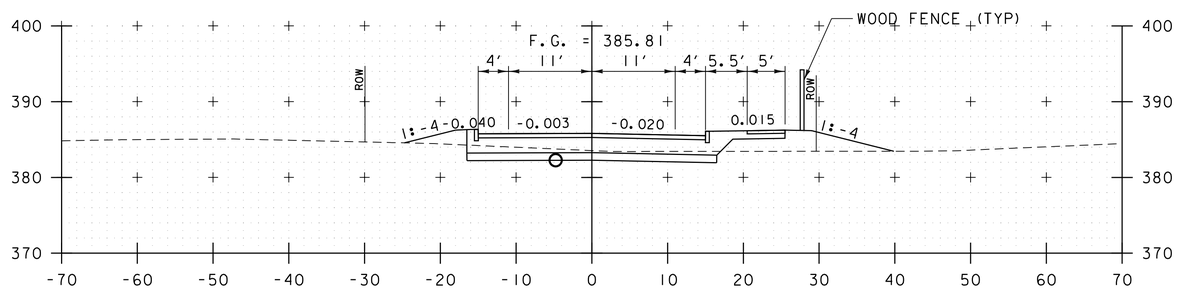

106+00

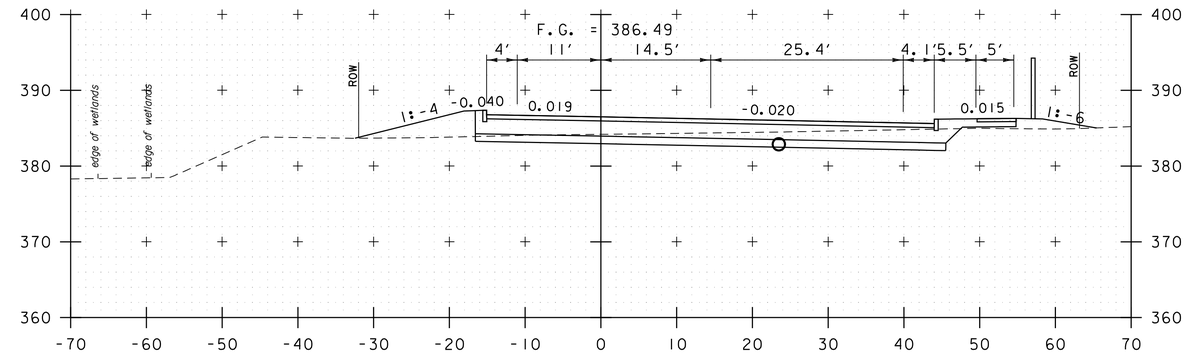

108+50

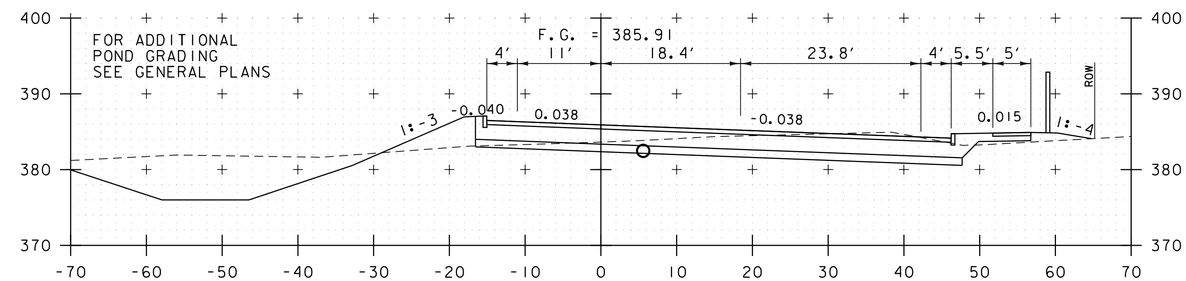

108+00

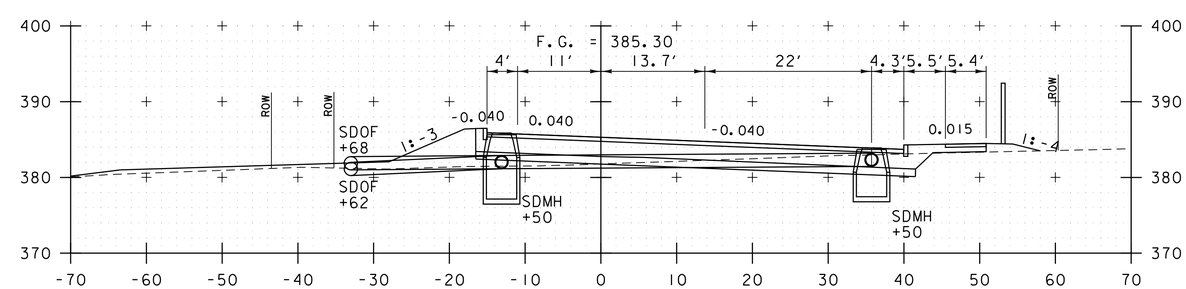

107+50

NASON STREET CONNECTOR

PROJECT NAME: ST. ALBANS	
PROJECT NUMBER: HPP 8000(17)	
FILE NAME: 57414_XS_NasonConnector.dgn	PLOT DATE: 3/4/2016
PROJECT LEADER: J.D. SALADINO	DRAWN BY: DMP / WAD
DESIGNED BY: D.M. PECK	CHECKED BY: G.L. BAKOS
CROSS SECTION SHEET 3	SHEET 53 OF 106

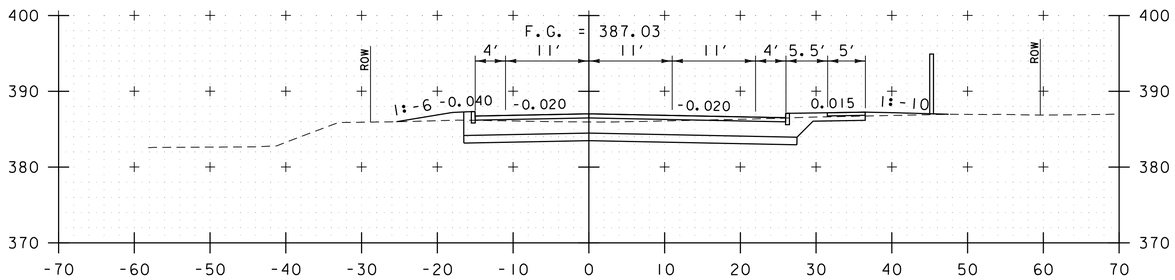

110+00

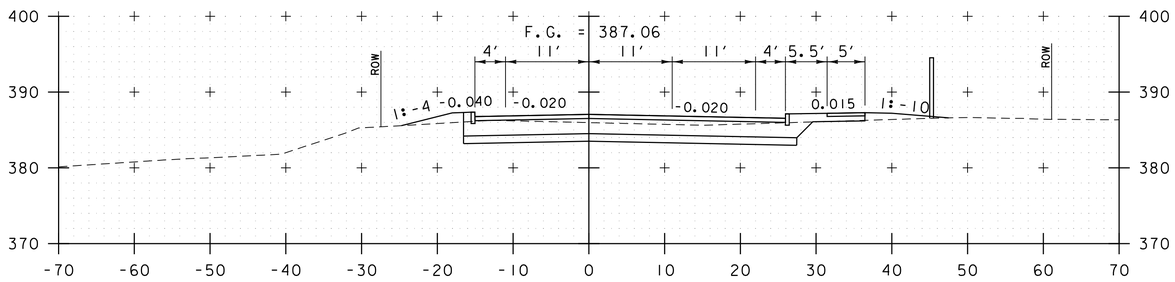

109+50

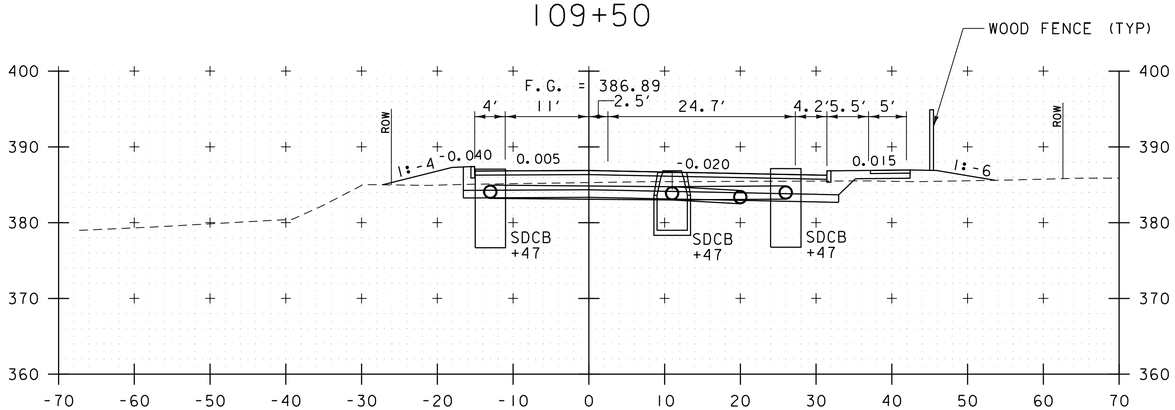

109+00

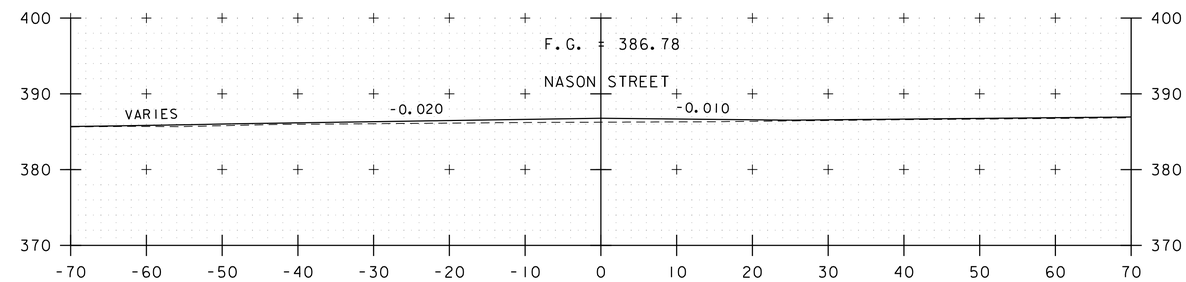

110+56

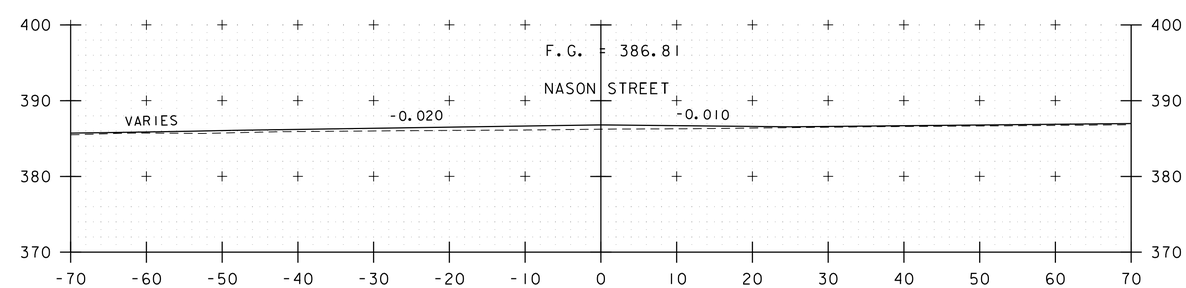

110+50

NASON STREET CONNECTOR

PROJECT NAME: ST. ALBANS	
PROJECT NUMBER: HPP 8000(17)	
FILE NAME: 57414_XS_NasonConnector.dgn	PLOT DATE: 3/4/2016
PROJECT LEADER: J.D. SALADINO	DRAWN BY: DMP / WAD
DESIGNED BY: D.M. PECK	CHECKED BY: G.L. BAKOS
CROSS SECTION SHEET 4	SHEET 54 OF 106

STA. 202+67
END RAILROAD CROSSING
BEGIN ROADWAY WORK

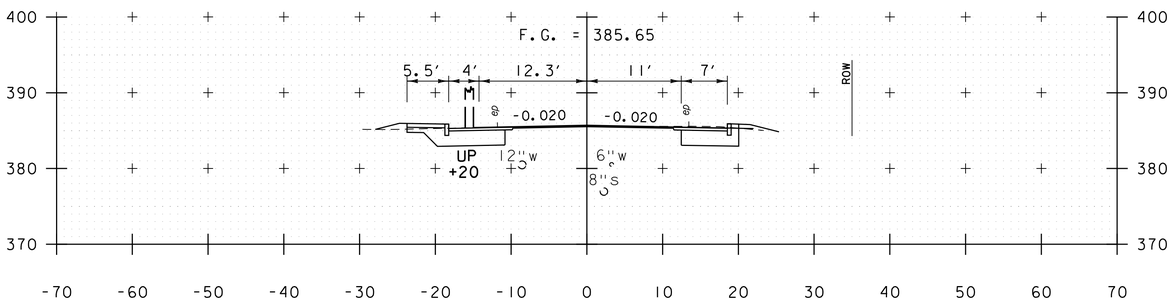

STA. 202+57
END ROADWAY WORK
BEGIN RAILROAD CROSSING

203+00

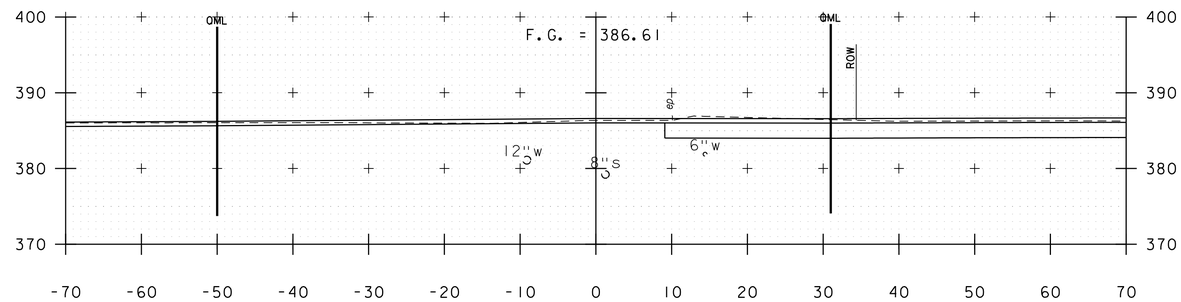

SEE LEMNAH DRIVE
CROSS SECTIONS

204+00

SEE NASON CONNECTOR
CROSS SECTIONS

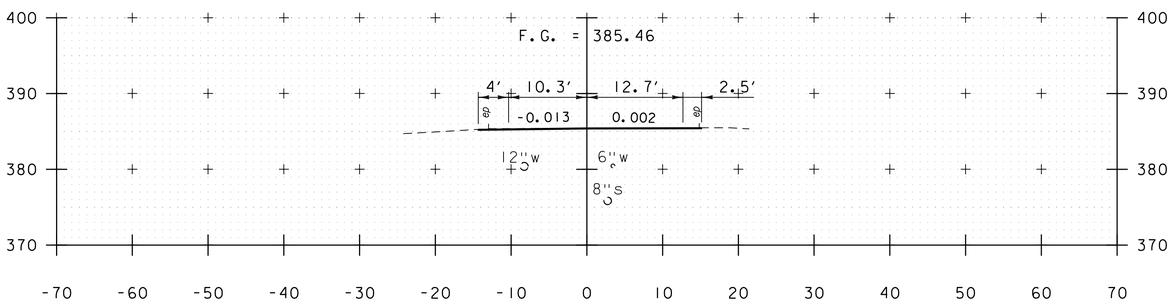

202+50

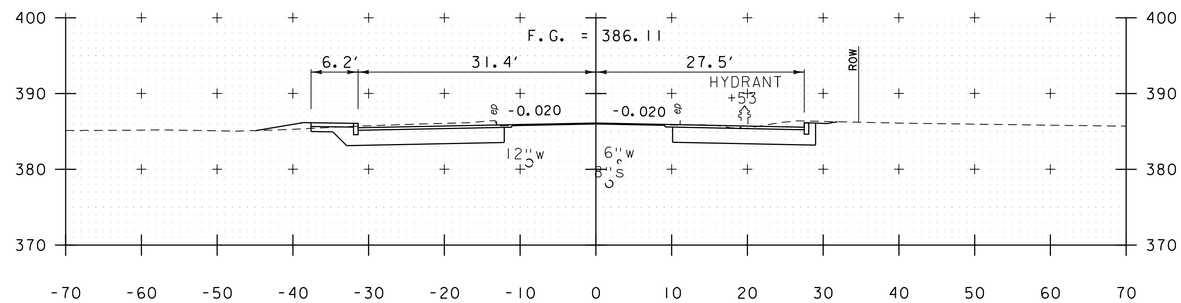

203+50

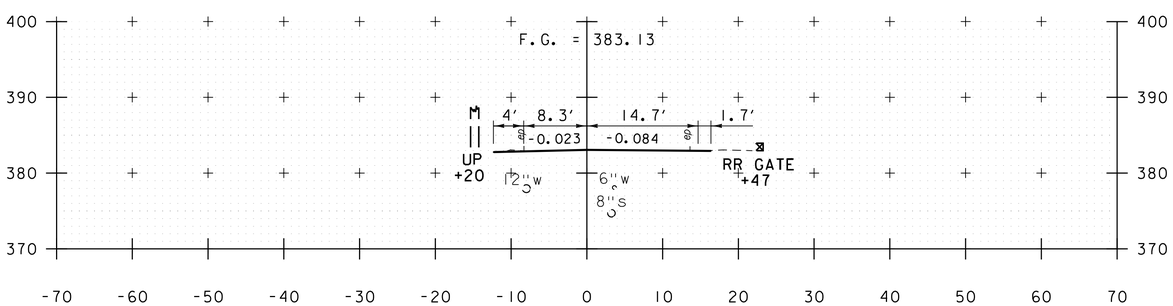

202+00

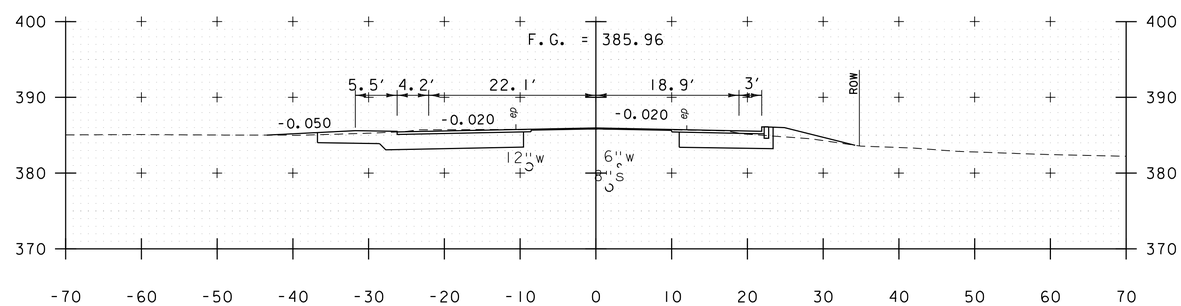

203+35

NASON STREET

PROJECT NAME: ST. ALBANS	
PROJECT NUMBER: HPP 8000(17)	
FILE NAME: 57414_XS_NasonStreet.dgn	PLOT DATE: 3/4/2016
PROJECT LEADER: M.A. COLGAN	DRAWN BY: K.C. BARRY
DESIGNED BY: D.M. PECK	CHECKED BY: M.J. SERVETAS
CROSS SECTION SHEET X OF XX	SHEET 154 OF 230

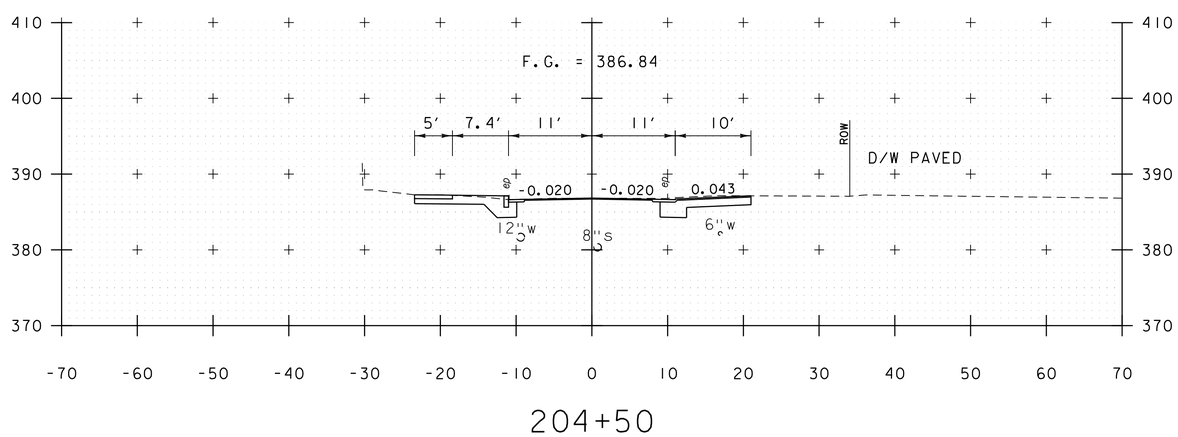

204+50

NASON STREET

PROJECT NAME: ST. ALBANS	
PROJECT NUMBER: HPP 8000(17)	
FILE NAME: 57414_XS_NasonStreet.dgn	PLOT DATE: 3/4/2016
PROJECT LEADER: M.A. COLGAN	DRAWN BY: K.C. BARRY
DESIGNED BY: D.M. PECK	CHECKED BY: M.J. SERVETAS
CROSS SECTION SHEET X OF XX	SHEET 155 OF 230

VHB 57414.00

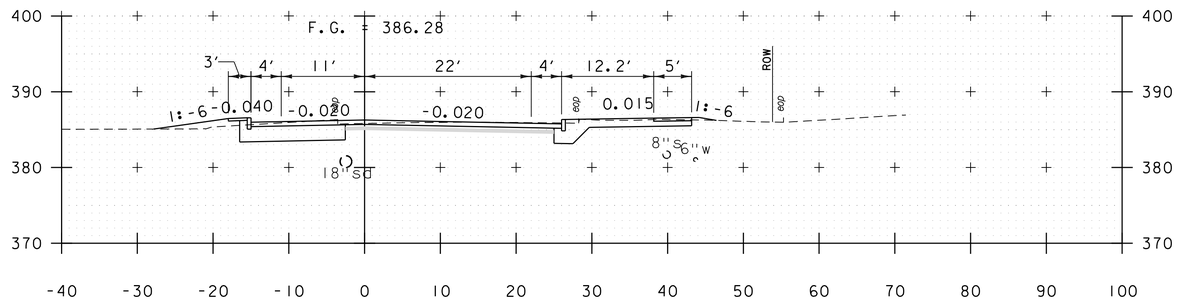

301+00

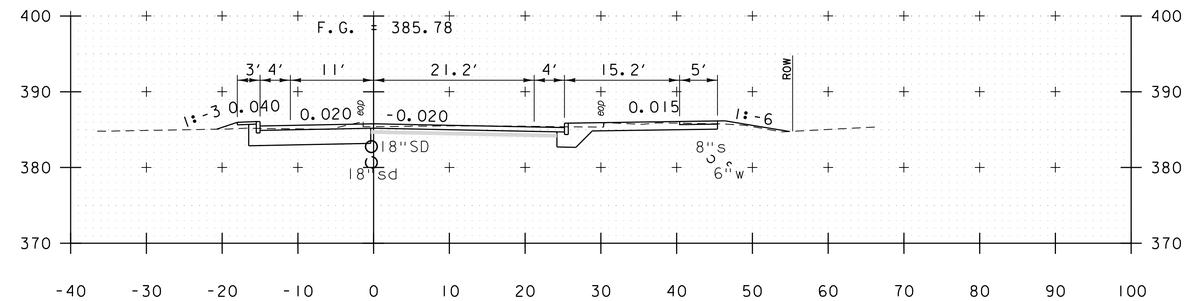

302+00

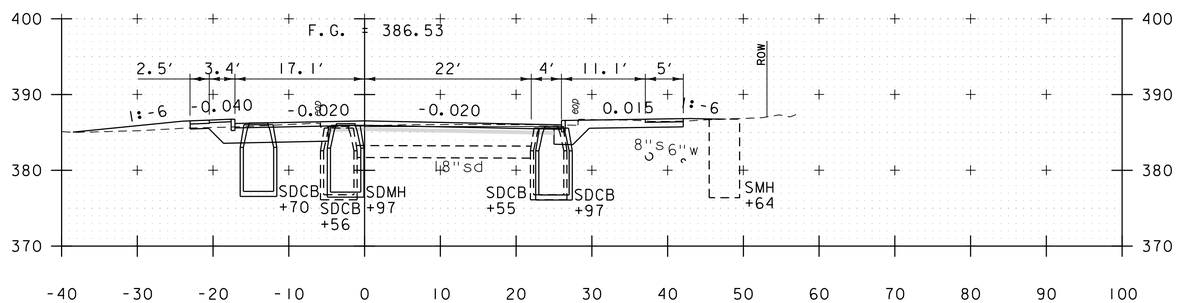

300+50

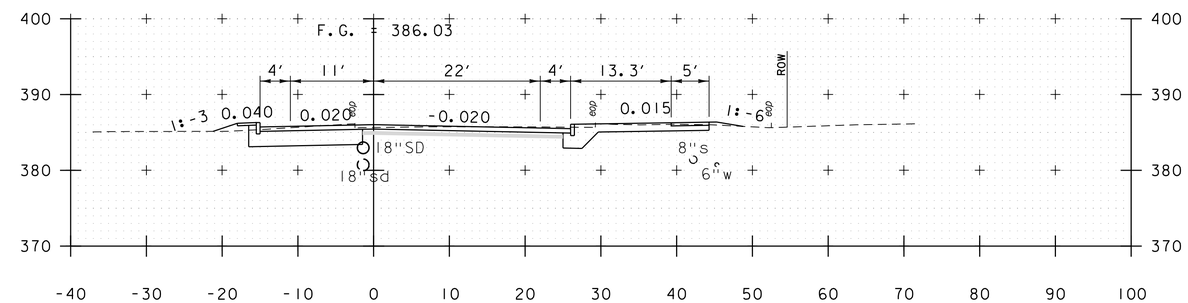

301+50

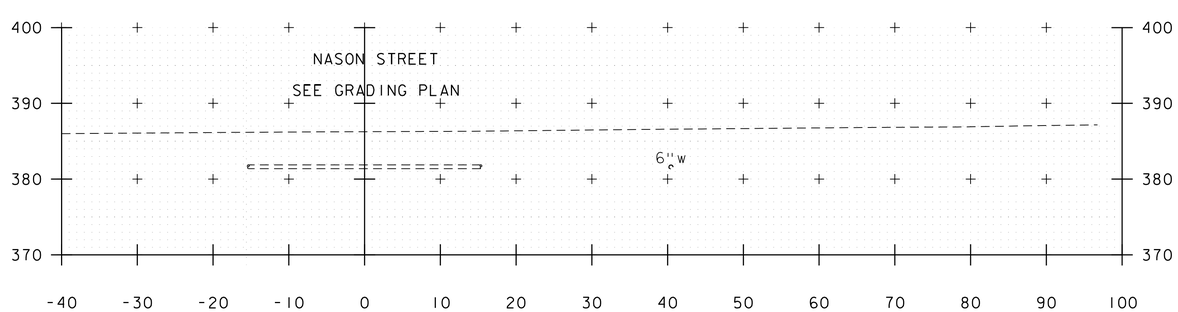

300+00

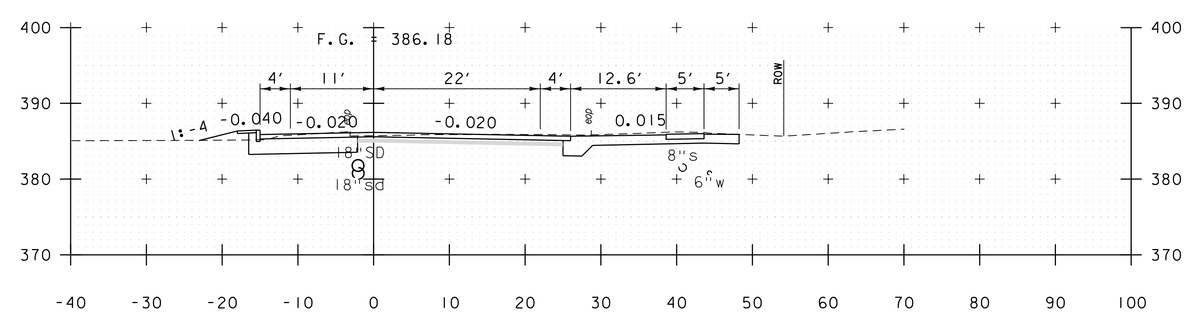

301+20

LEMNAH DRIVE

PROJECT NAME: ST. ALBANS	
PROJECT NUMBER: HPP 8000(17)	
FILE NAME: 57414_XS_LemnahDrive.dgn	PLOT DATE: 3/4/2016
PROJECT LEADER: M.A. COLGAN	DRAWN BY: M.C. SCOTT
DESIGNED BY: M.C. SCOTT	CHECKED BY: ------
CROSS SECTIONS	SHEET 156 OF 230

VHB 57414.00

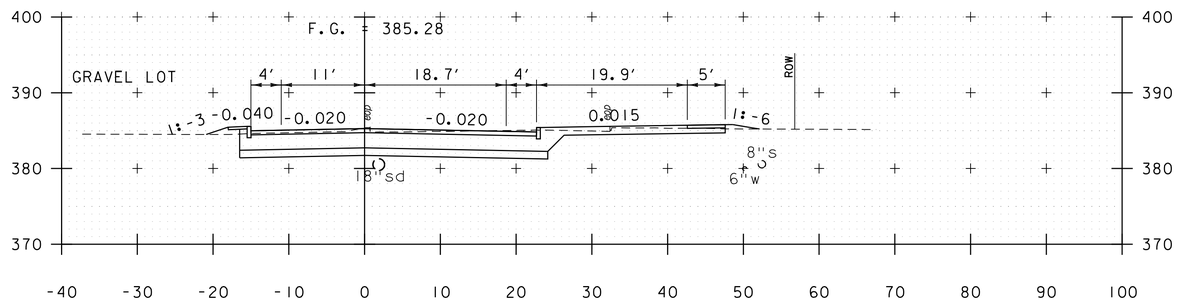

303+00

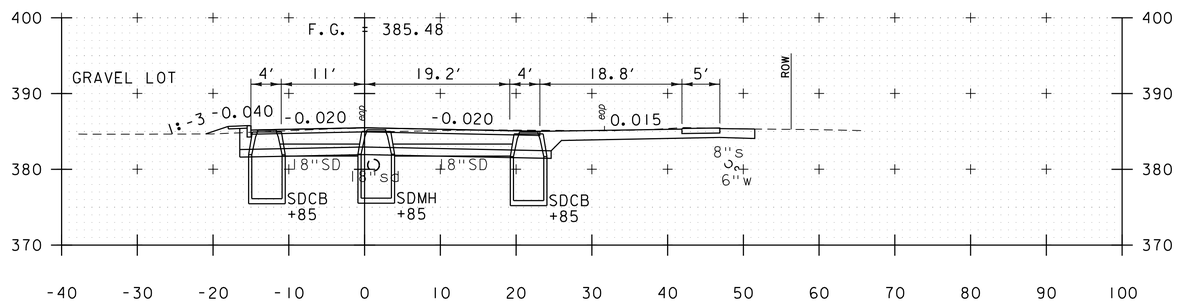

302+68

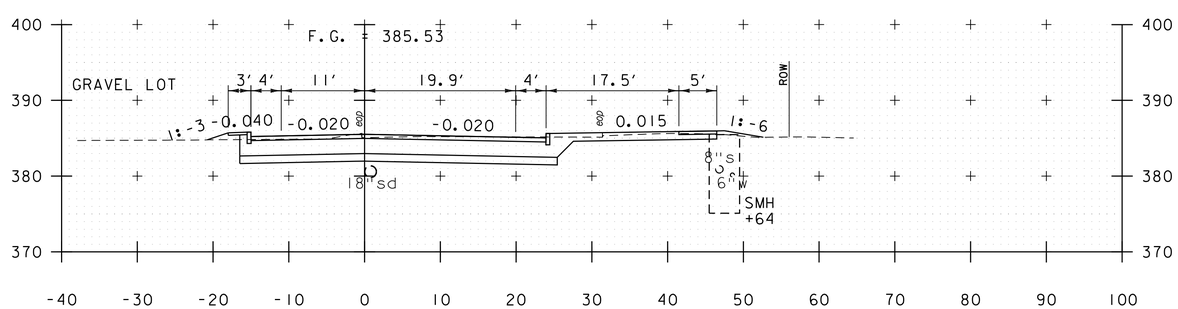

302+50

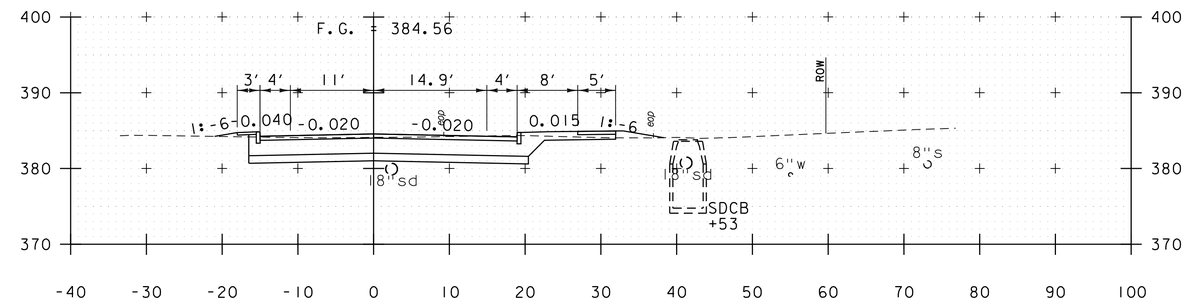

304+50

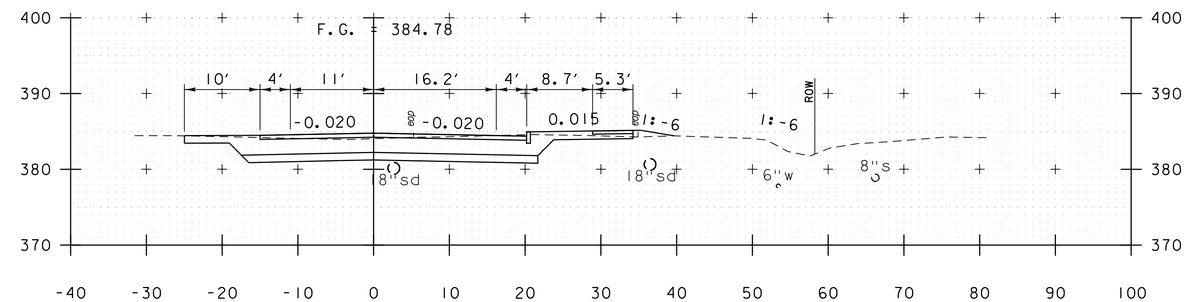

304+00

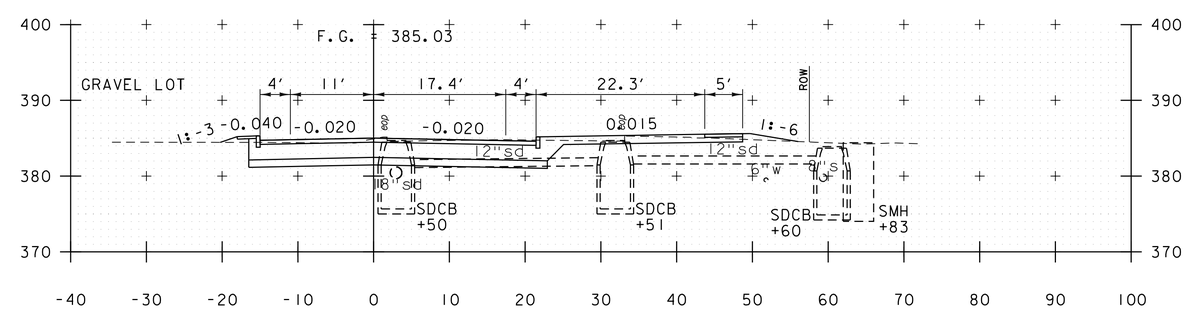

303+50

LEMNAH DRIVE

PROJECT NAME: ST. ALBANS
PROJECT NUMBER: HPP 8000(17)

FILE NAME: 57414_XS_LemnahDrive.dgn
PROJECT LEADER: M.A. COLGAN
DESIGNED BY: M.C. SCOTT
CROSS SECTIONS

PLOT DATE: 3/4/2016
DRAWN BY: M.C. SCOTT
CHECKED BY: ------
SHEET 157 OF 230

VHB 57414.00

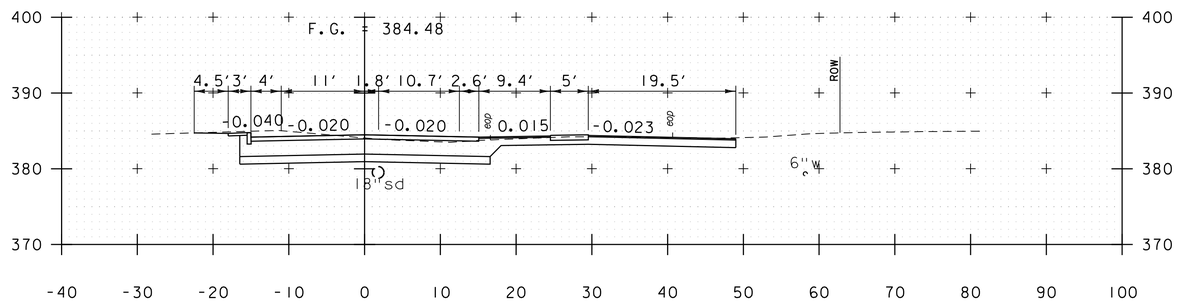

305+47

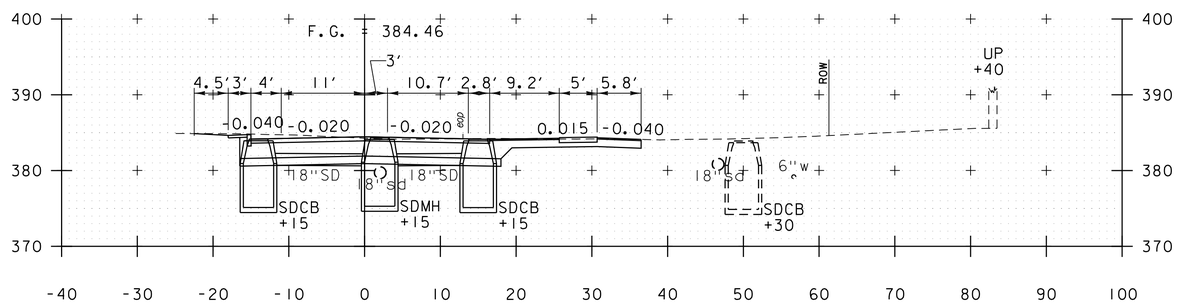

305+00

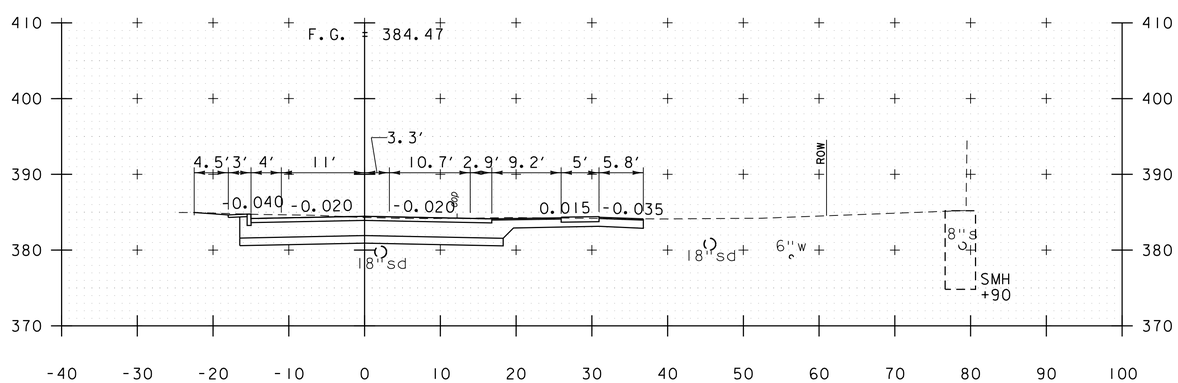

304+90

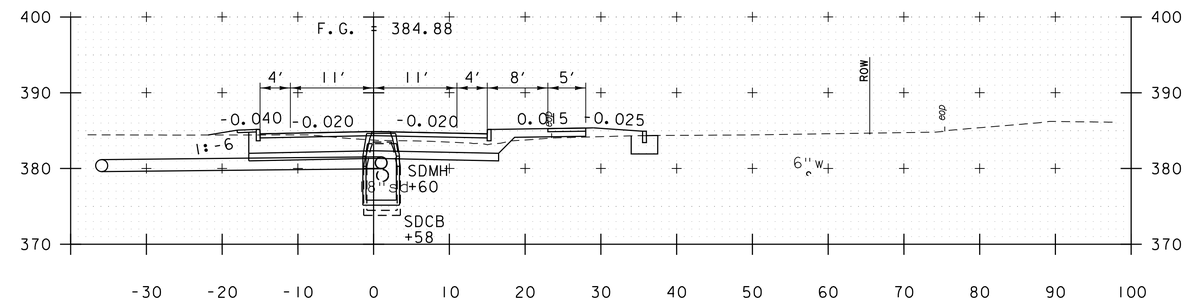

306+50

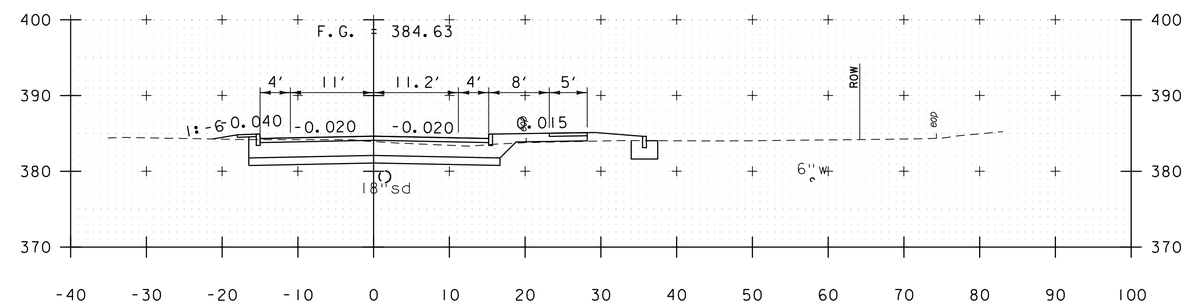

306+00

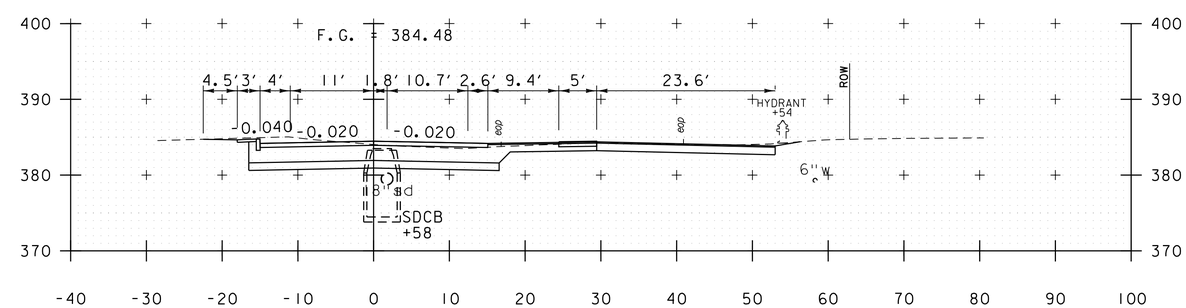

305+50

LEMNAH DRIVE

PROJECT NAME: ST. ALBANS	
PROJECT NUMBER: HPP 8000(17)	
FILE NAME: 57414_XS_LemnahDrive.dgn	PLOT DATE: 3/4/2016
PROJECT LEADER: M.A. COLGAN	DRAWN BY: M.C. SCOTT
DESIGNED BY: M.C. SCOTT	CHECKED BY: ------
CROSS SECTIONS	SHEET 158 OF 230

VHB 57414.00

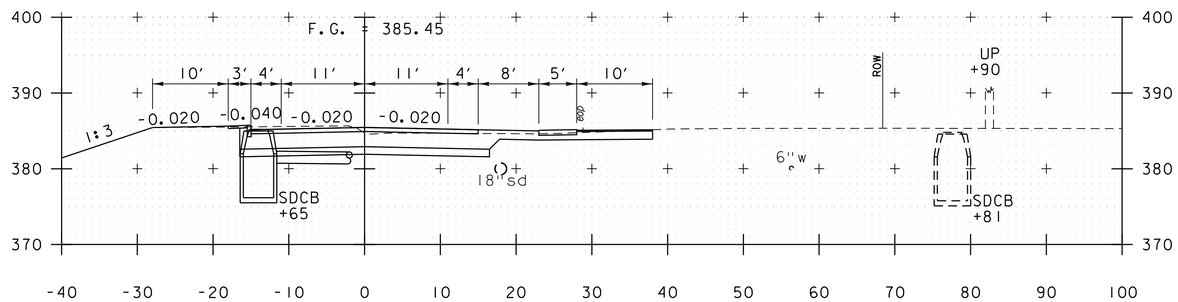

307+59

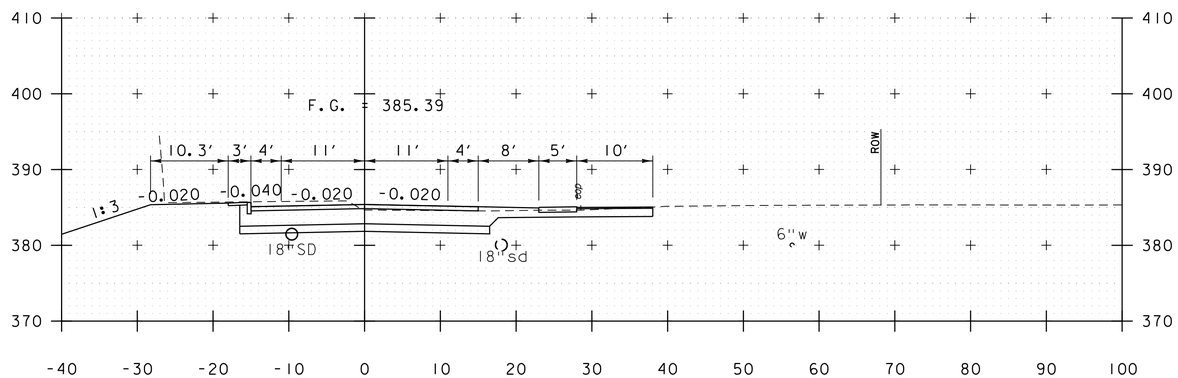

307+50

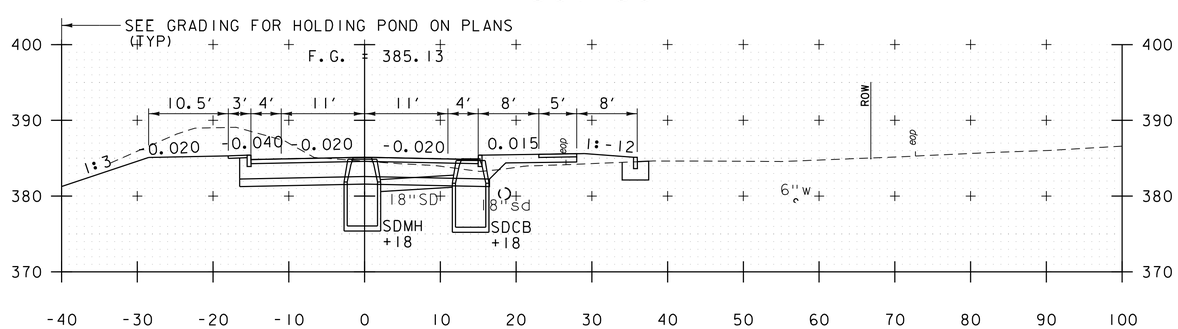

307+00

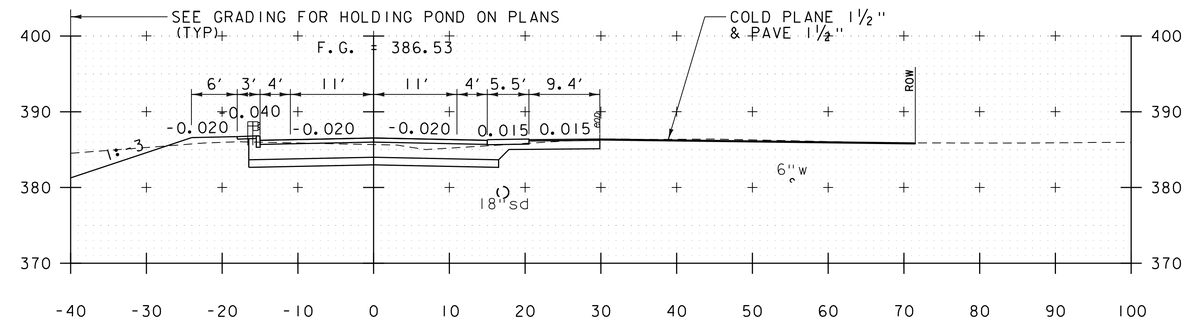

308+65

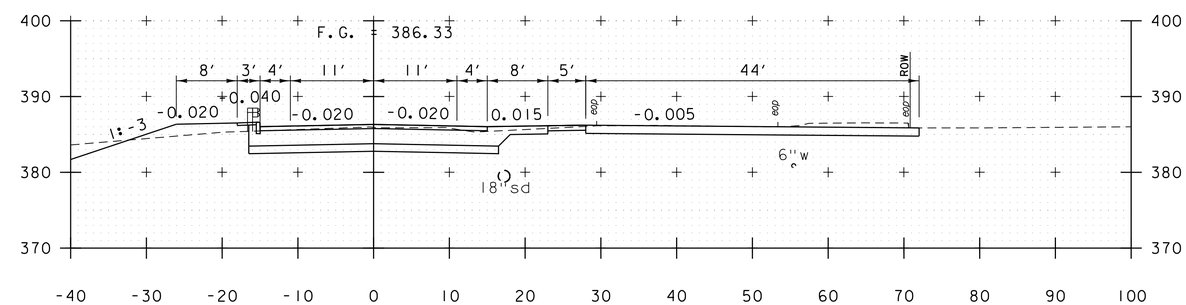

308+50

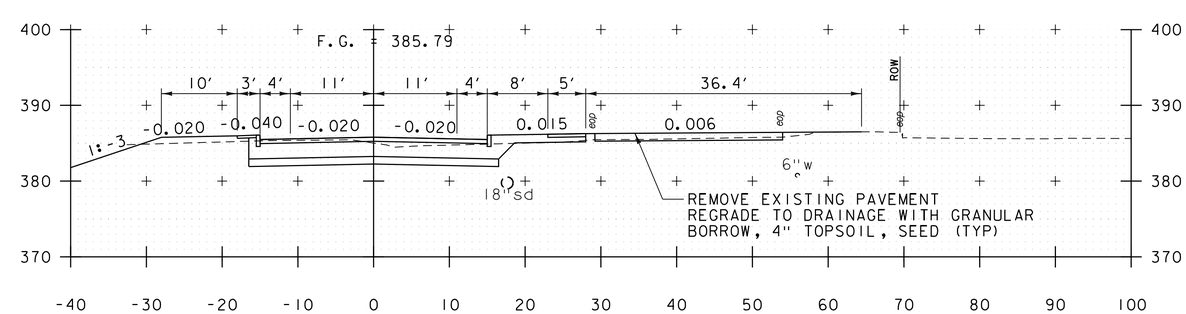

308+00

LEMNAH DRIVE

PROJECT NAME: ST. ALBANS	
PROJECT NUMBER: HPP 8000(17)	
FILE NAME: 57414_XS_LemnahDrive.dgn	PLOT DATE: 3/4/2016
PROJECT LEADER: M.A. COLGAN	DRAWN BY: M.C. SCOTT
DESIGNED BY: M.C. SCOTT	CHECKED BY: ------
CROSS SECTIONS	SHEET 159 OF 230

VHB 57414.00

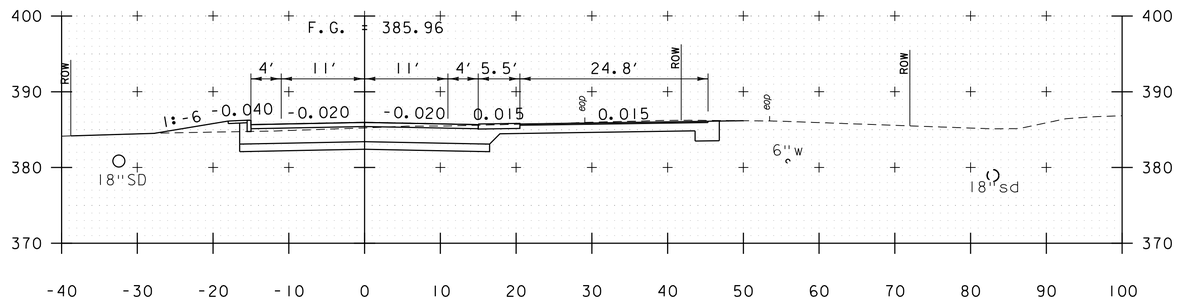

309+85

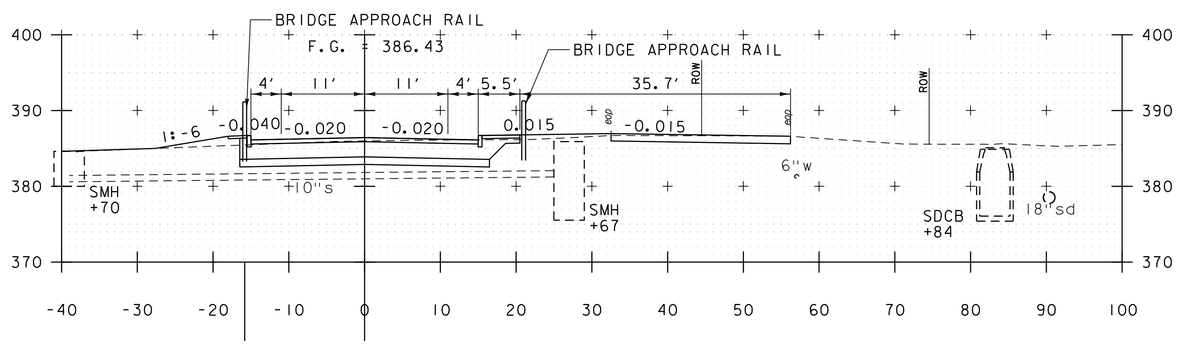

309+50

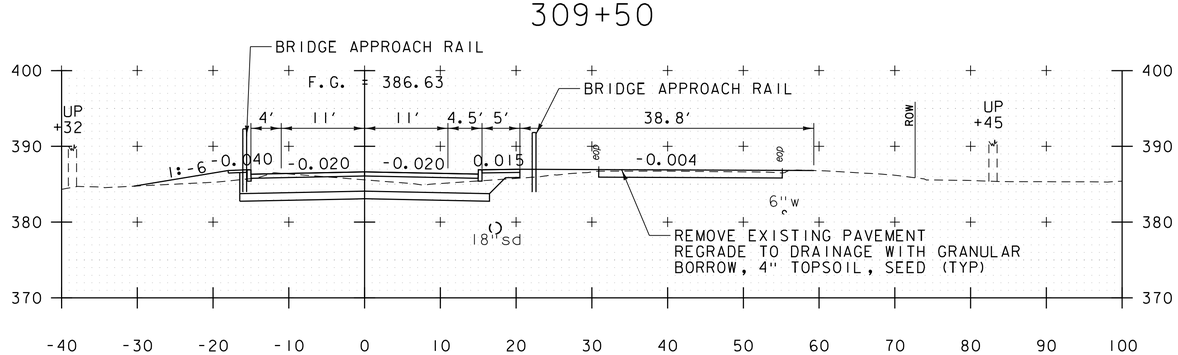

309+00

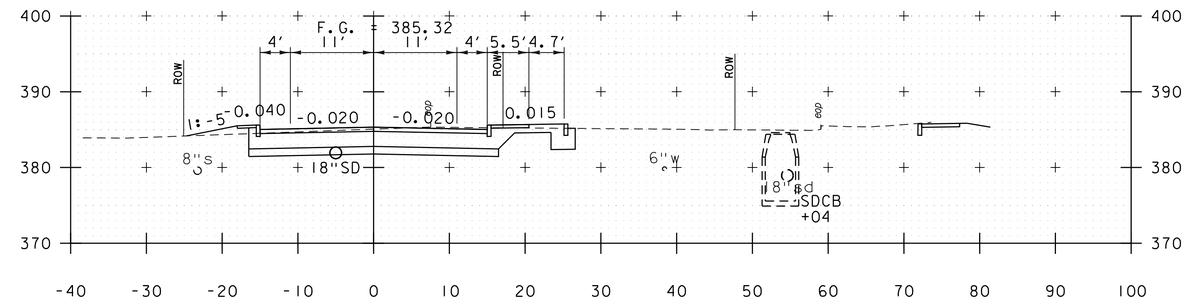

311+00

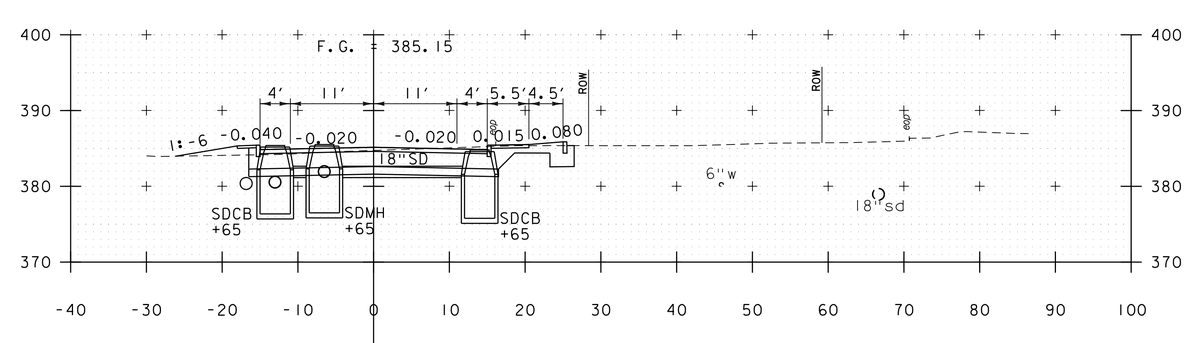

310+50

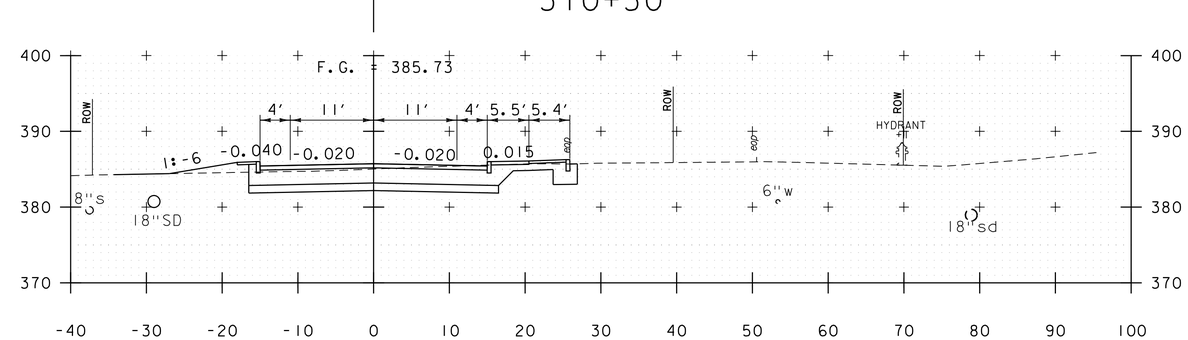

310+00

LEMNAH DRIVE

PROJECT NAME: ST. ALBANS	
PROJECT NUMBER: HPP 8000(17)	
FILE NAME: 57414_XS_LemnahDrive.dgn	PLOT DATE: 3/4/2016
PROJECT LEADER: M.A. COLGAN	DRAWN BY: M.C. SCOTT
DESIGNED BY: M.C. SCOTT	CHECKED BY: ------
CROSS SECTIONS	SHEET 160 OF 230

VHB 57414.00

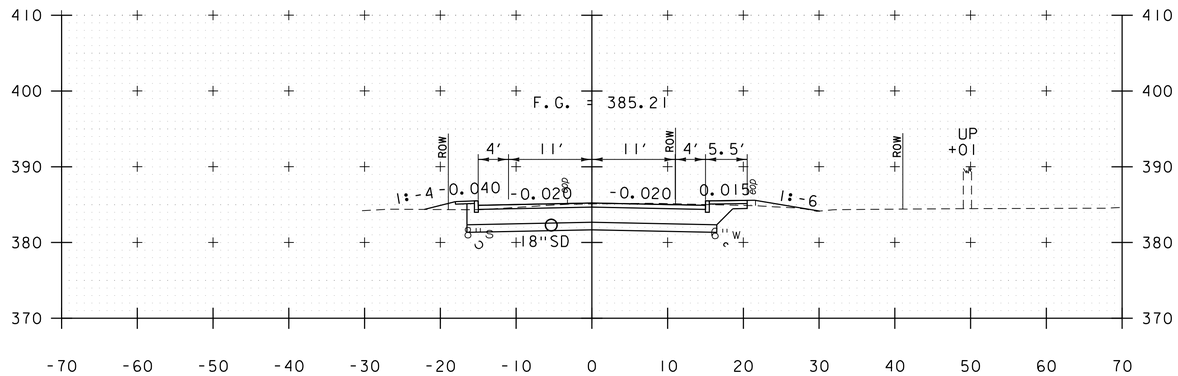

312+00

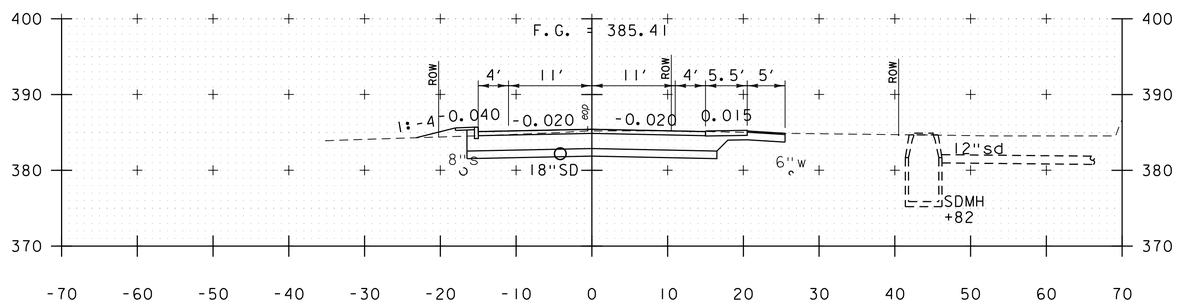

311+63

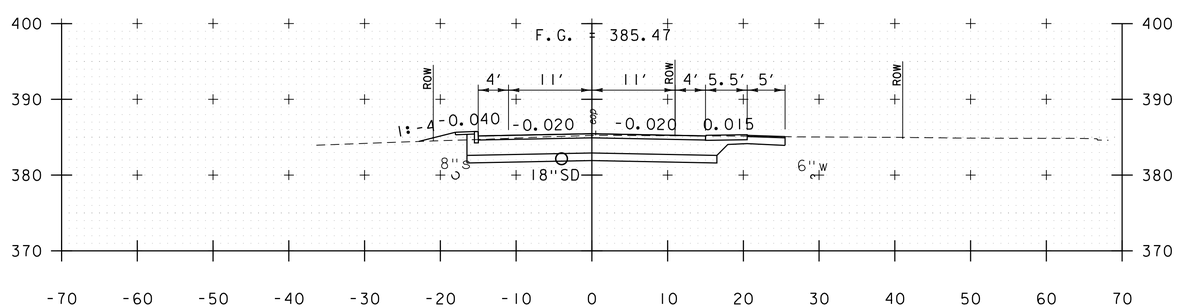

311+50

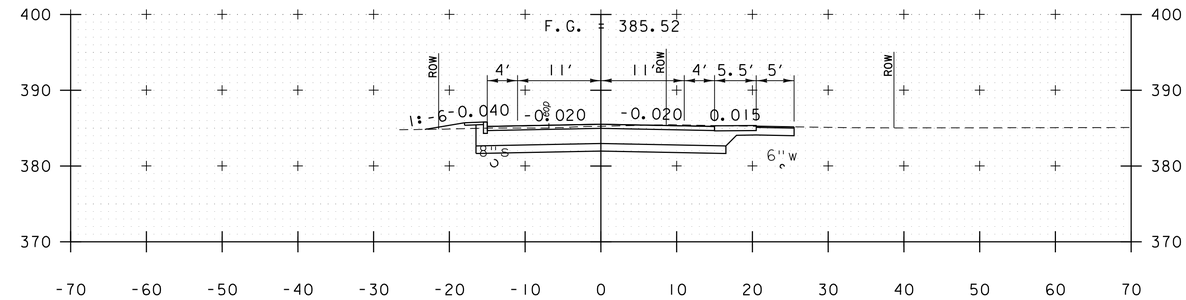

313+50

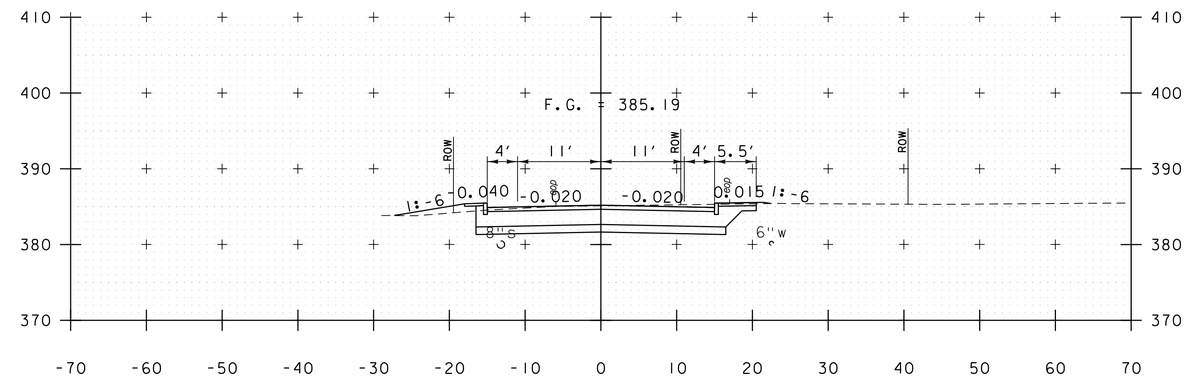

313+00

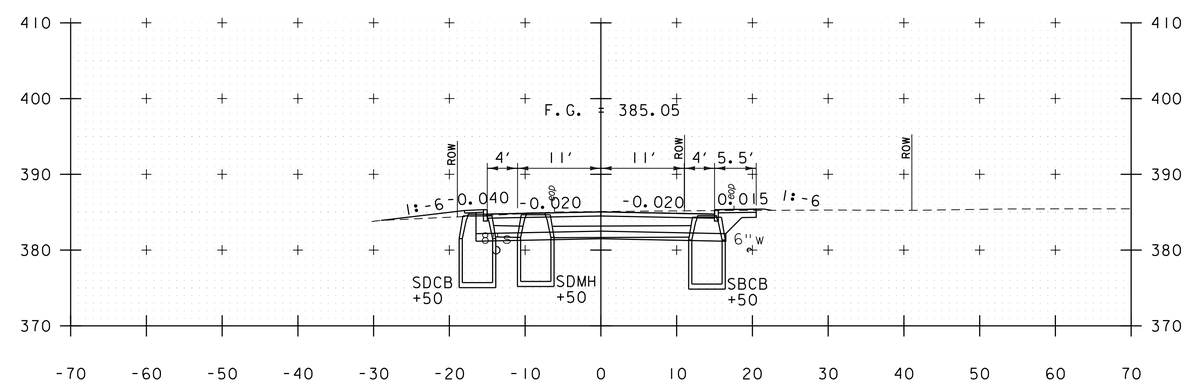

312+50

LEMNAH DRIVE

PROJECT NAME: ST. ALBANS	
PROJECT NUMBER: HPP 8000(17)	
FILE NAME: 57414_XS_LemnahDrive.dgn	PLOT DATE: 3/4/2016
PROJECT LEADER: M.A. COLGAN	DRAWN BY: M.C. SCOTT
DESIGNED BY: M.C. SCOTT	CHECKED BY: ------
CROSS SECTIONS	SHEET 161 OF 230

VHB 57414.00

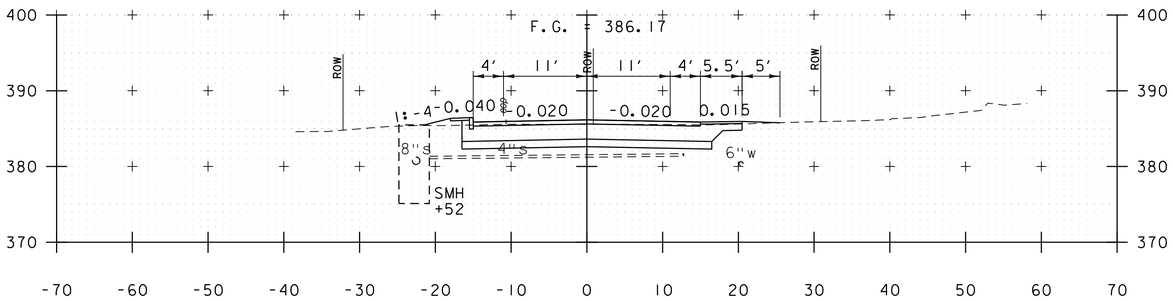

314+50

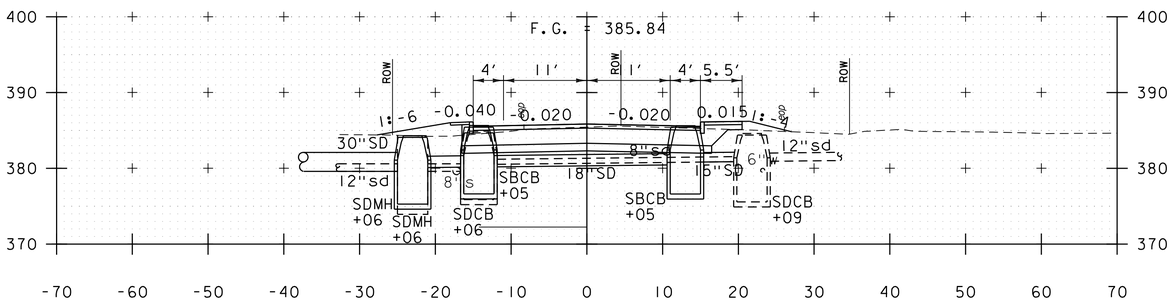

314+00

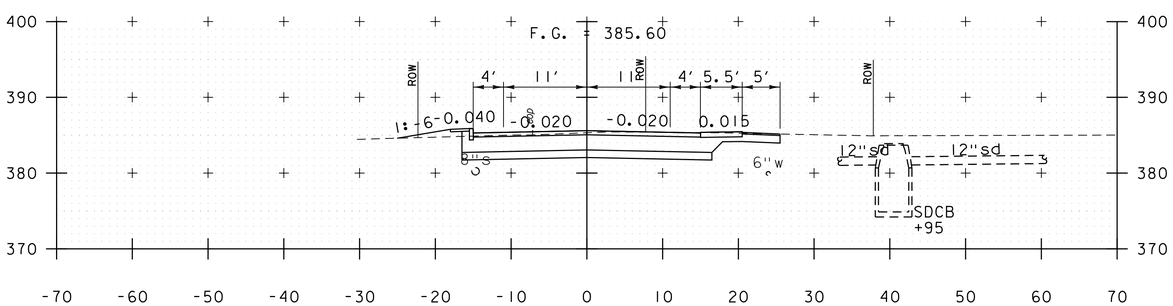

313+63

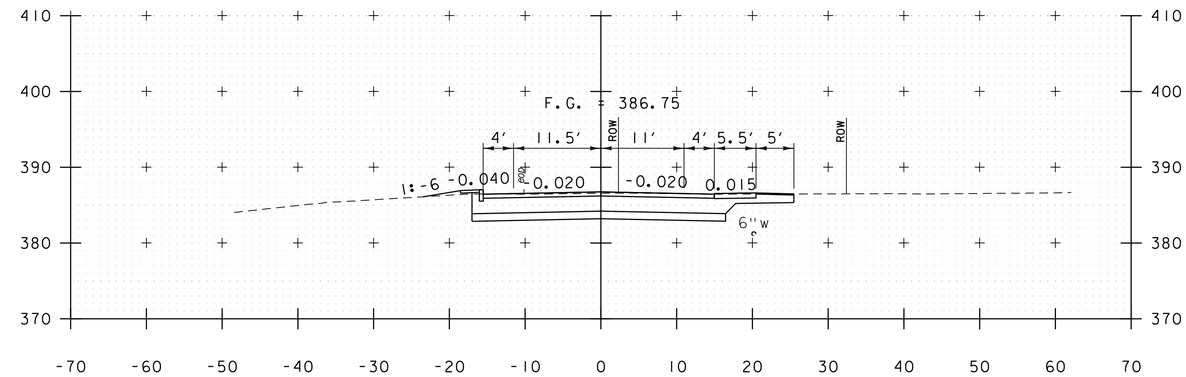

315+50

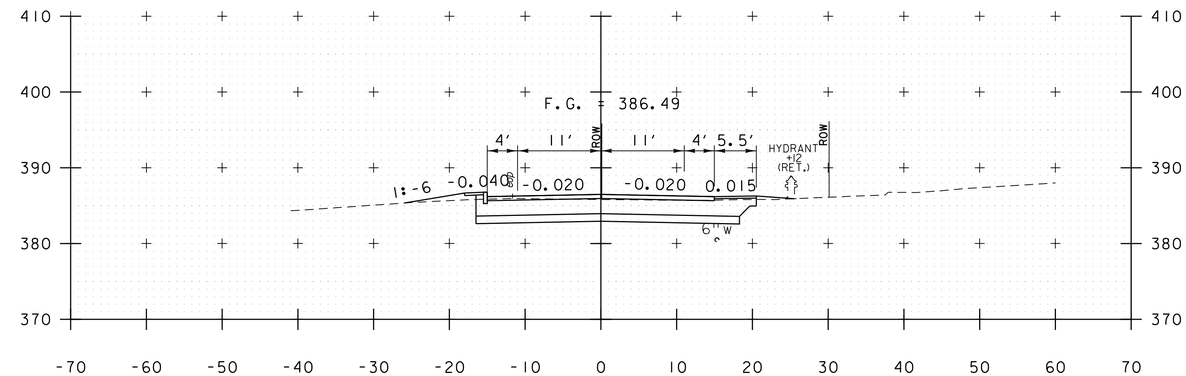

315+00

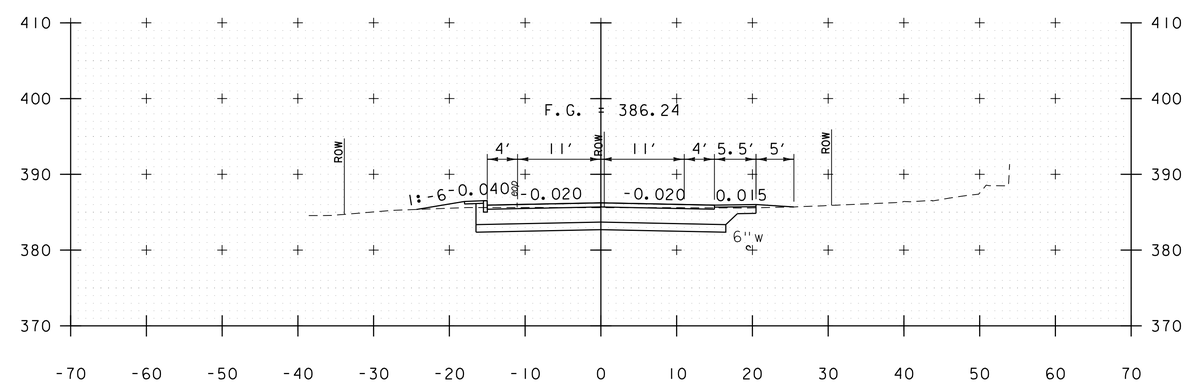

314+61

LEMNAH DRIVE

PROJECT NAME: ST. ALBANS	
PROJECT NUMBER: HPP 8000(17)	
FILE NAME: 57414_XS_LemnahDrive.dgn	PLOT DATE: 3/4/2016
PROJECT LEADER: M.A. COLGAN	DRAWN BY: M.C. SCOTT
DESIGNED BY: M.C. SCOTT	CHECKED BY: ------
CROSS SECTIONS	SHEET 162 OF 230

VHB 57414.00

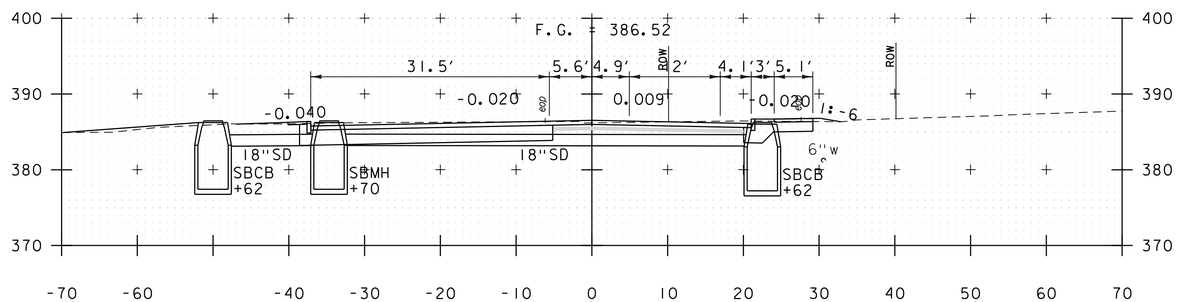

316+50

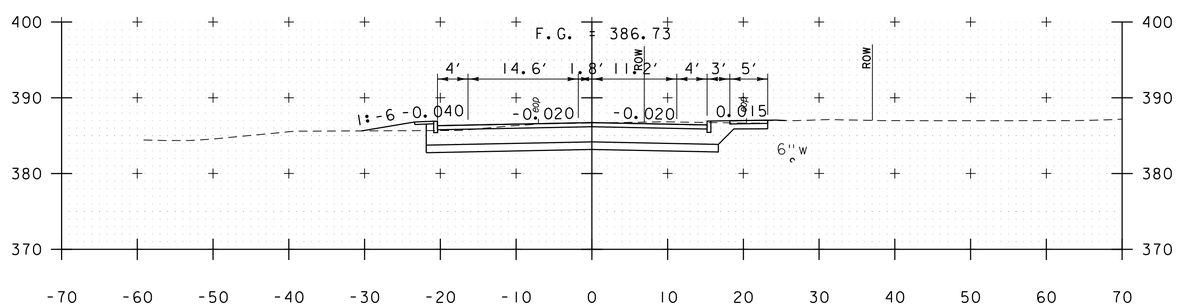

316+00

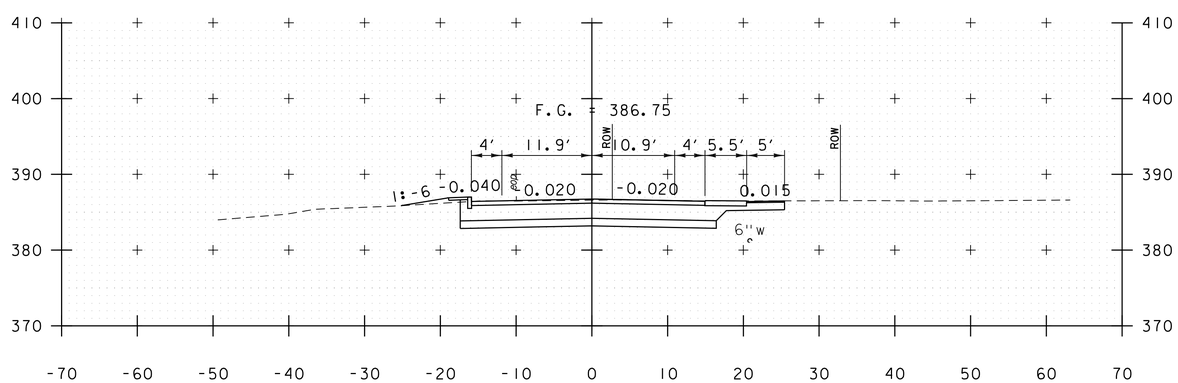

315+55

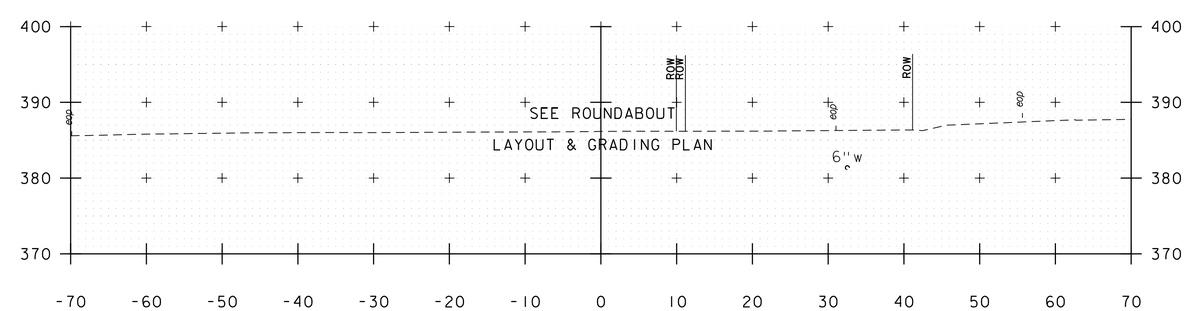

317+00

LEMNAH DRIVE

PROJECT NAME: ST. ALBANS	
PROJECT NUMBER: HPP 8000(17)	
FILE NAME: 57414_XS_LemnahDrive.dgn	PLOT DATE: 3/4/2016
PROJECT LEADER: M.A. COLGAN	DRAWN BY: M.C. SCOTT
DESIGNED BY: M.C. SCOTT	CHECKED BY: ------
CROSS SECTIONS	SHEET 163 OF 230

VHB 57414.00

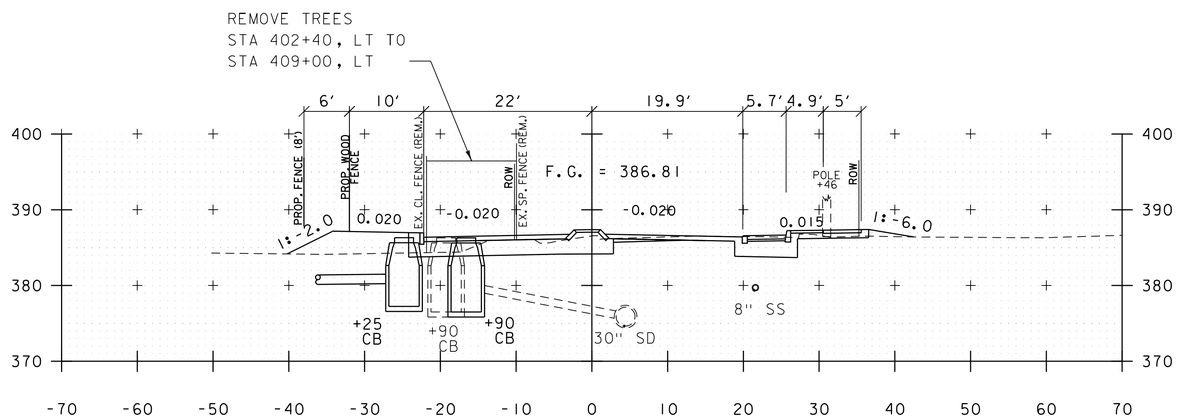

402+50

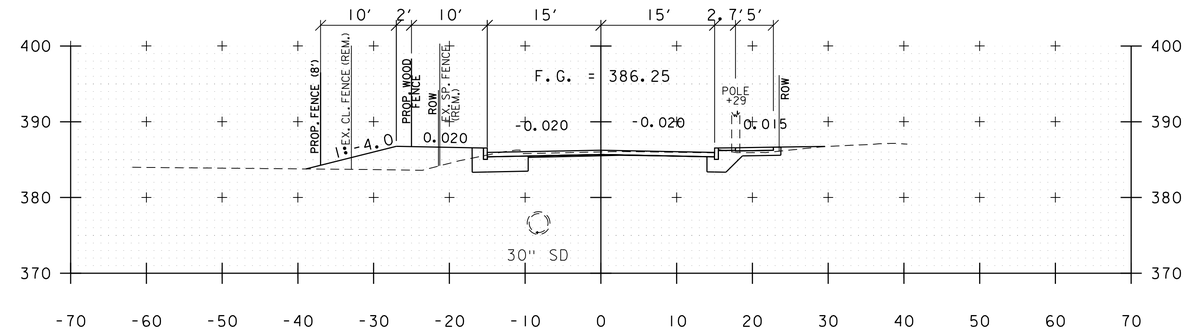

404+00

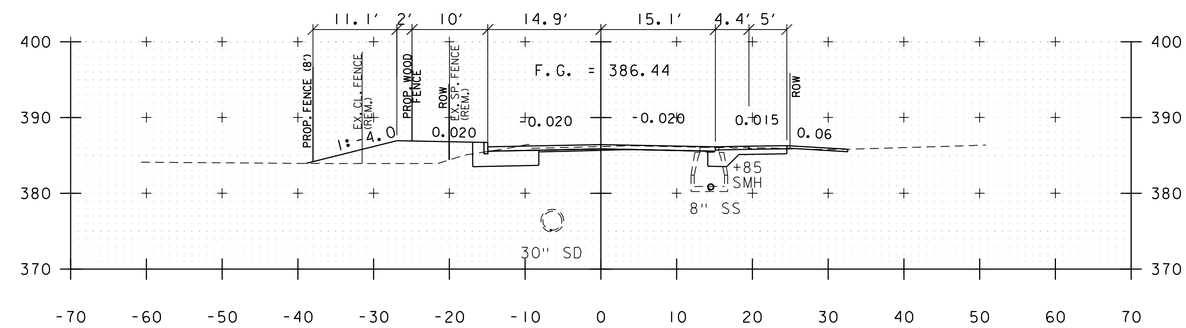

403+50

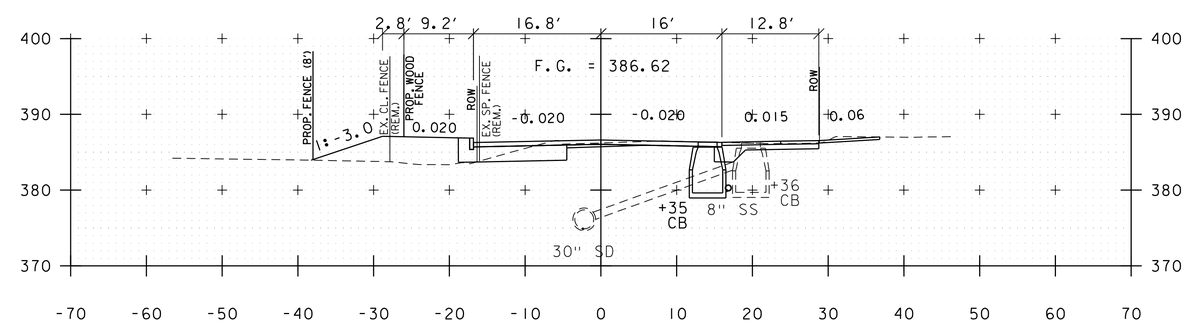

403+00

ALLEN STREET

PROJECT NAME: ST. ALBANS	
PROJECT NUMBER: HPP 8000(17)	
FILE NAME: 57414_XS_AllenCatherine.dgn	PLOT DATE: 3/4/2016
PROJECT LEADER: J.D. SALADINO	DRAWN BY: G.A. GOMEZ
DESIGNED BY: D.M. PECK	CHECKED BY: M.J. SERVETAS
CROSS SECTION SHEET X OF XX	SHEET 164 OF 230

VHB 57414.00

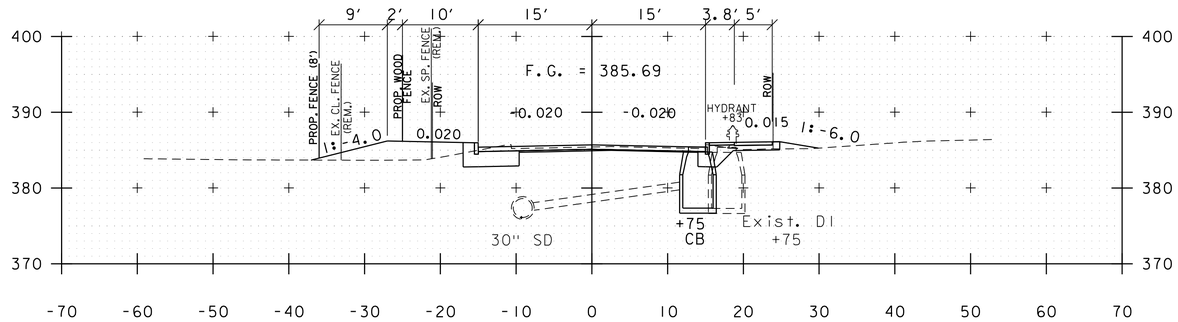

405+50

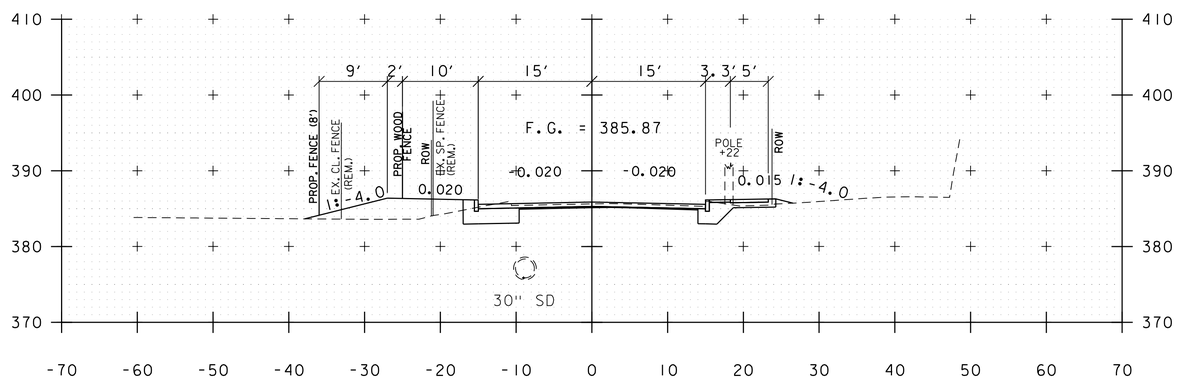

405+00

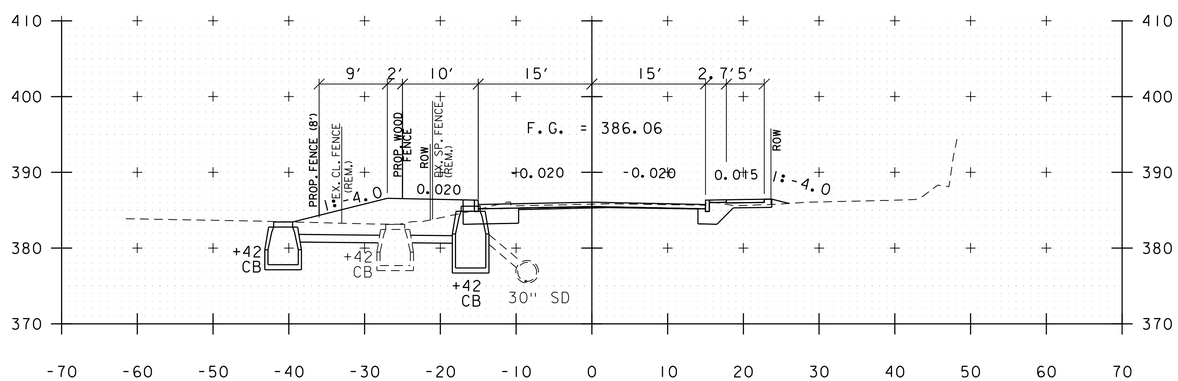

404+50

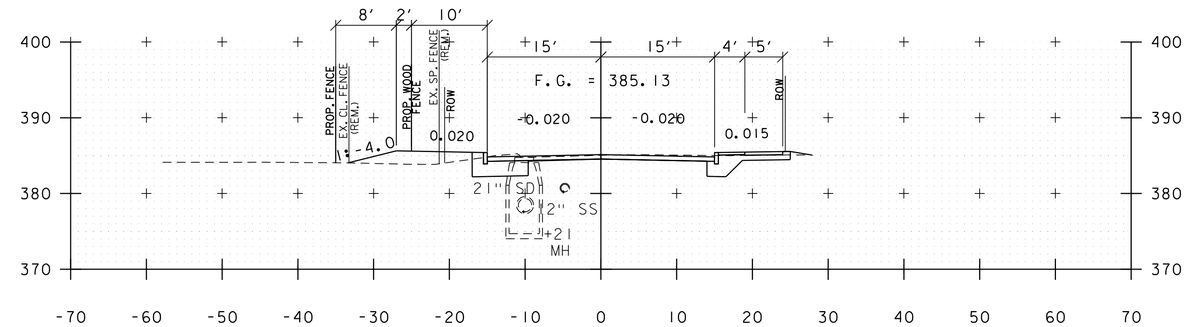

407+00

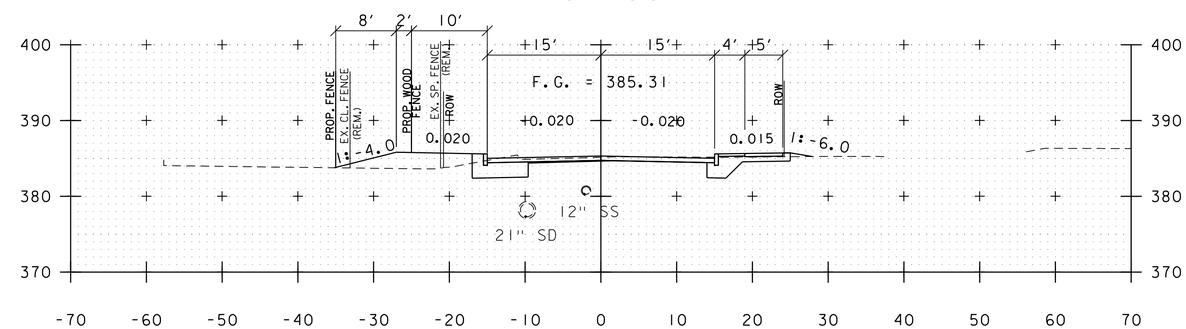

406+50

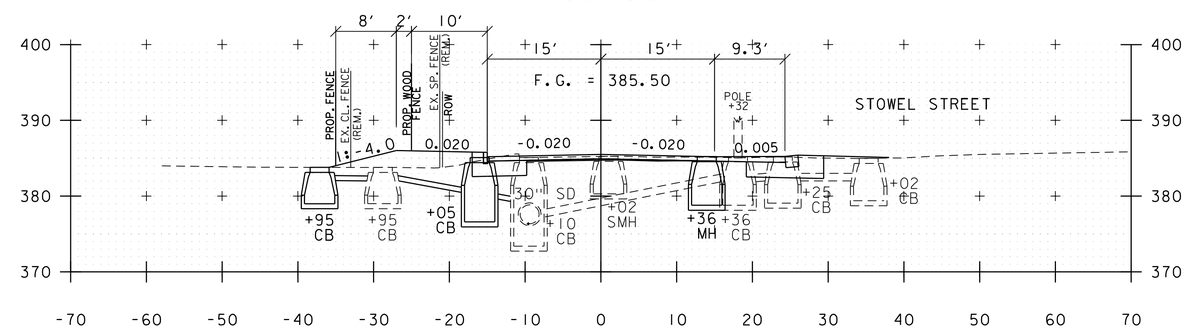

406+00

ALLEN STREET

PROJECT NAME: ST. ALBANS	
PROJECT NUMBER: HPP 8000(17)	
FILE NAME: 57414_XS_AllenCatherine.dgn	PLOT DATE: 3/4/2016
PROJECT LEADER: J.D. SALADINO	DRAWN BY: G.A. GOMEZ
DESIGNED BY: D.M. PECK	CHECKED BY: M.J. SERVETAS
CROSS SECTION SHEET X OF XX	SHEET 165 OF 230

VHB 57414.00

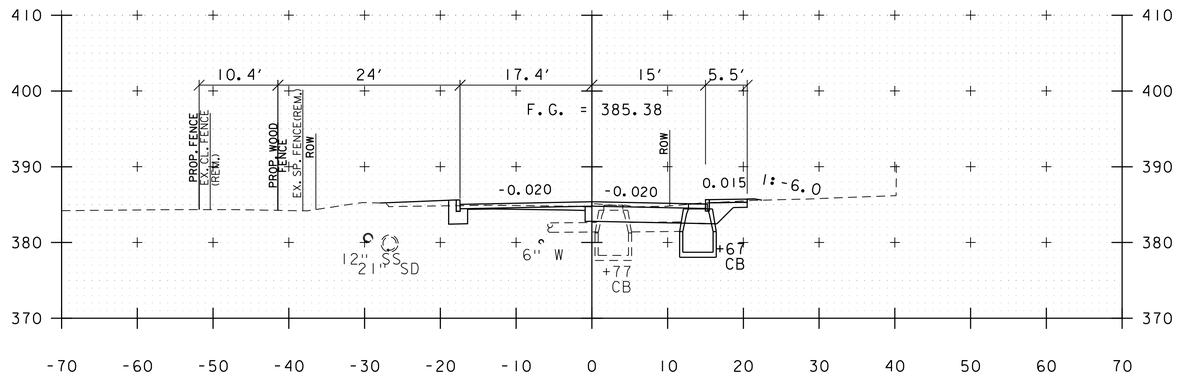

408+50

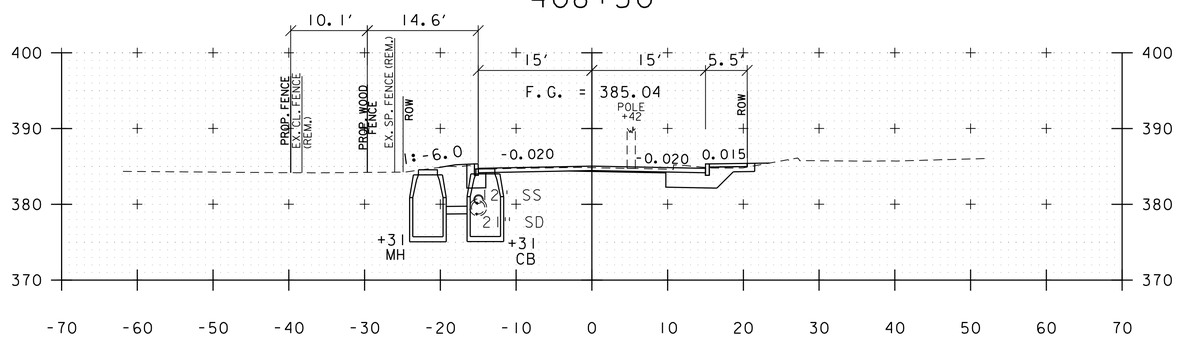

408+00

407+50

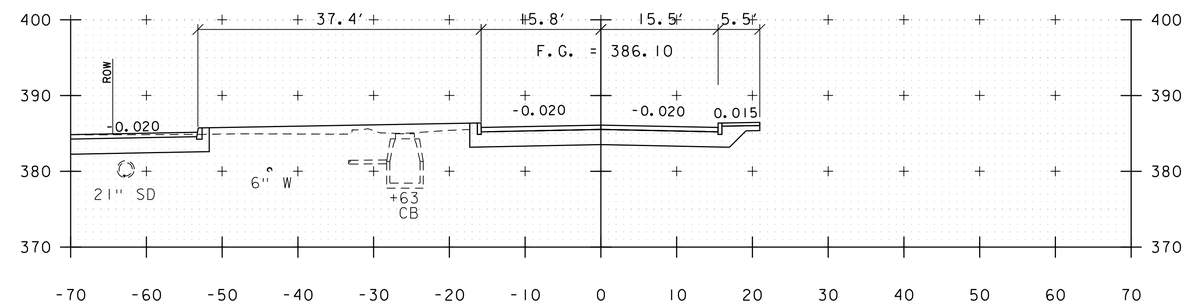

409+50

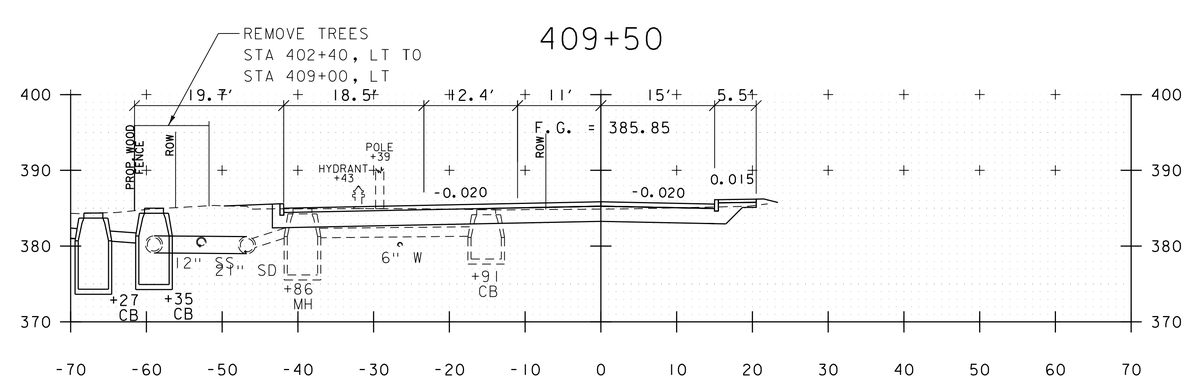

409+00

ALLEN STREET

PROJECT NAME:	ST. ALBANS
PROJECT NUMBER:	HPP 8000(17)

FILE NAME: 57414_XS_AllenCatherine.dgn	PLOT DATE: 3/4/2016
PROJECT LEADER: J.D. SALADINO	DRAWN BY: G.A. GOMEZ
DESIGNED BY: D.M. PECK	CHECKED BY: M.J. SERVETAS
CROSS SECTION SHEET X OF XX	SHEET 166 OF 230

vhb

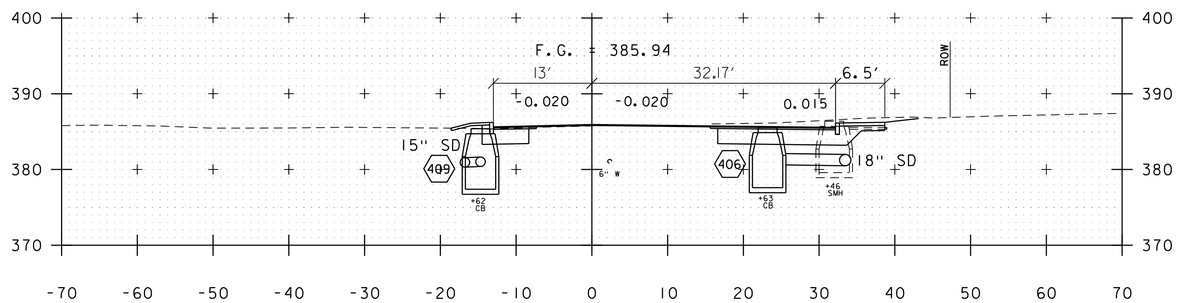

410+50

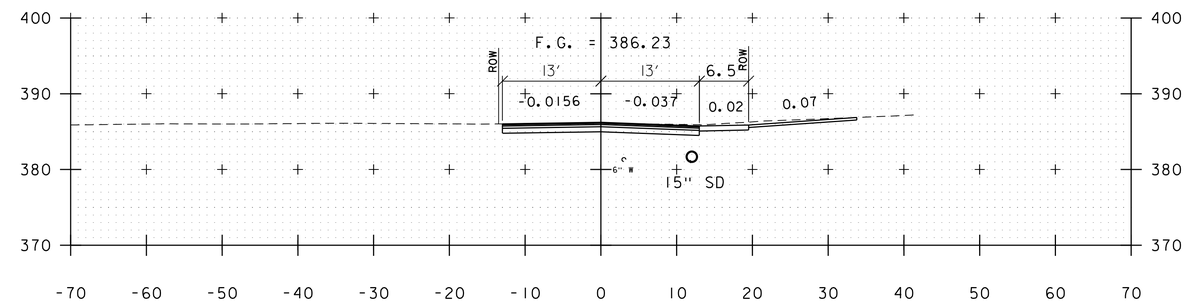

411+25

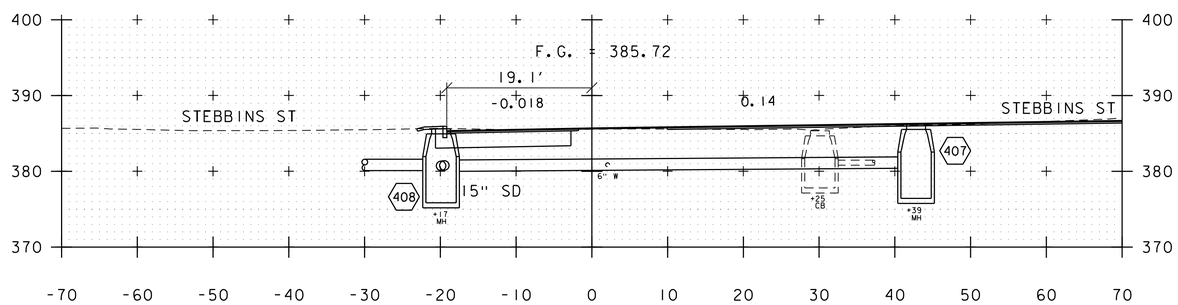

410+25

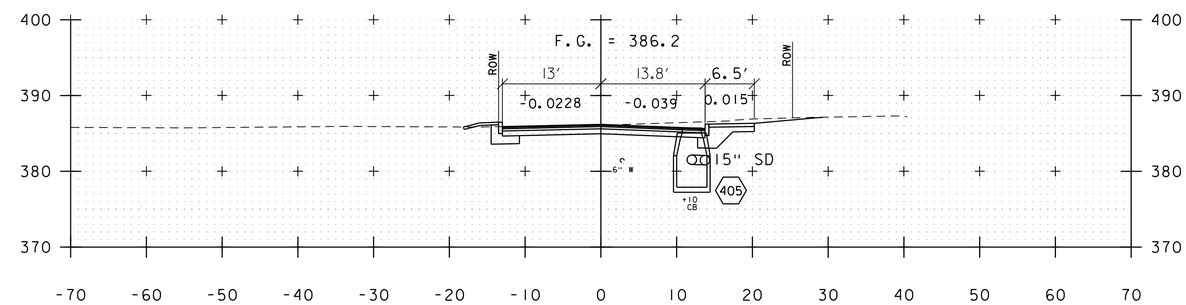

411+00

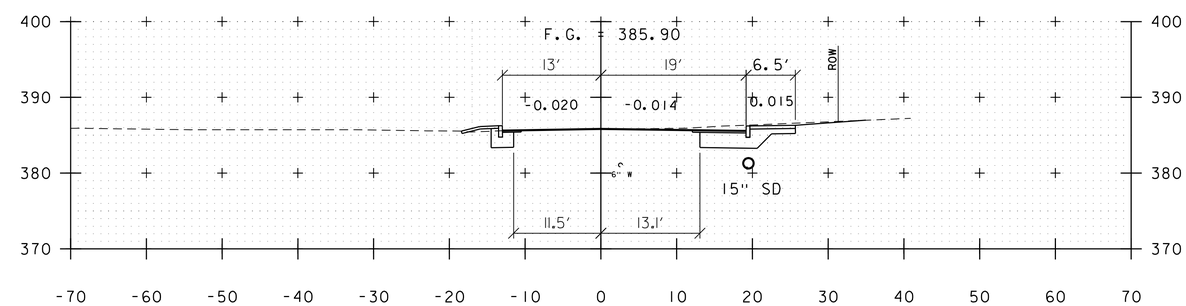

410+75

CATHERINE STREET

PROJECT NAME: ST. ALBANS	
PROJECT NUMBER: HPP 8000(17)	
FILE NAME: $$FILES$$	PLOT DATE: 3/4/2016
PROJECT LEADER: J.D. SALADINO	DRAWN BY: G.A. GOMEZ
DESIGNED BY: G.A. GOMEZ	CHECKED BY: M.J. SERVETAS
CROSS SECTION SHEET X OF XX	SHEET 167 OF 230

VHB 57414.00

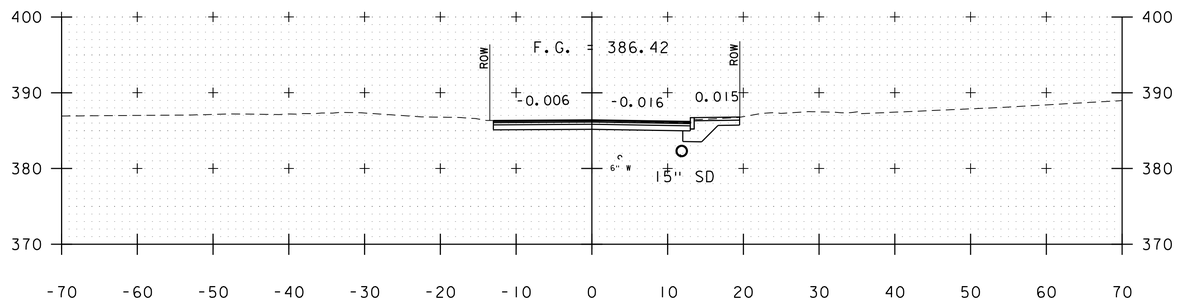

412+00

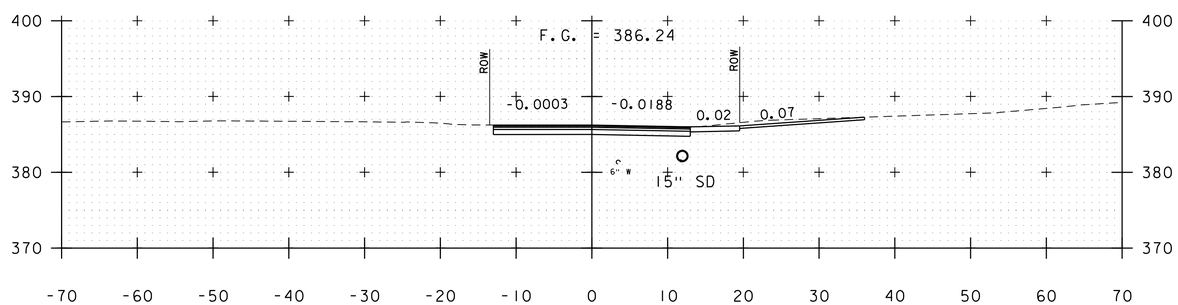

411+75

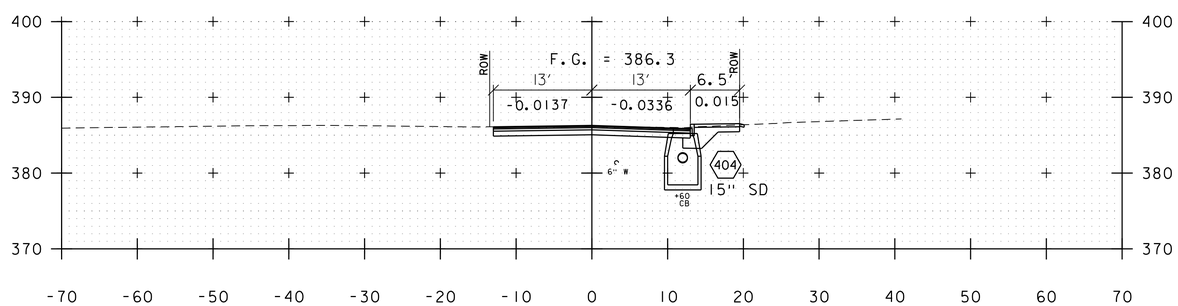

411+50

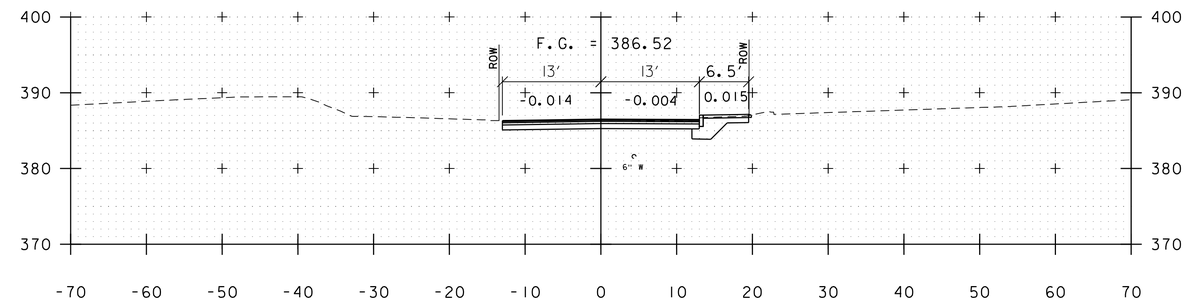

412+75

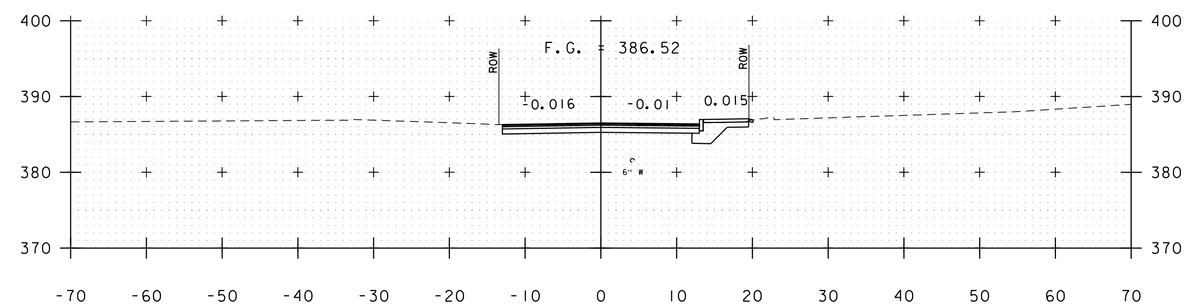

412+50

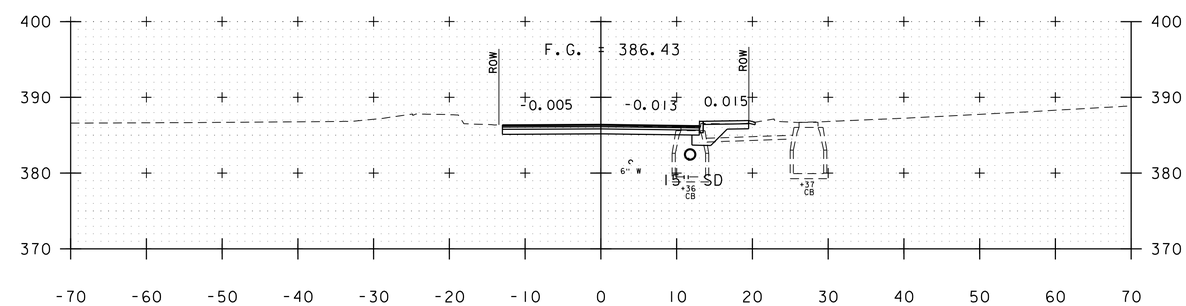

412+25

CATHERINE STREET

PROJECT NAME: ST. ALBANS	
PROJECT NUMBER: HPP 8000(17)	
FILE NAME: $$FILES$$	PLOT DATE: 3/4/2016
PROJECT LEADER: J.D. SALADINO	DRAWN BY: G.A. GOMEZ
DESIGNED BY: G.A. GOMEZ	CHECKED BY: M.J. SERVETAS
CROSS SECTION SHEET X OF XX	SHEET 168 OF 230

VHB 57414.00

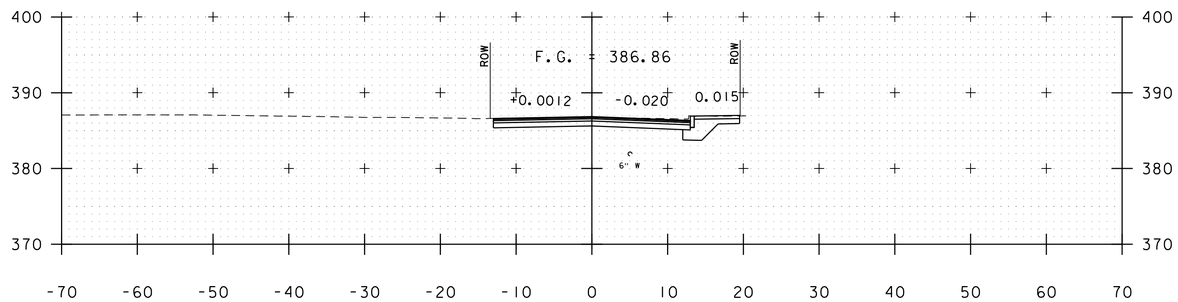

413+50

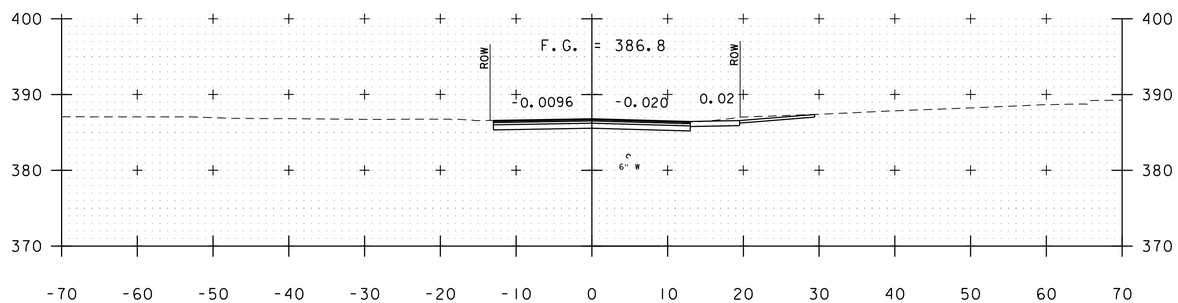

413+25

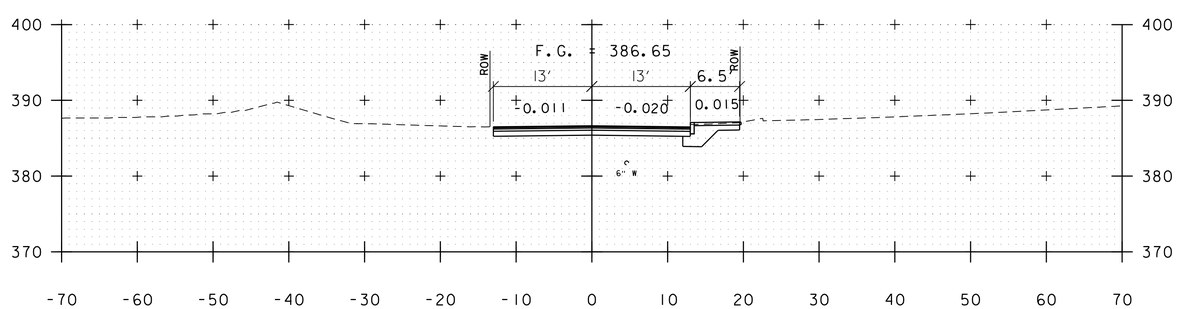

413+00

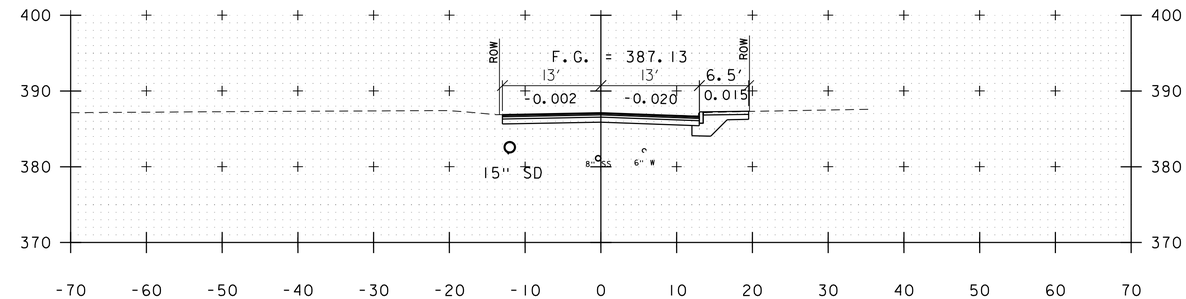

414+25

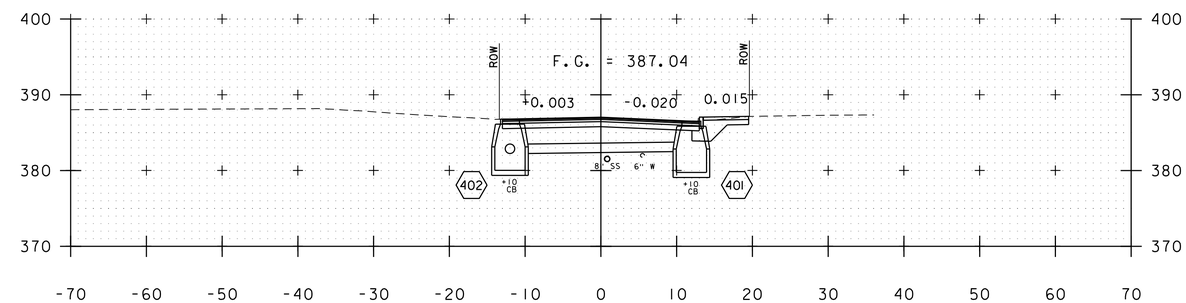

414+00

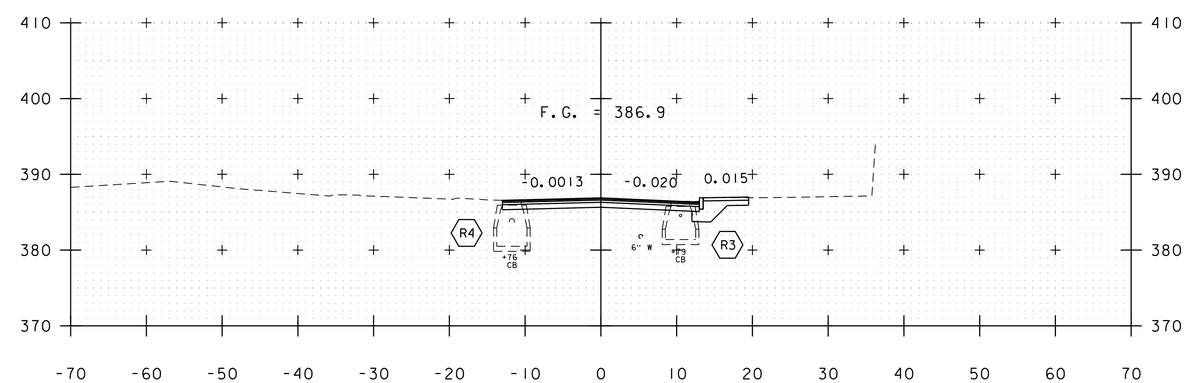

413+75

CATHERINE STREET

PROJECT NAME: ST. ALBANS	
PROJECT NUMBER: HPP 8000(17)	
FILE NAME: $$FILES$$	PLOT DATE: 3/4/2016
PROJECT LEADER: J.D. SALADINO	DRAWN BY: G.A. GOMEZ
DESIGNED BY: G.A. GOMEZ	CHECKED BY: M.J. SERVETAS
CROSS SECTION SHEET X OF XX	SHEET 169 OF 230

VHB 57414.00

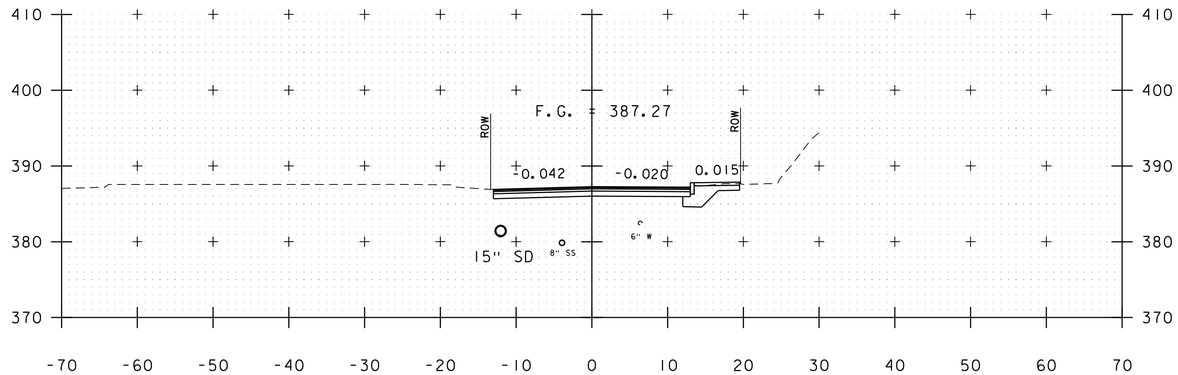

415+00

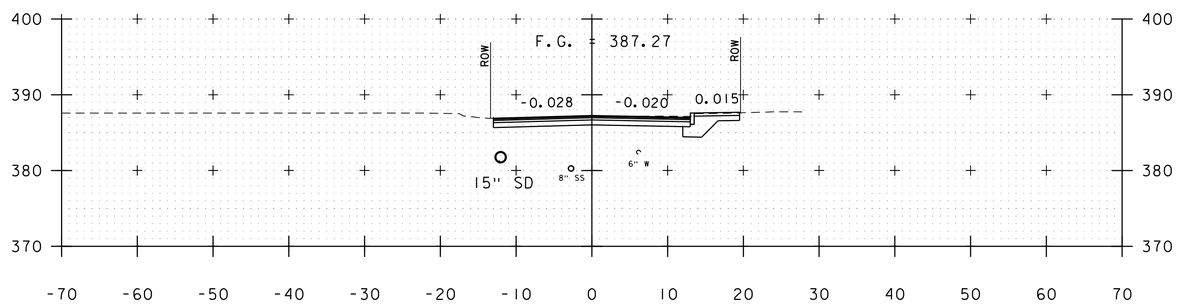

414+75

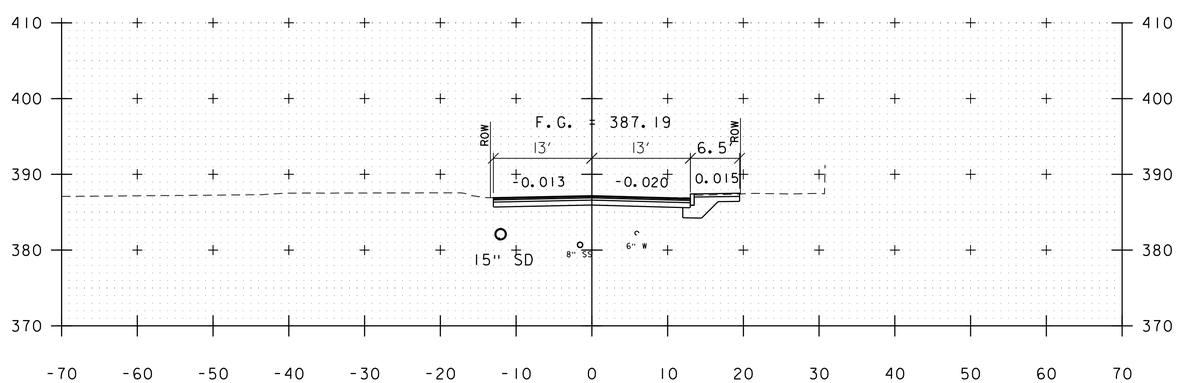

414+50

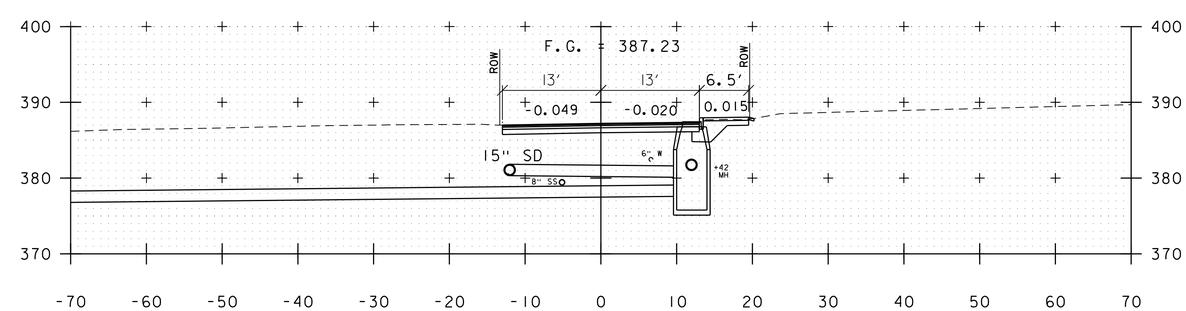

415+25

CATHERINE STREET

PROJECT NAME: ST. ALBANS	
PROJECT NUMBER: HPP 8000(17)	
FILE NAME: $$FILES$$	PLOT DATE: 3/4/2016
PROJECT LEADER: J.D. SALADINO	DRAWN BY: G.A. GOMEZ
DESIGNED BY: G.A. GOMEZ	CHECKED BY: M.J. SERVETAS
CROSS SECTION SHEET X OF XX	SHEET 170 OF 230

VHB 57414.00

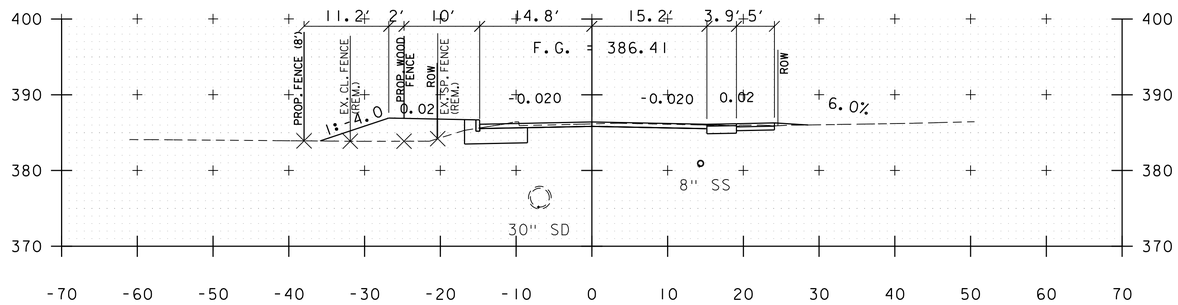

403+58

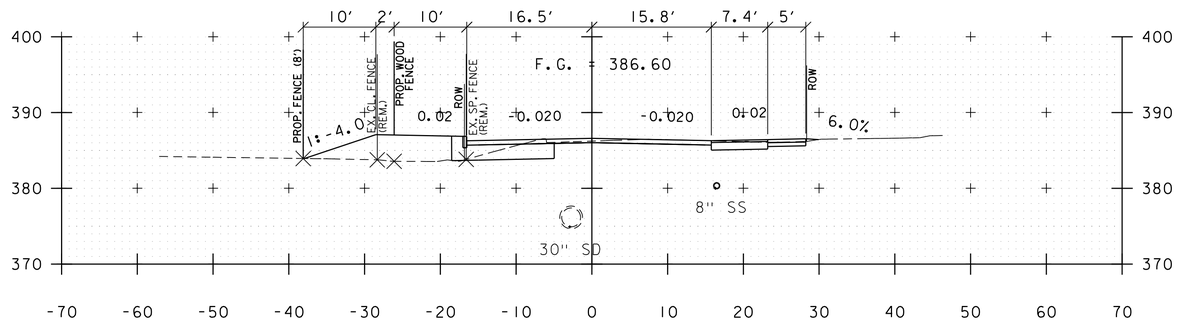

403+05

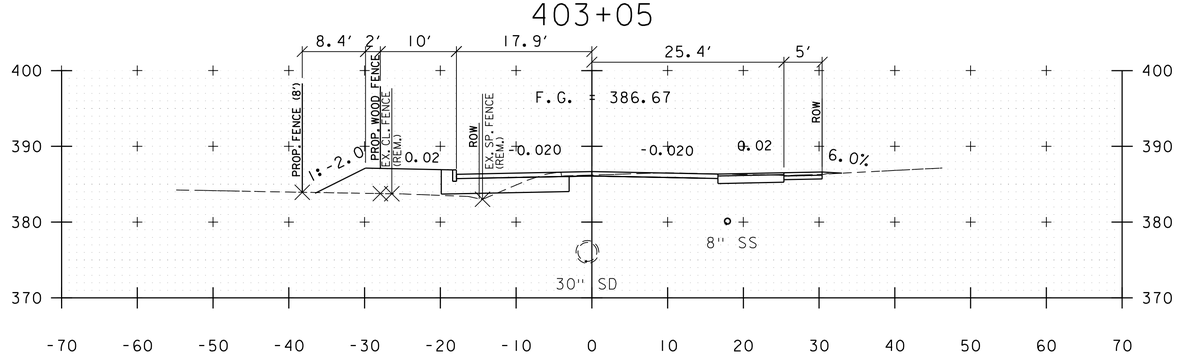

402+86

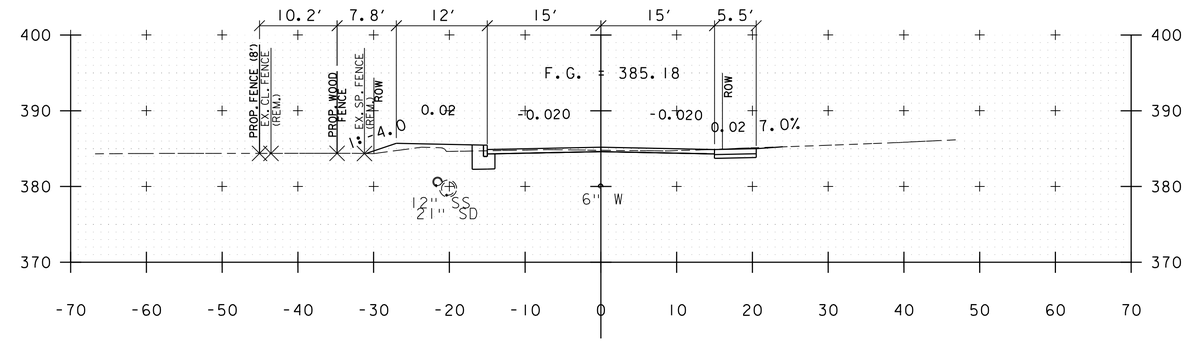

408+26

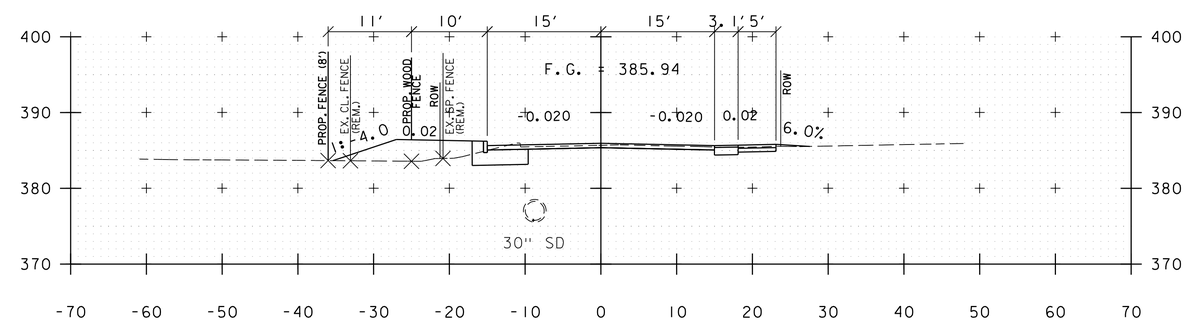

404+83

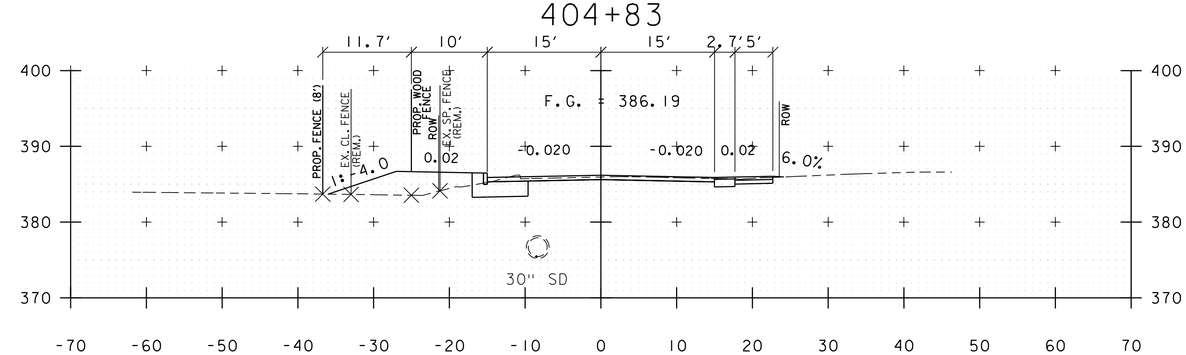

404+15

STA. 402+86 TO STA. 408+26

PROJECT NAME: ST. ALBANS	
PROJECT NUMBER: HPP 8000(17)	
FILE NAME: ppms*/Section/------.dgn	PLOT DATE: 3/4/2016
PROJECT LEADER: M.A. COLGAN	DRAWN BY: G.A. GOMEZ
DESIGNED BY: D.M. PECK	CHECKED BY: ------
CROSS SECTION SHEET X OF XX	SHEET 171 OF 230

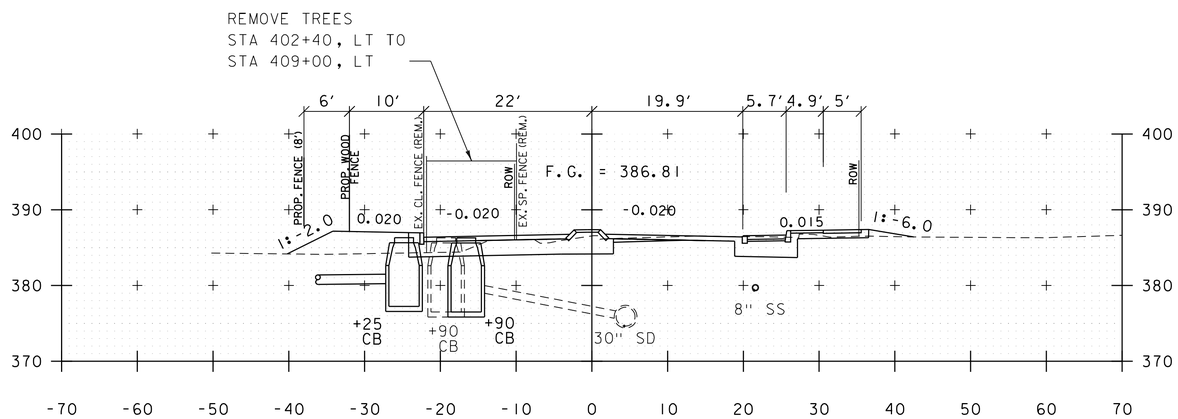

402+50

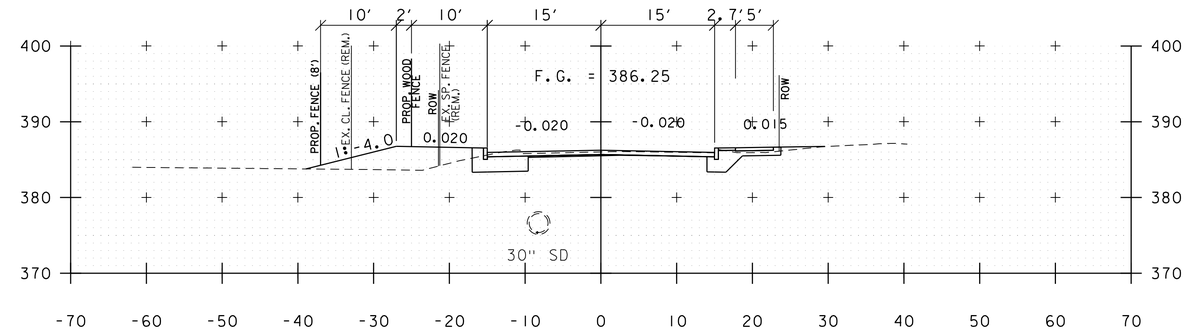

404+00

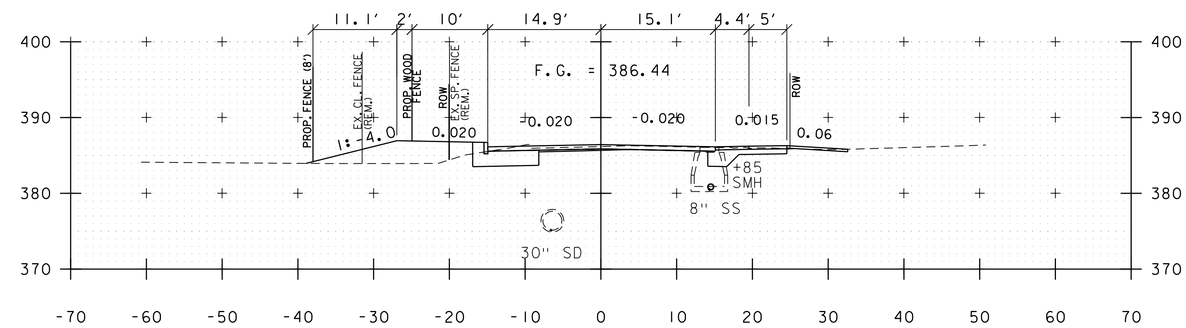

403+50

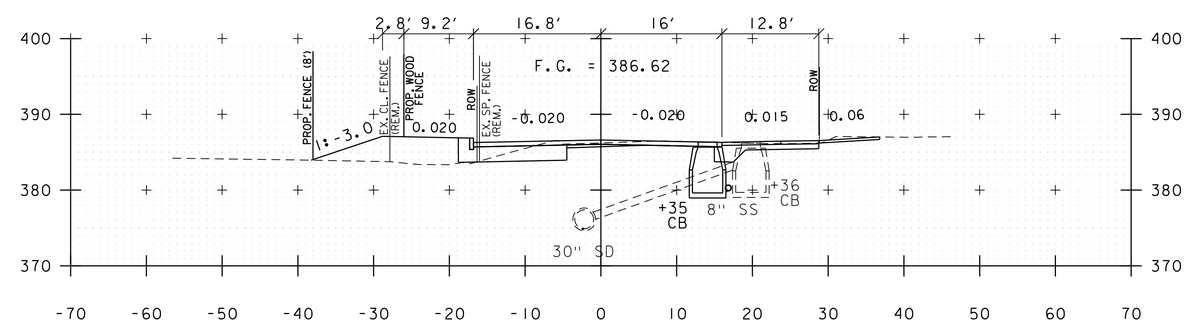

403+00

ALLEN STREET

PROJECT NAME:	ST. ALBANS
PROJECT NUMBER:	HPP 8000(17)

FILE NAME: 57414_XS_AllenDriveways.dgn	PLOT DATE: 3/4/2016
PROJECT LEADER: J.D. SALADINO	DRAWN BY: G.A. GOMEZ
DESIGNED BY: D.M. PECK	CHECKED BY: M.J. SERVETAS
CROSS SECTION SHEET X OF XX	SHEET 172 OF 230

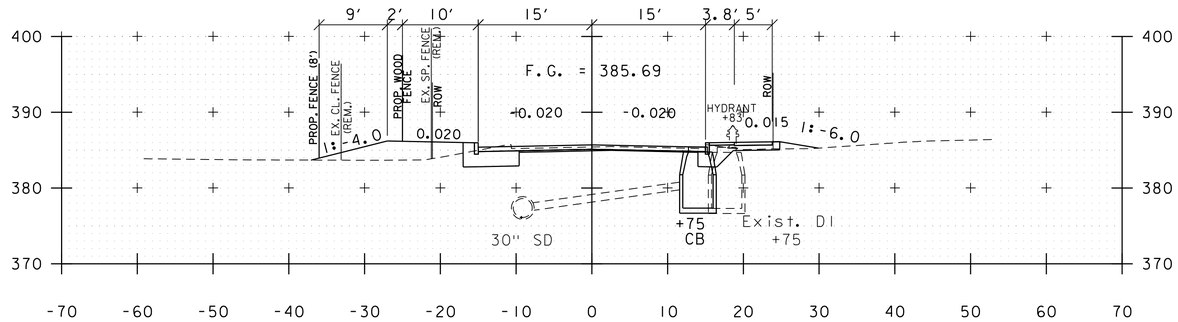

405+50

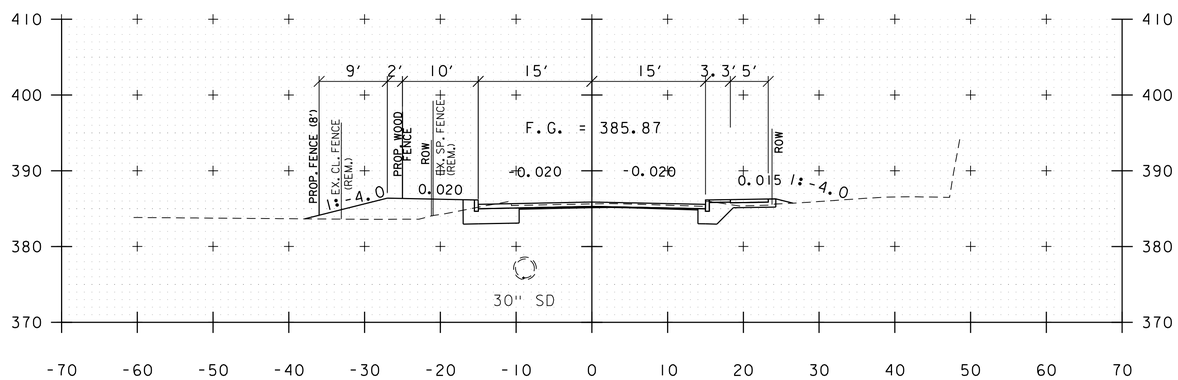

405+00

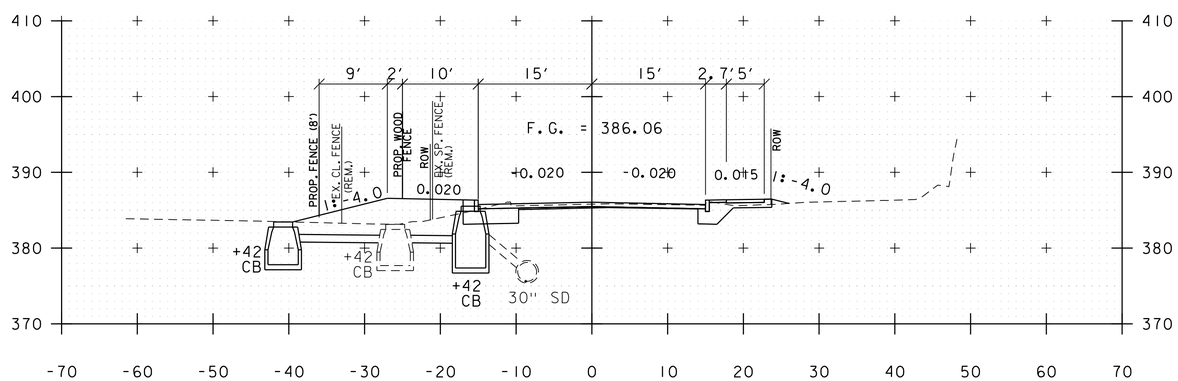

404+50

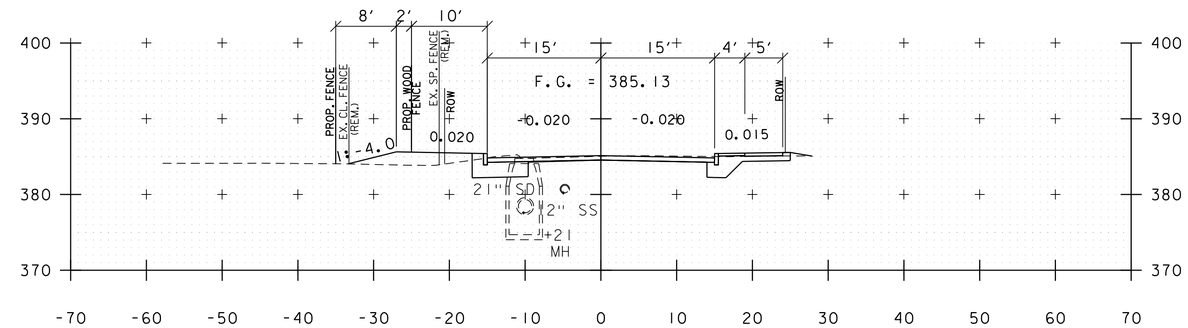

407+00

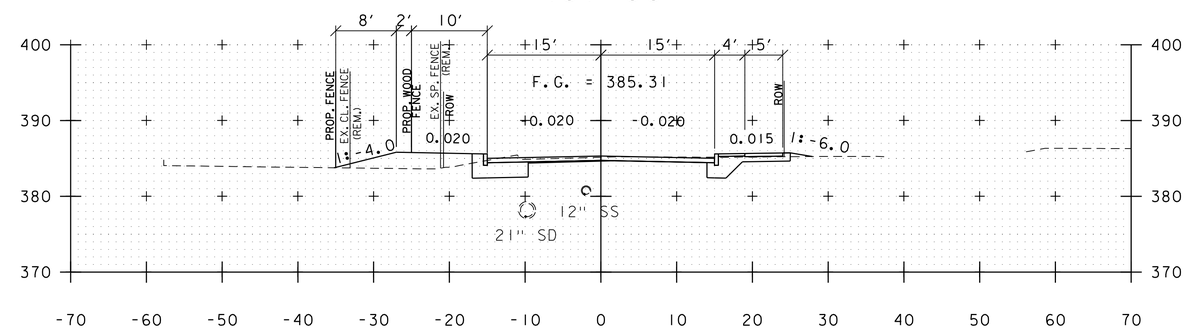

406+50

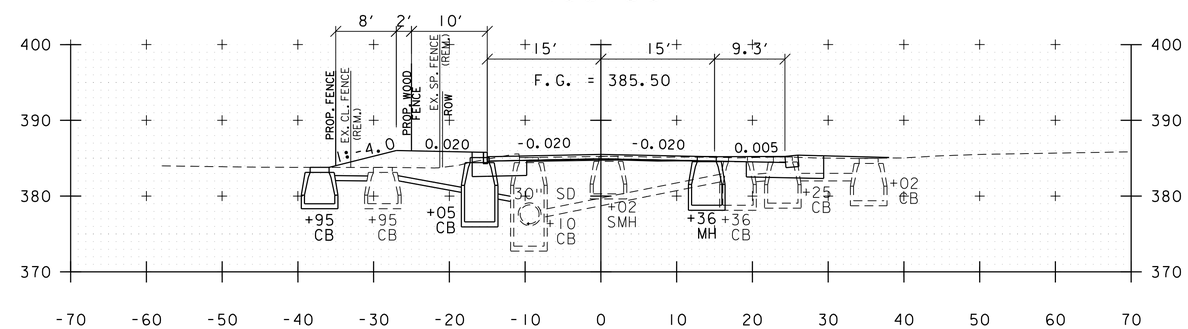

406+00

ALLEN STREET

PROJECT NAME: ST. ALBANS	
PROJECT NUMBER: HPP 8000(17)	
FILE NAME: 57414_XS_AllenDriveways.dgn	PLOT DATE: 3/4/2016
PROJECT LEADER: J.D. SALADINO	DRAWN BY: G.A. GOMEZ
DESIGNED BY: D.M. PECK	CHECKED BY: M.J. SERVETAS
CROSS SECTION SHEET X OF XX	SHEET 173 OF 230

VHB 57414.00

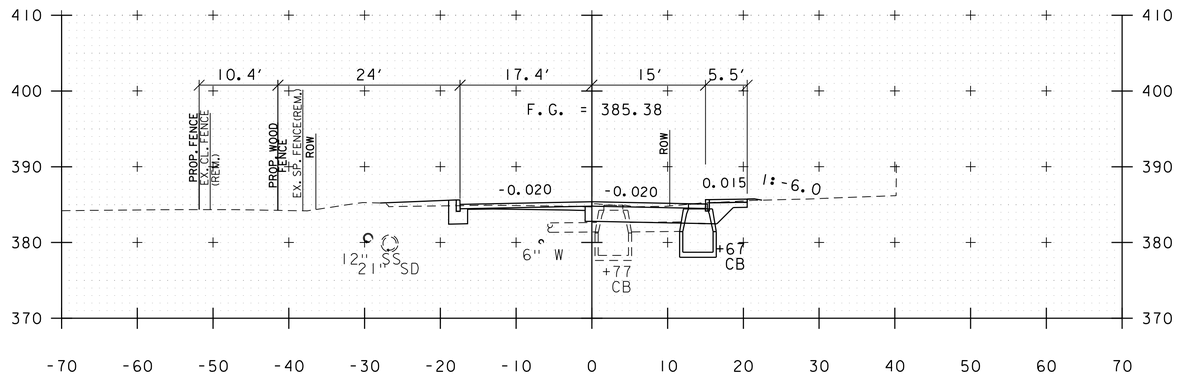

408+50

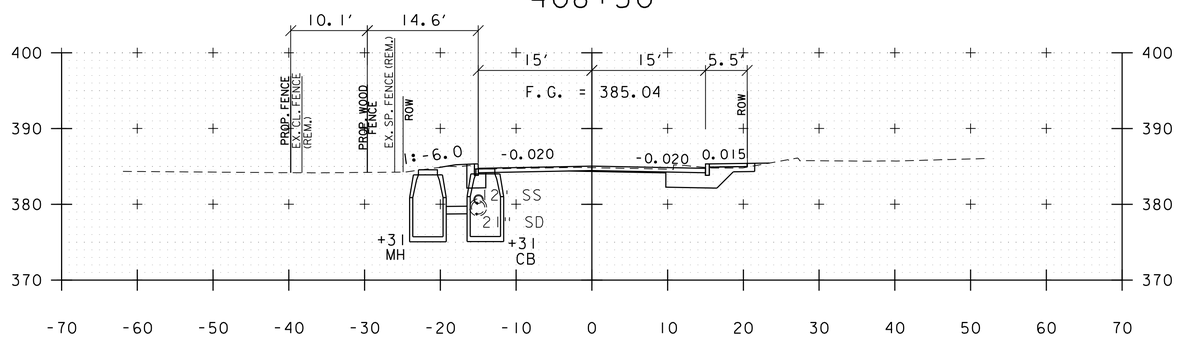

408+00

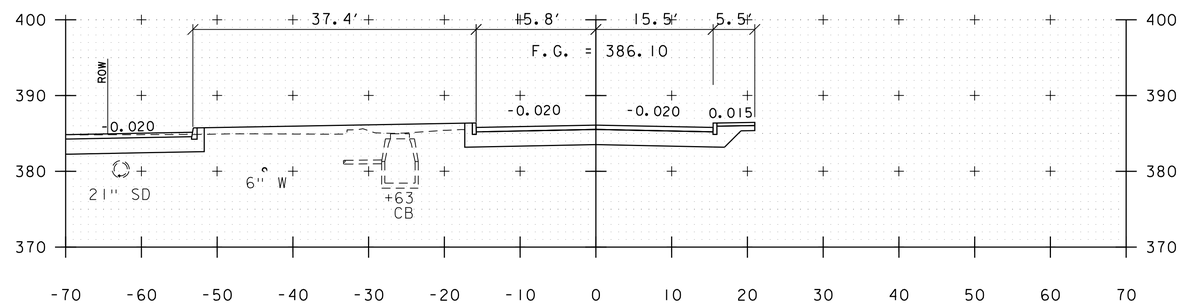

409+50

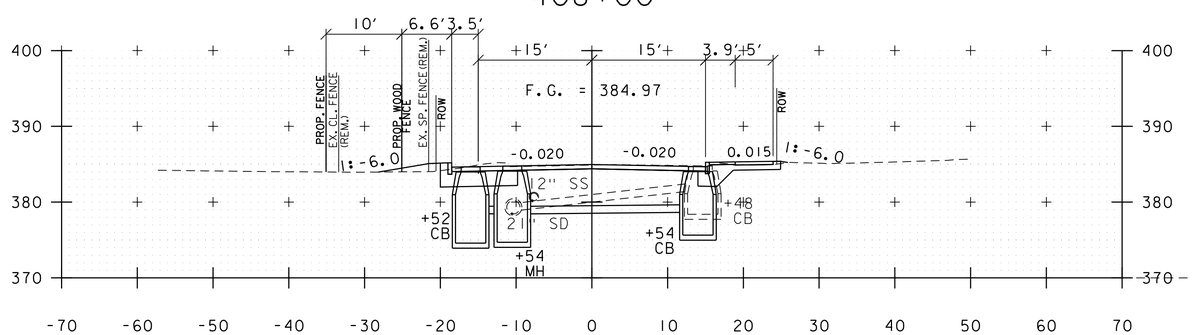

407+50

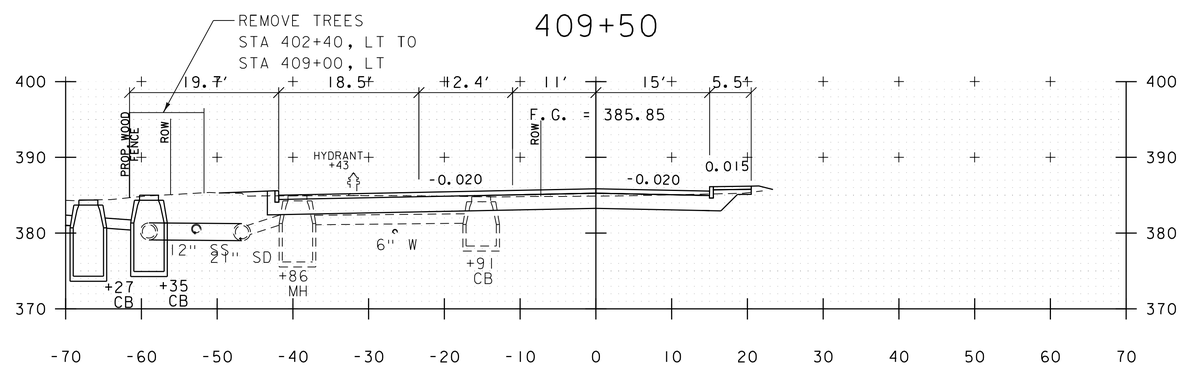

409+00

ALLEN STREET

PROJECT NAME: ST. ALBANS	
PROJECT NUMBER: HPP 8000(17)	
FILE NAME: 57414_XS_AllenDriveways.dgn	PLOT DATE: 3/4/2016
PROJECT LEADER: J.D. SALADINO	DRAWN BY: G.A. GOMEZ
DESIGNED BY: D.M. PECK	CHECKED BY: M.J. SERVETAS
CROSS SECTION SHEET X OF XX	SHEET 174 OF 230

VHB 57414.00

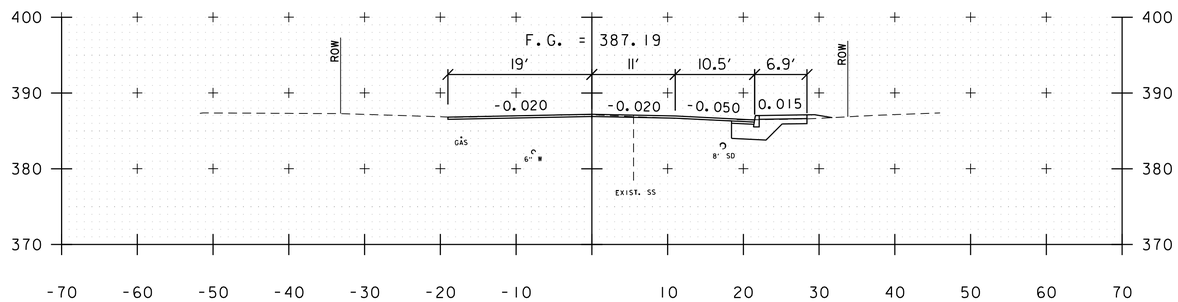

STATION 500+28
BEGIN CONSTRUCTION

500+50

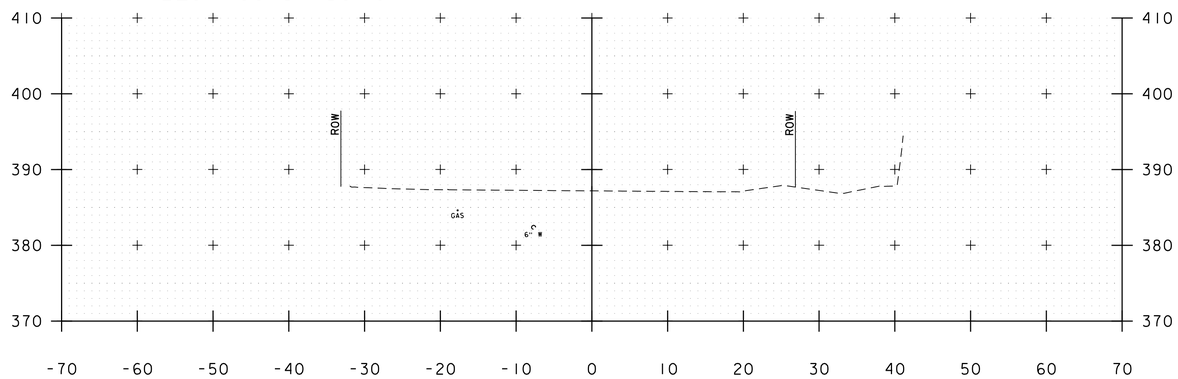

500+25

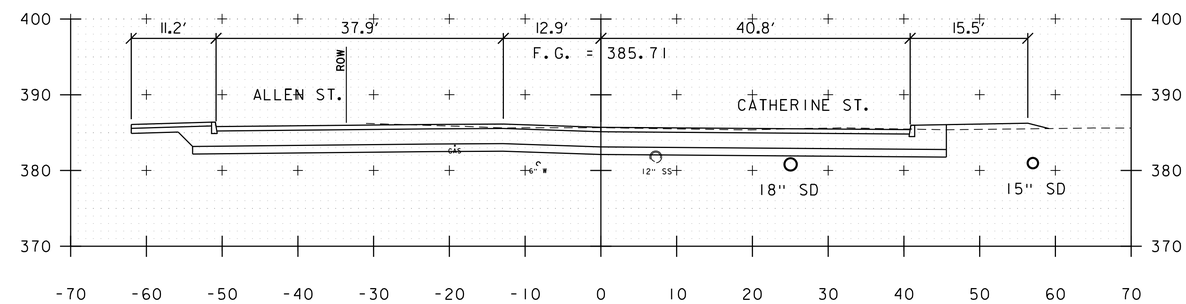

501+25

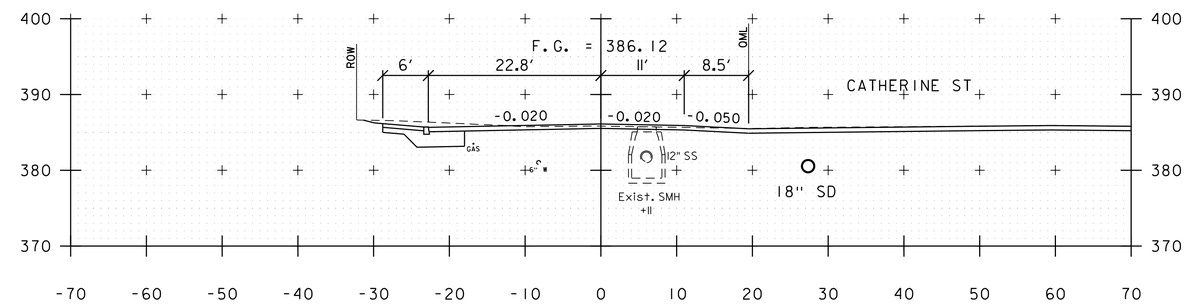

501+00

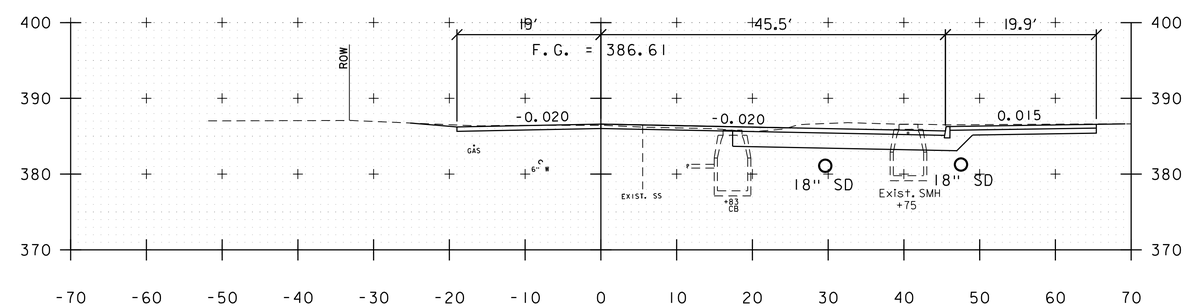

500+75

STEBBINS/MARKET STREET

PROJECT NAME: ST. ALBANS	
PROJECT NUMBER: HPP 8000(17)	
FILE NAME: 57414_XS_Market.dgn	PLOT DATE: 3/4/2016
PROJECT LEADER: J.D. SALADINO	DRAWN BY: G.A. GOMEZ
DESIGNED BY: G.A. GOMEZ	CHECKED BY: M.J. SERVETAS
CROSS SECTIONS	SHEET 175 OF 230

VHB 57414.00

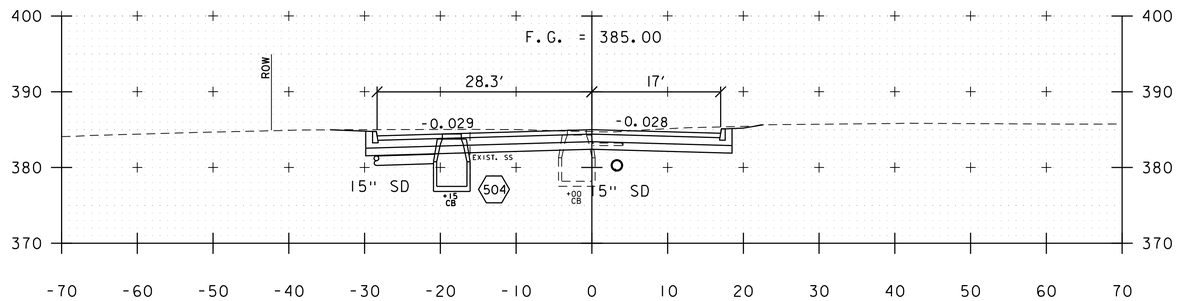

502+00

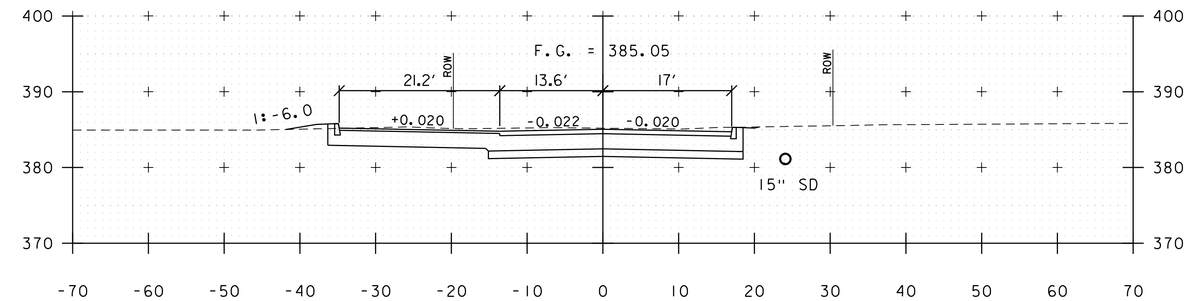

502+75

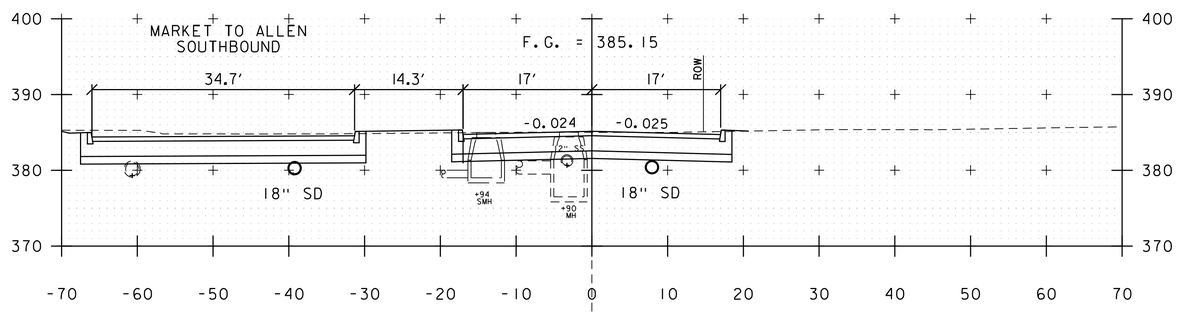

501+75

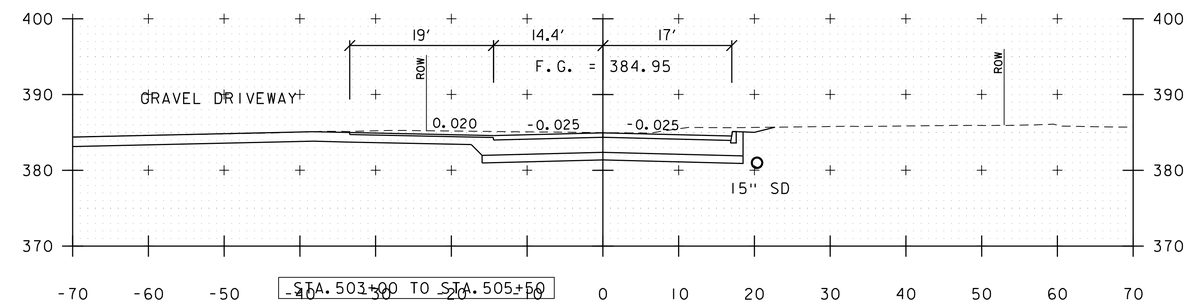

502+50

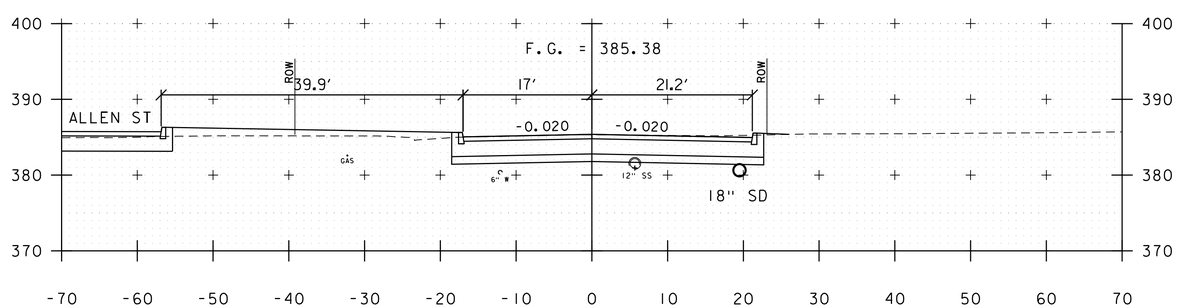

501+50

STATION 501+40
BEGIN FULL DEPTH
CONSTRUCTION

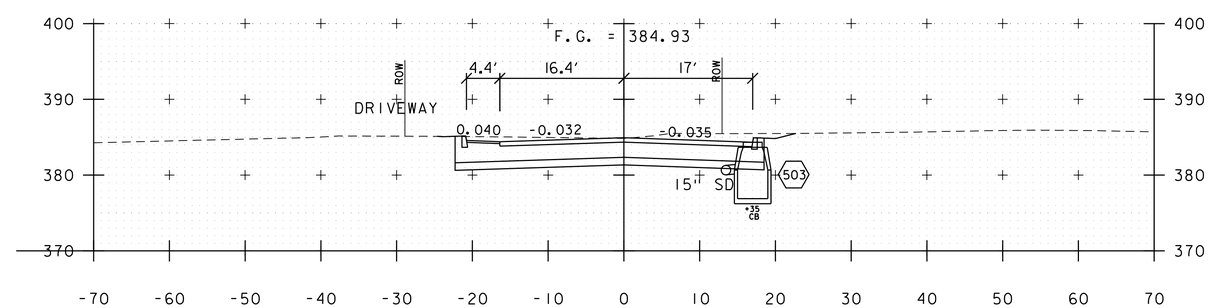

502+25

STEBBINS/MARKET STREET

PROJECT NAME: ST. ALBANS	
PROJECT NUMBER: HPP 8000(17)	
FILE NAME: 57414_XS_Market.dgn	PLOT DATE: 3/4/2016
PROJECT LEADER: J.D. SALADINO	DRAWN BY: G.A. GOMEZ
DESIGNED BY: G.A. GOMEZ	CHECKED BY: M.J. SERVETAS
CROSS SECTIONS	SHEET 176 OF 230

VHB 57414.00

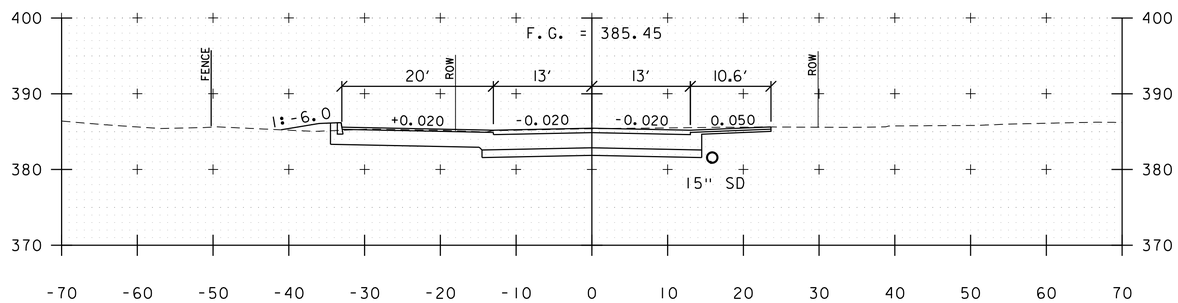

503+50

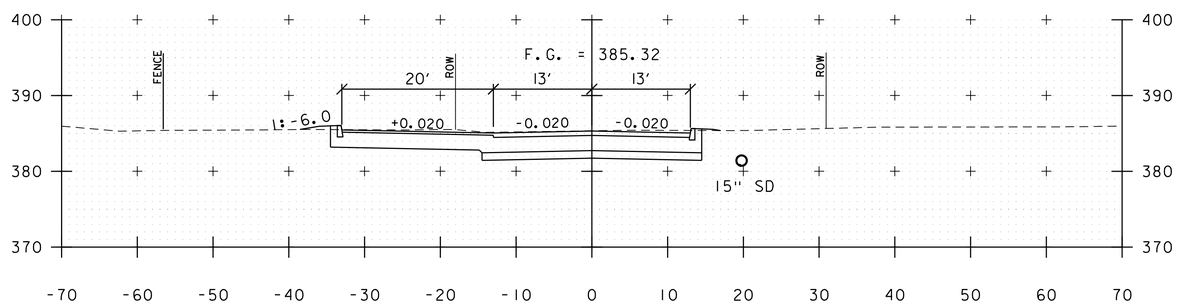

503+25

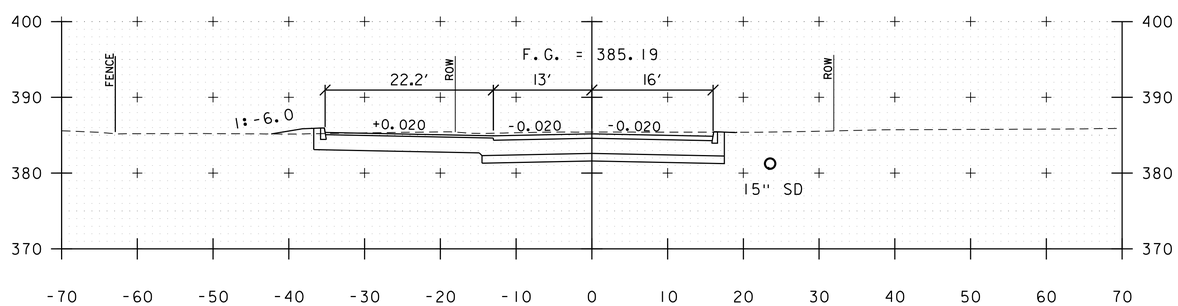

503+00

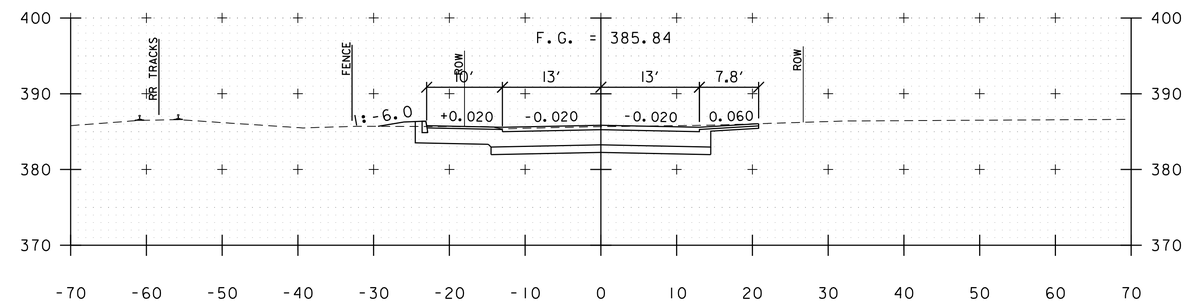

504+25

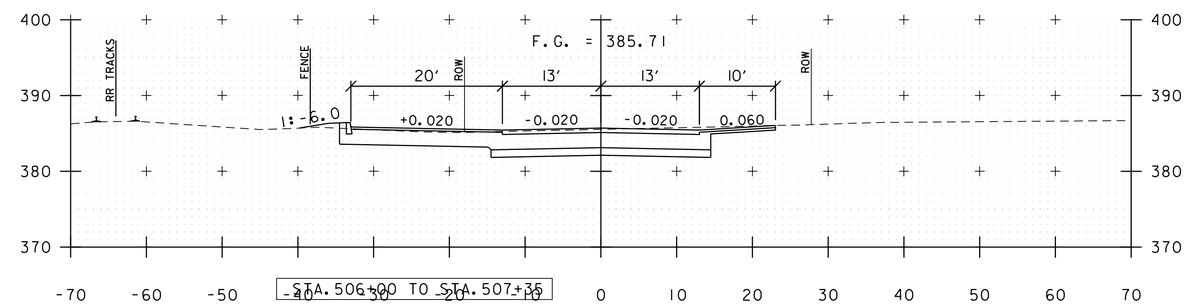

504+00

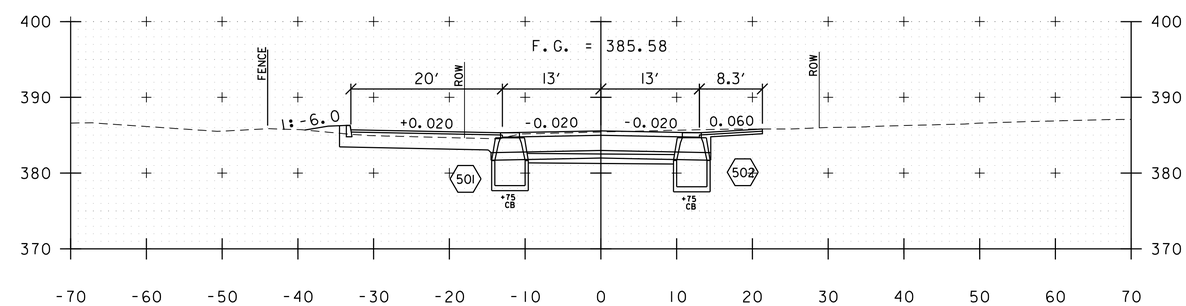

503+75

MARKET STREET

PROJECT NAME: ST. ALBANS	
PROJECT NUMBER: HPP 8000(17)	
FILE NAME: 57414_XS_Market.dgn	PLOT DATE: 3/4/2016
PROJECT LEADER: J.D. SALADINO	DRAWN BY: G.A. GOMEZ
DESIGNED BY: G.A. GOMEZ	CHECKED BY: M.J. SERVETAS
CROSS SECTIONS	SHEET 177 OF 230

VHB 57414.00

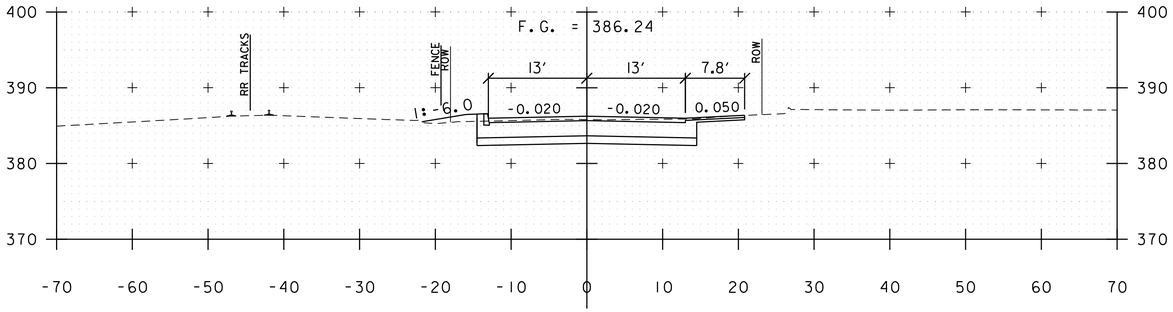

505+00

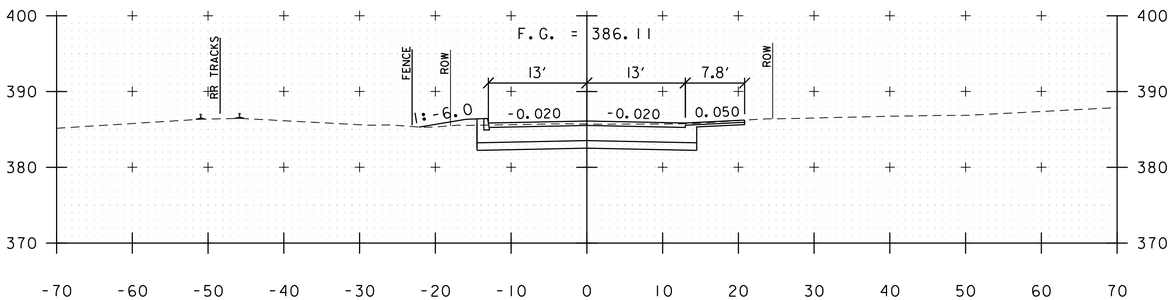

504+75

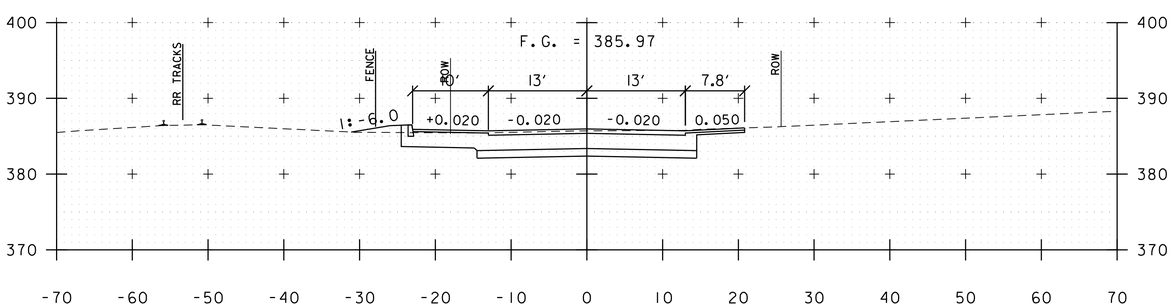

504+50

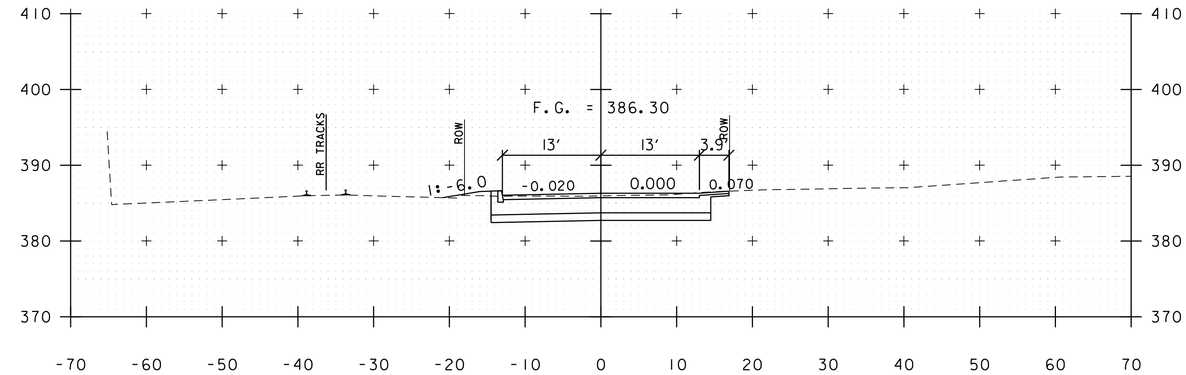

505+75

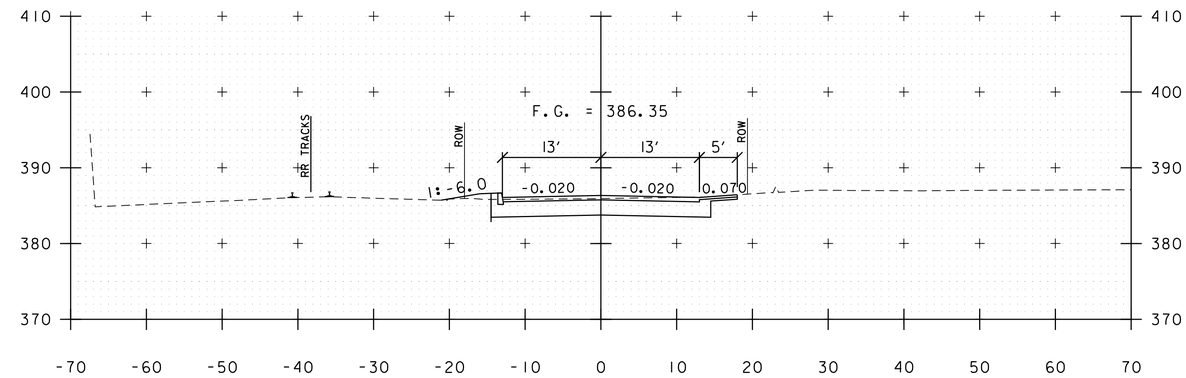

505+50

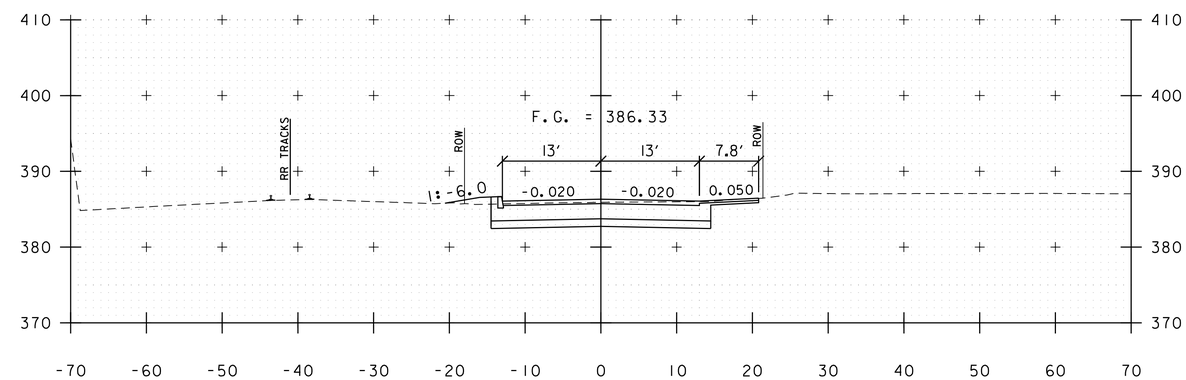

505+25

MARKET STREET

PROJECT NAME: ST. ALBANS	
PROJECT NUMBER: HPP 8000(17)	
FILE NAME: 57414_XS_Market.dgn	PLOT DATE: 3/4/2016
PROJECT LEADER: J.D. SALADINO	DRAWN BY: G.A. GOMEZ
DESIGNED BY: G.A. GOMEZ	CHECKED BY: M.J. SERVETAS
CROSS SECTIONS	SHEET 178 OF 230

VHB 57414.00

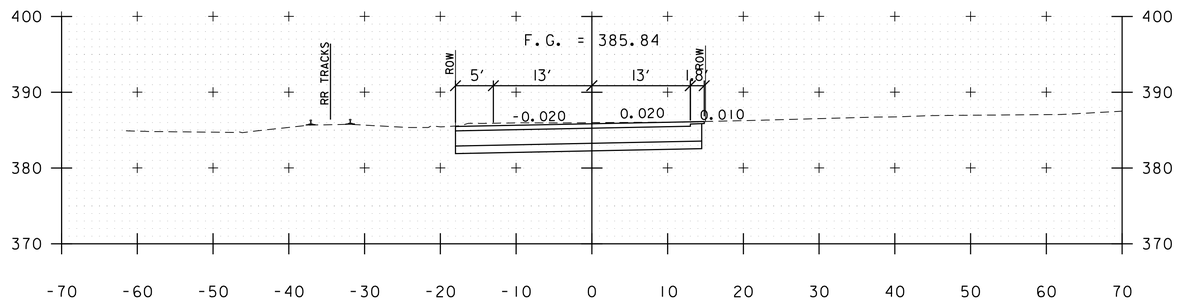

506+50

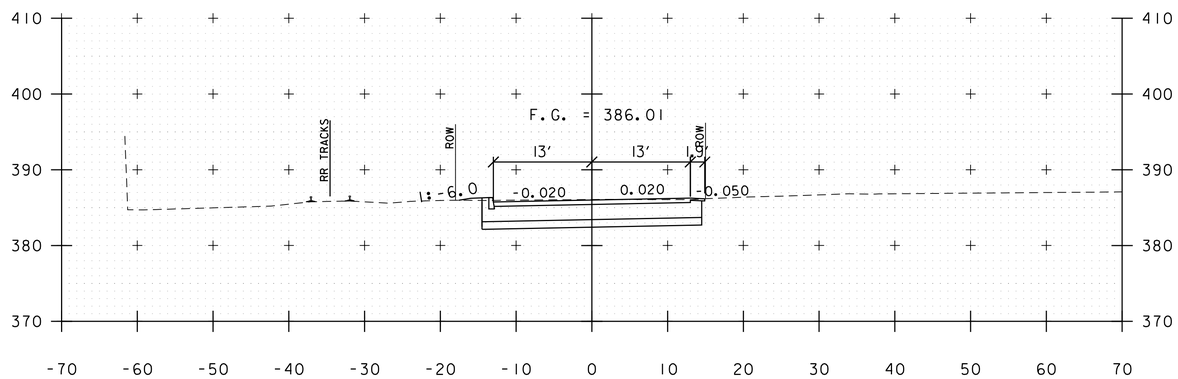

506+25

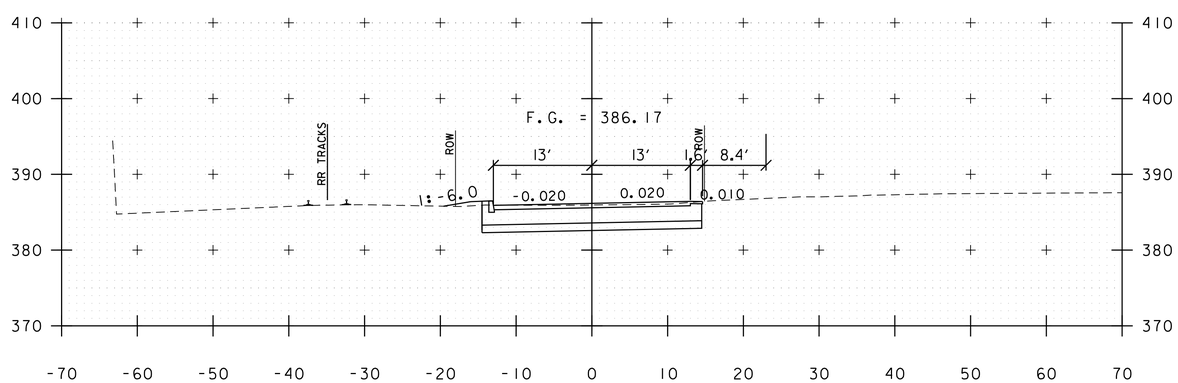

506+00

STATION 507+04
END CONSTRUCTION
MATCH TO LAKE STREET (VT 36)

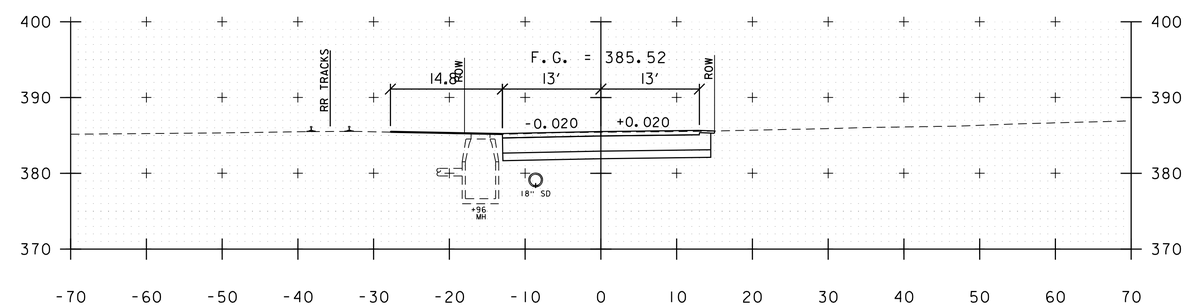

507+00

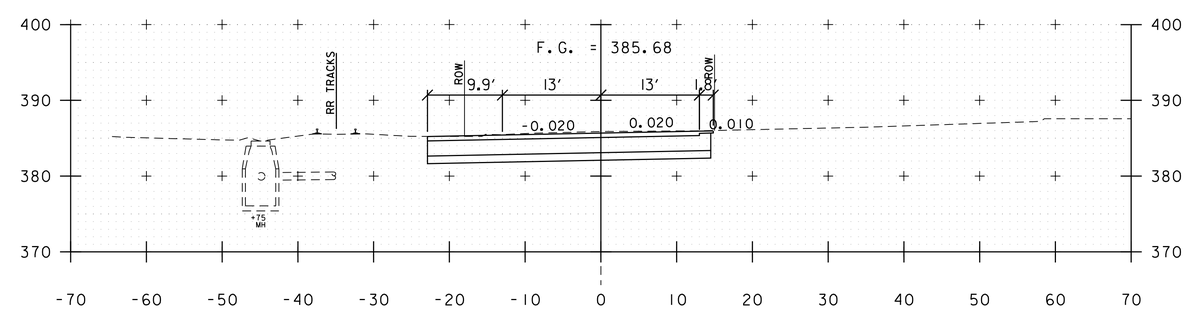

506+75

MARKET STREET

PROJECT NAME: ST. ALBANS	
PROJECT NUMBER: HPP 8000(17)	
FILE NAME: 57414_XS_Market.dgn	PLOT DATE: 3/4/2016
PROJECT LEADER: J.D. SALADINO	DRAWN BY: G.A. GOMEZ
DESIGNED BY: G.A. GOMEZ	CHECKED BY: M.J. SERVETAS
CROSS SECTIONS	SHEET 179 OF 230

VHB 57414.00

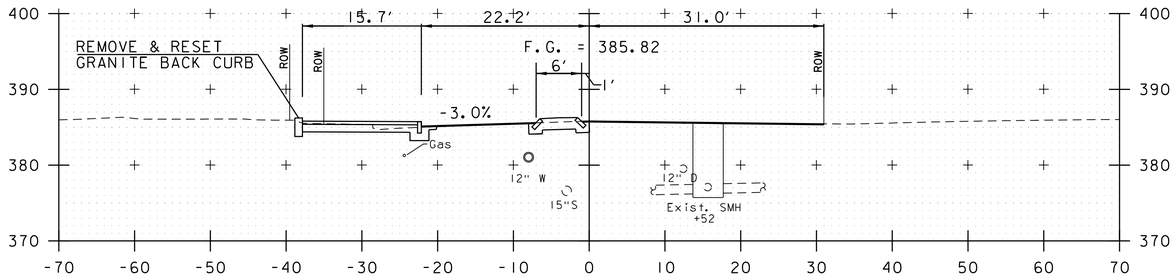

38+50

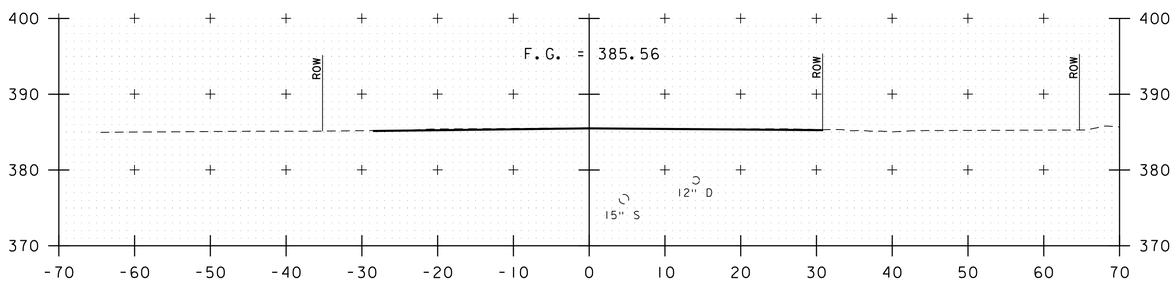

STATION 38+25
BEGIN PROJECT

38+25

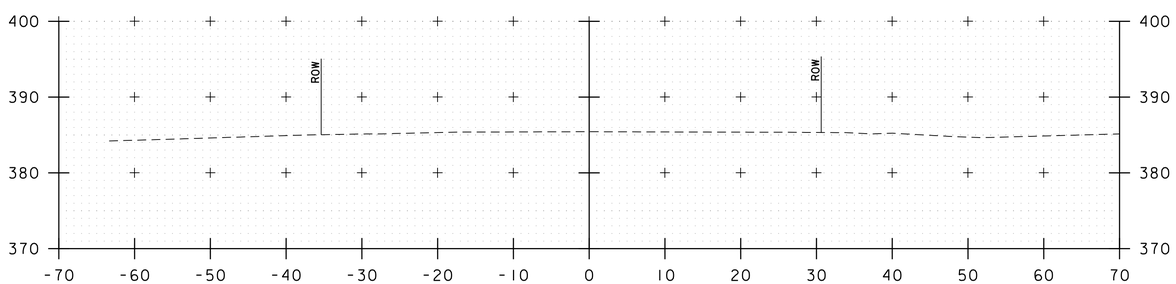

38+00

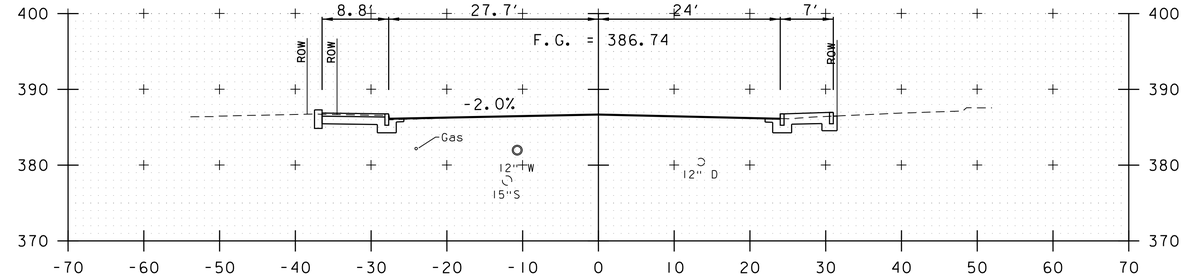

39+25

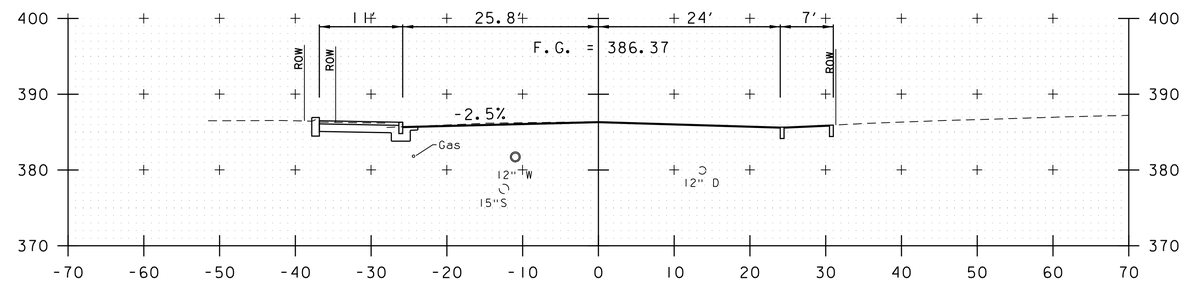

39+00

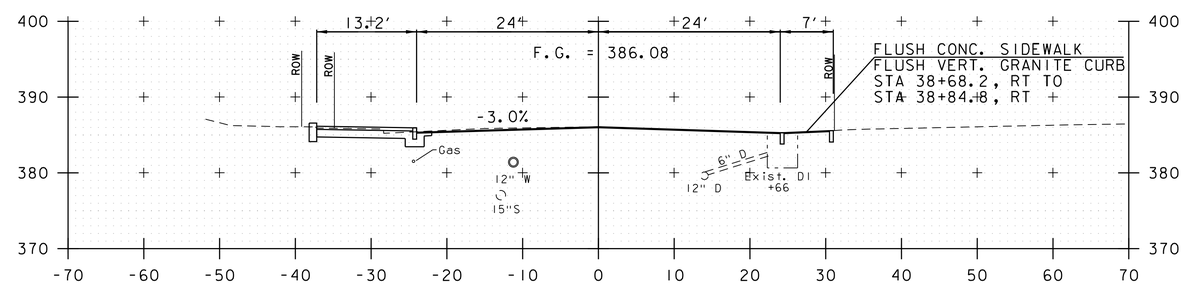

38+75

LAKE STREET (VT 36)

PROJECT NAME: ST. ALBANS	
PROJECT NUMBER: HPP 8000(17)	
FILE NAME: 57414_XS_Lake_Interim.dgn	PLOT DATE: 3/4/2016
PROJECT LEADER: M.A. COLGAN	DRAWN BY: D.M. PECK
DESIGNED BY: D.M. PECK	CHECKED BY: M.J. SERVETAS
CROSS SECTIONS	SHEET 180 OF 230

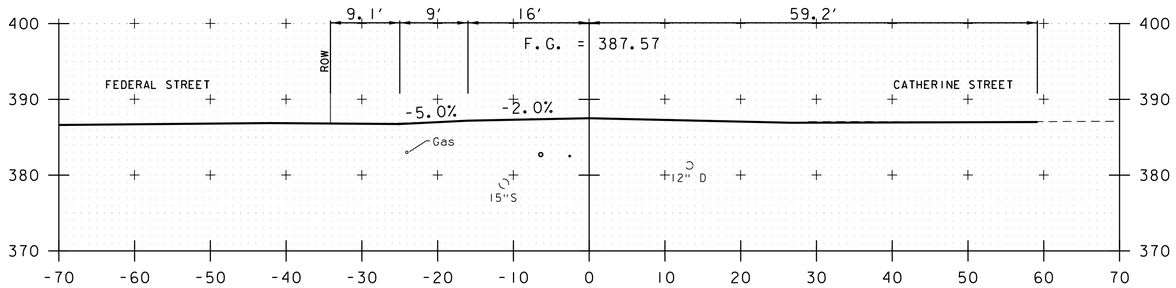

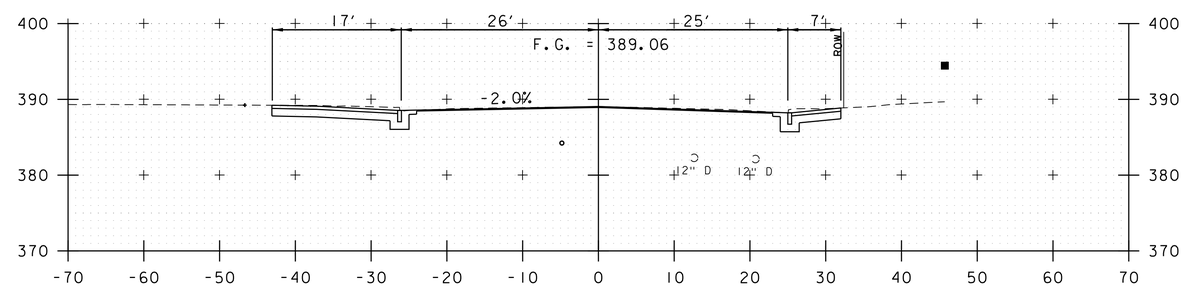

39+75

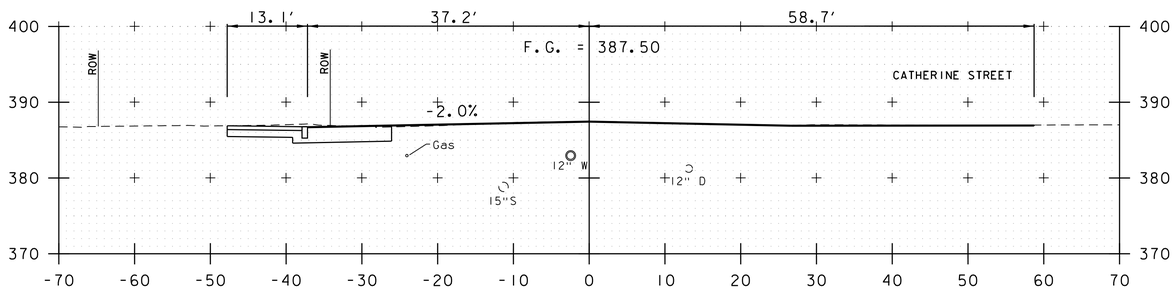

40+50

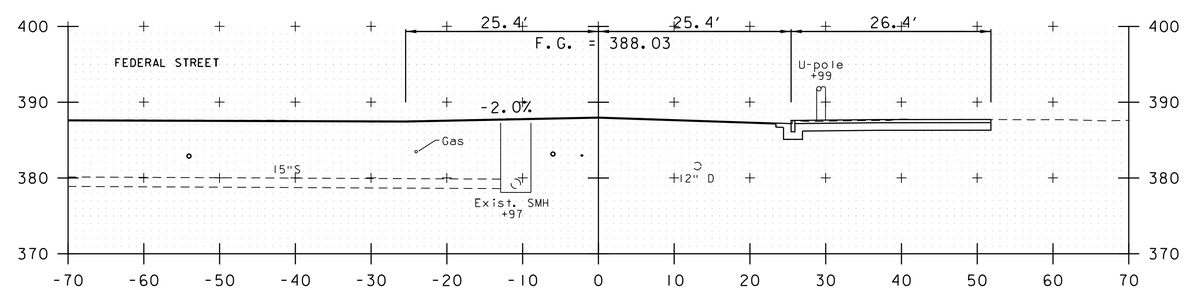

39+62

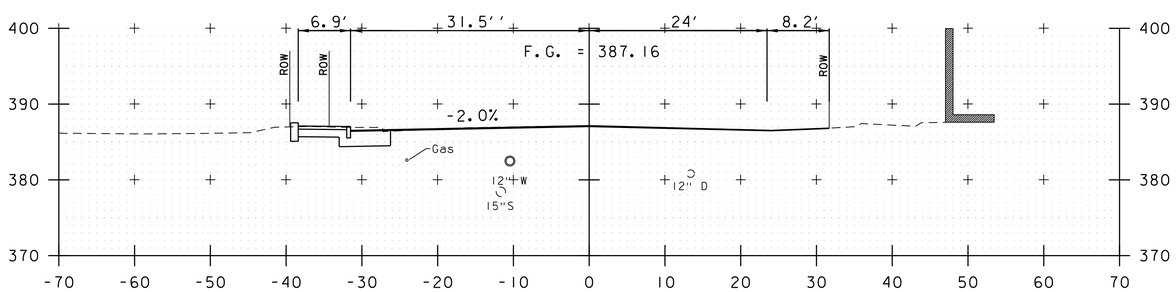

40+00

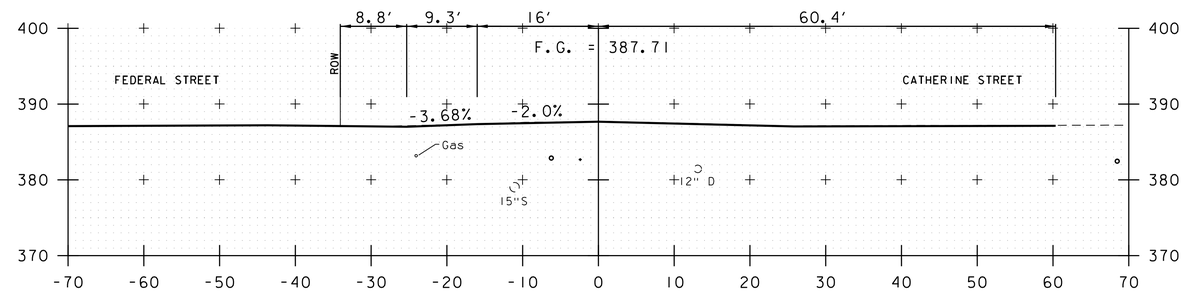

39+50

39+86

LAKE STREET (VT 36)

PROJECT NAME: ST. ALBANS	
PROJECT NUMBER: HPP 8000(17)	
FILE NAME: 57414_XS_Lake_Interim.dgn	PLOT DATE: 3/4/2016
PROJECT LEADER: M.A. COLGAN	DRAWN BY: D.M. PECK
DESIGNED BY: D.M. PECK	CHECKED BY: M.J. SERVETAS
CROSS SECTIONS	SHEET 181 OF 230

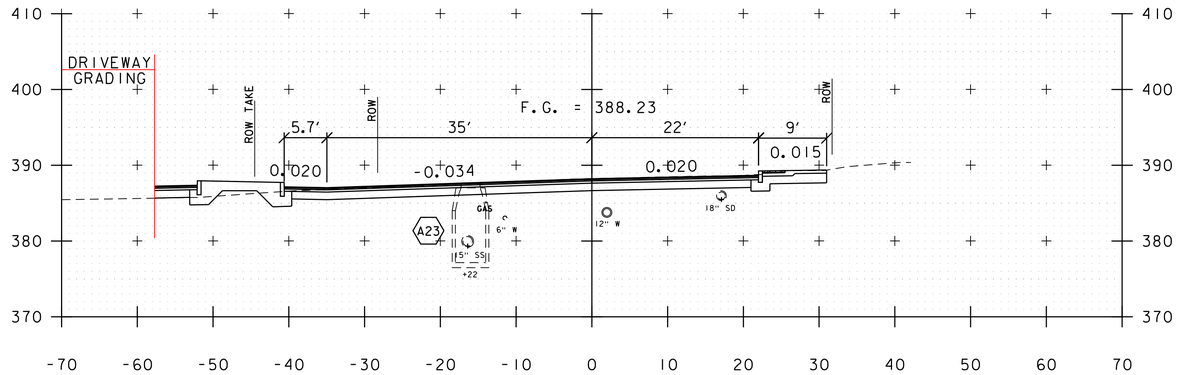

602+00

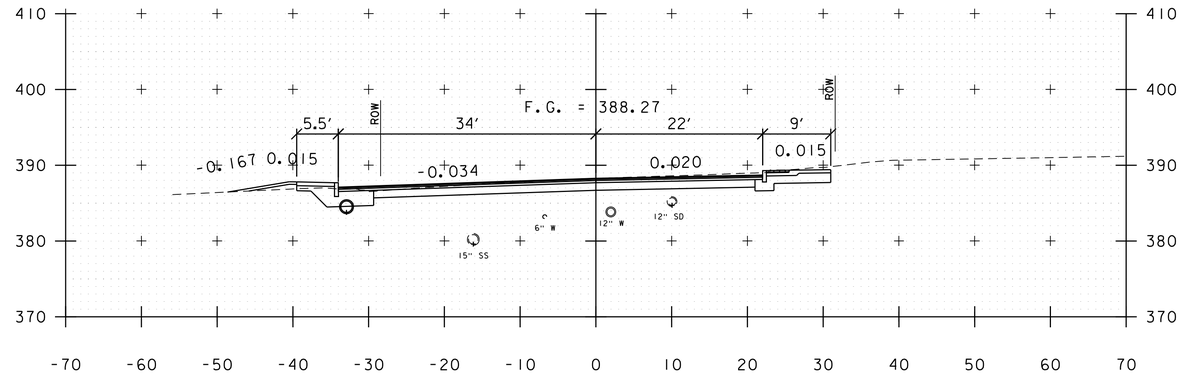

602+75

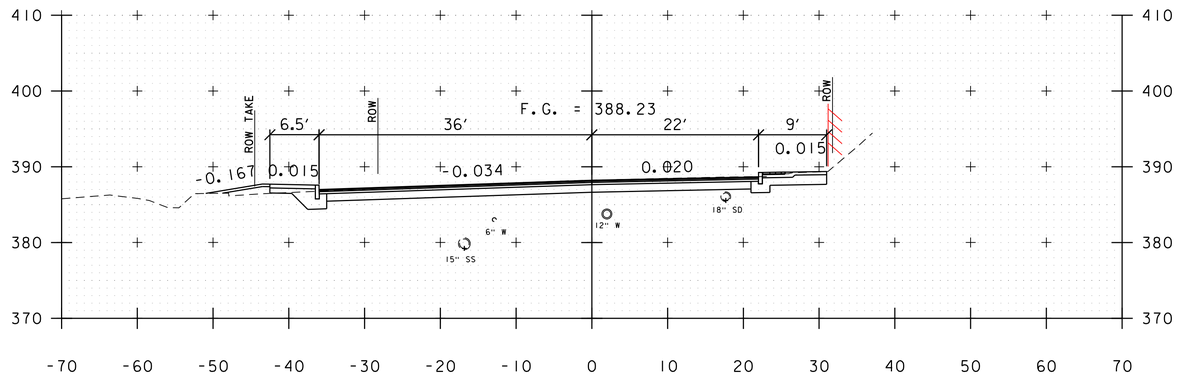

601+75

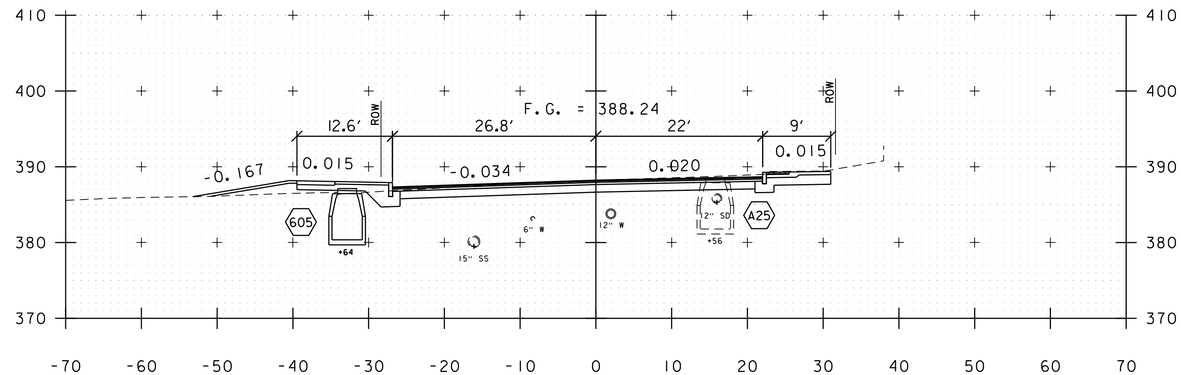

602+50

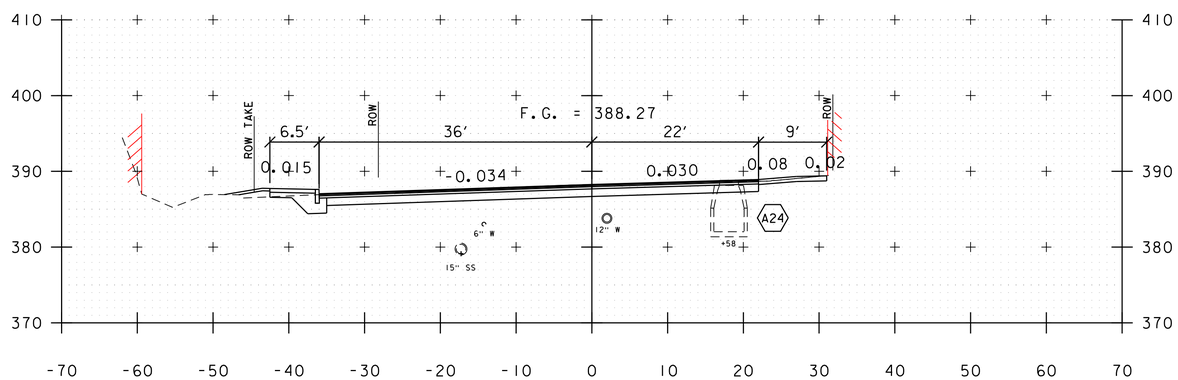

601+50

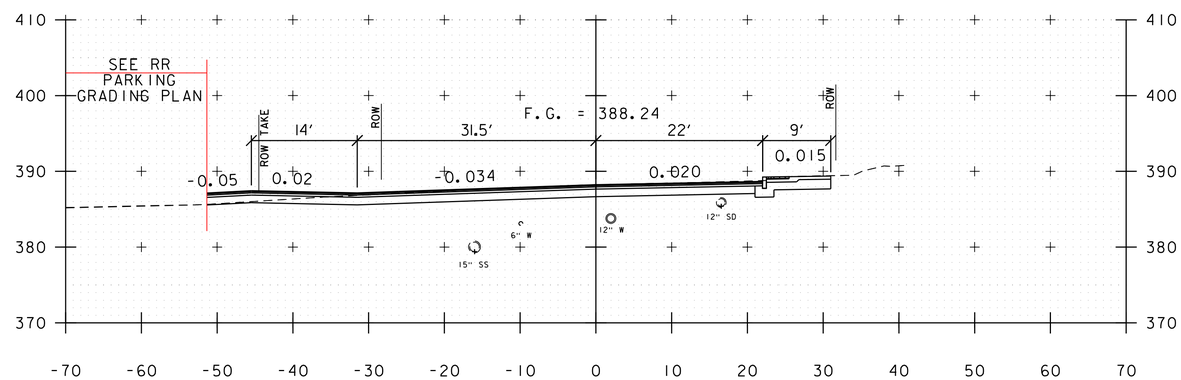

602+25

FEDERAL STREET

PROJECT NAME: ST. ALBANS	
PROJECT NUMBER: HPP 8000(17)	
FILE NAME: 57414_XS_FederalStreet.dgn	PLOT DATE: 3/4/2016
PROJECT LEADER: J.D. SALADINO	DRAWN BY: G.A. GOMEZ
DESIGNED BY: G.A. GOMEZ	CHECKED BY: M.J. SERVETAS
CROSS SECTIONS	SHEET 182 OF 230

VHB 57414.00

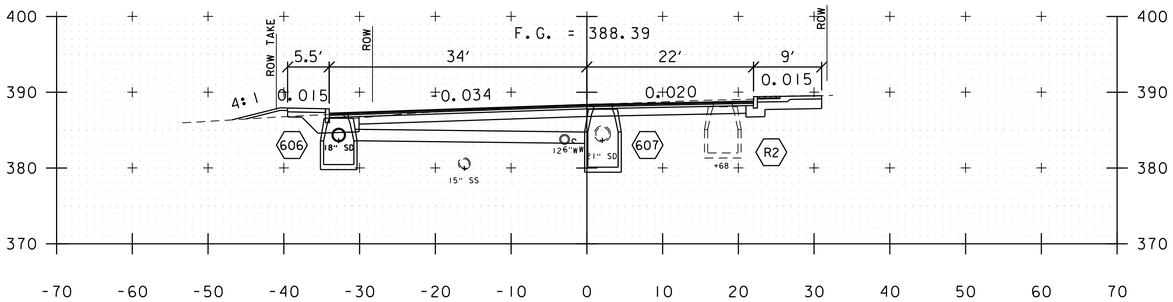

603+50

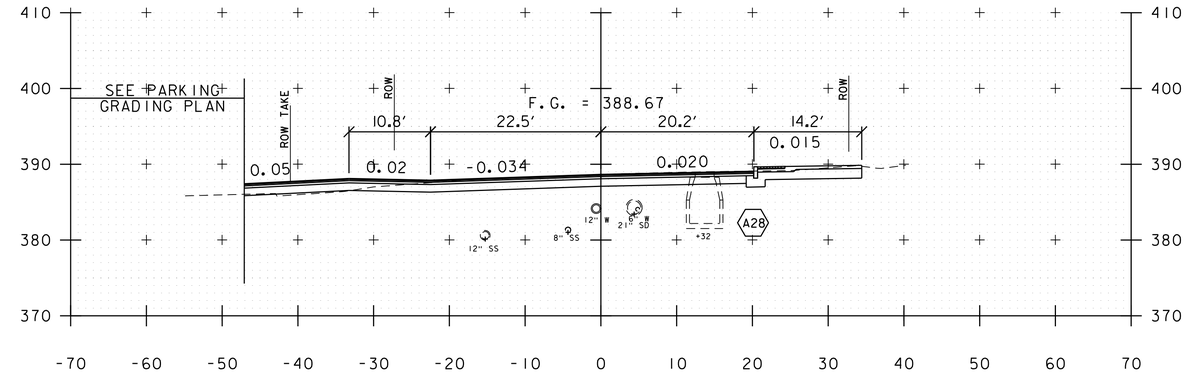

604+25

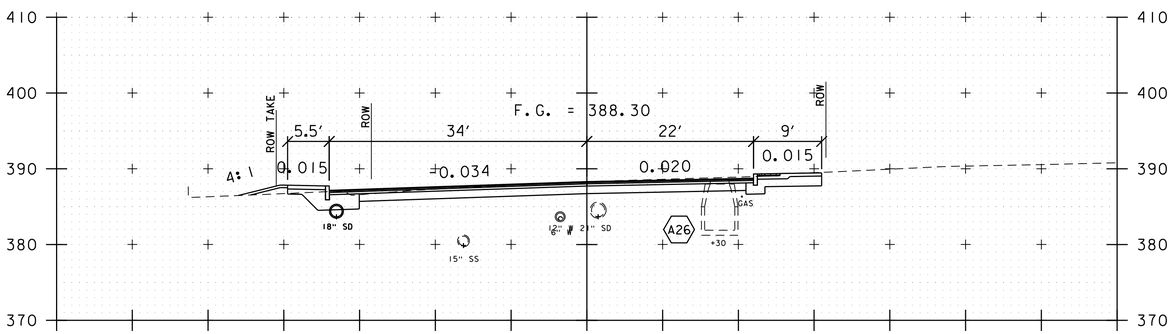

603+25

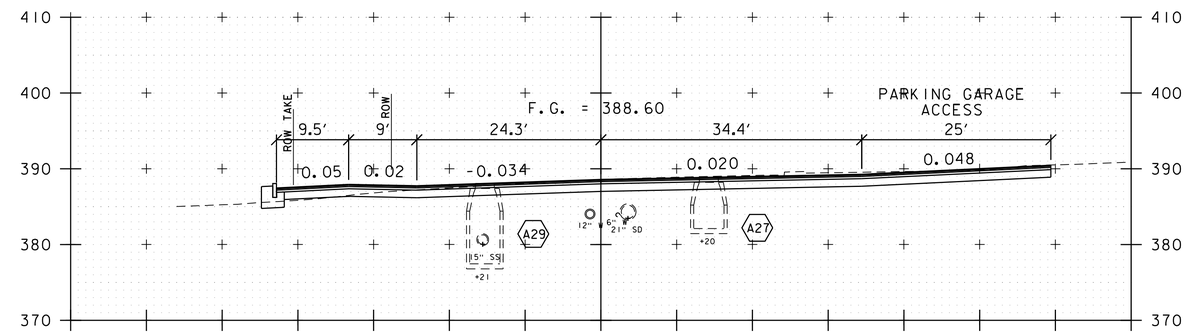

604+00

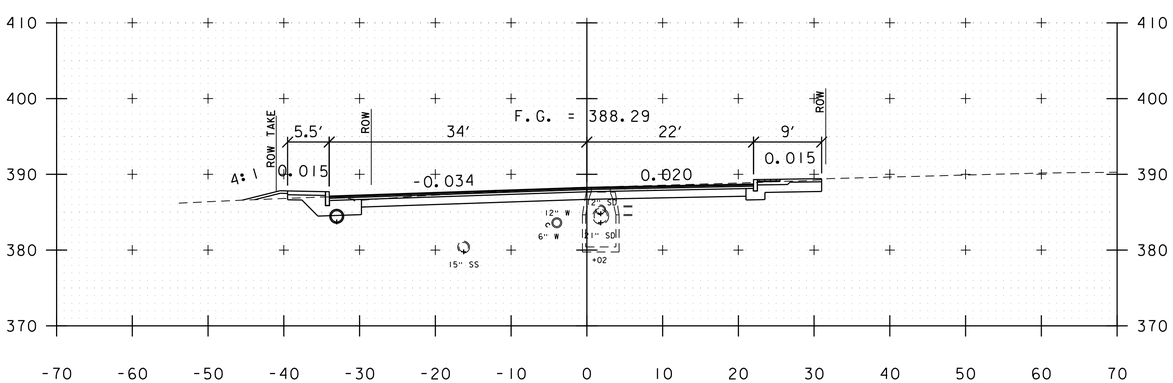

603+00

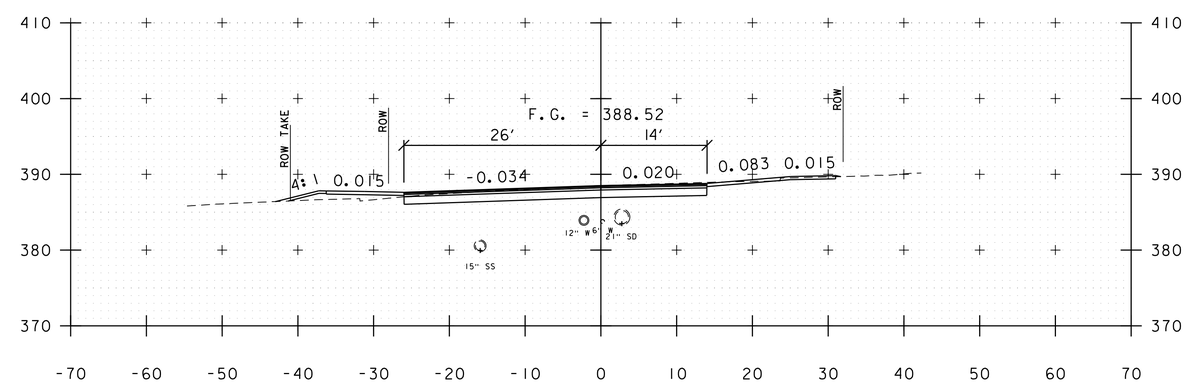

603+75

FEDERAL STREET

PROJECT NAME: ST. ALBANS	
PROJECT NUMBER: HPP 8000(17)	
FILE NAME: 57414_XS_FederalStreet.dgn	PLOT DATE: 3/4/2016
PROJECT LEADER: J.D. SALADINO	DRAWN BY: G.A. GOMEZ
DESIGNED BY: G.A. GOMEZ	CHECKED BY: M.J. SERVETAS
CROSS SECTIONS	SHEET 183 OF 230

VHB 57414.00

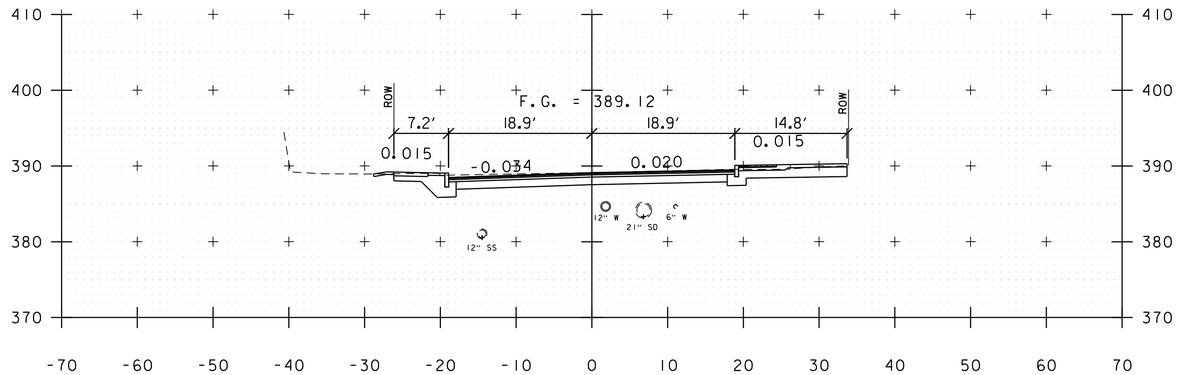

605+00

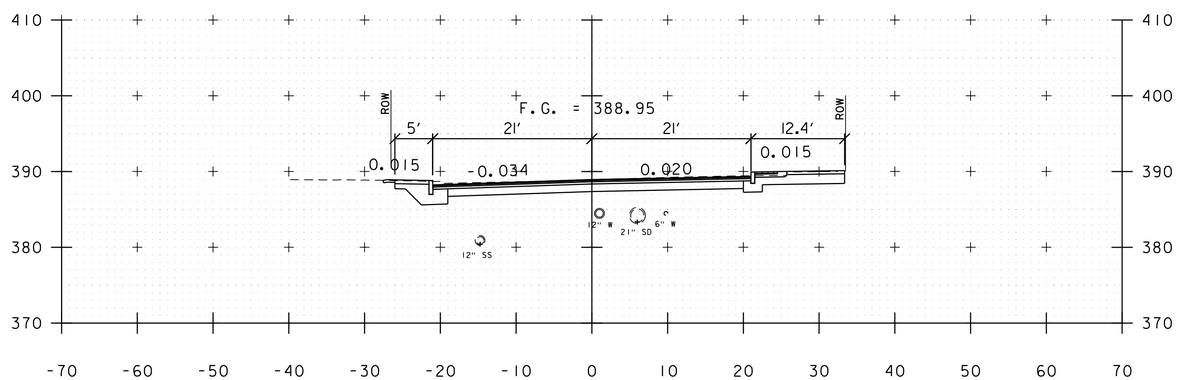

604+75

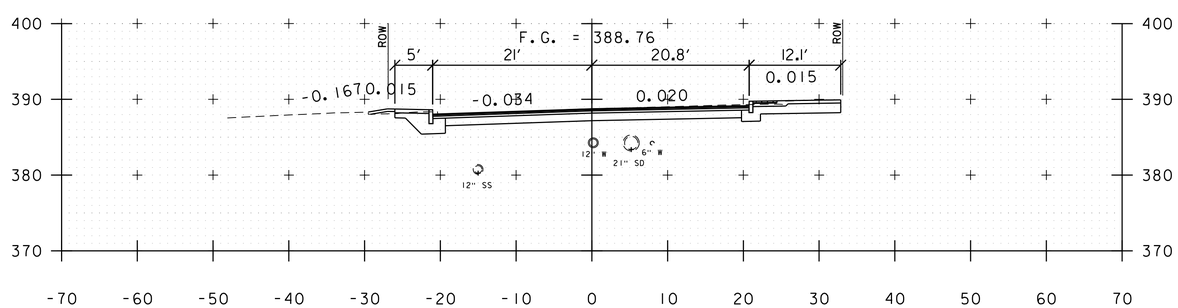

604+50

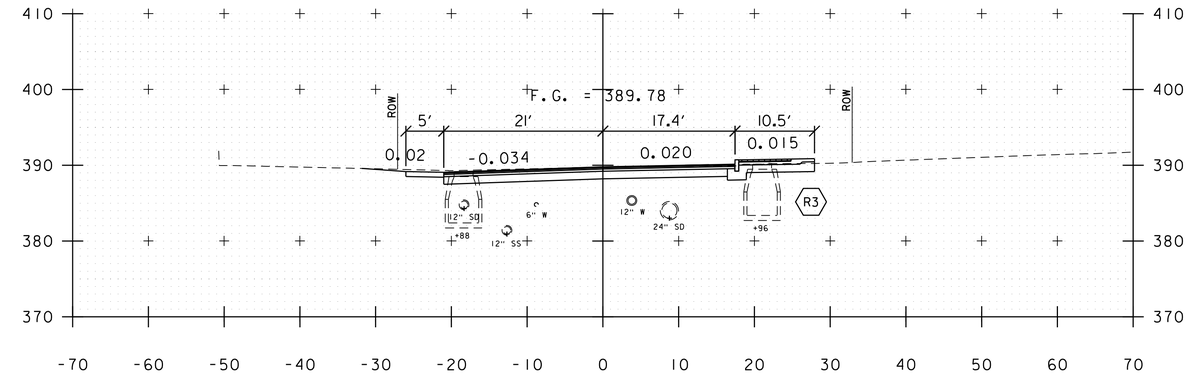

605+75

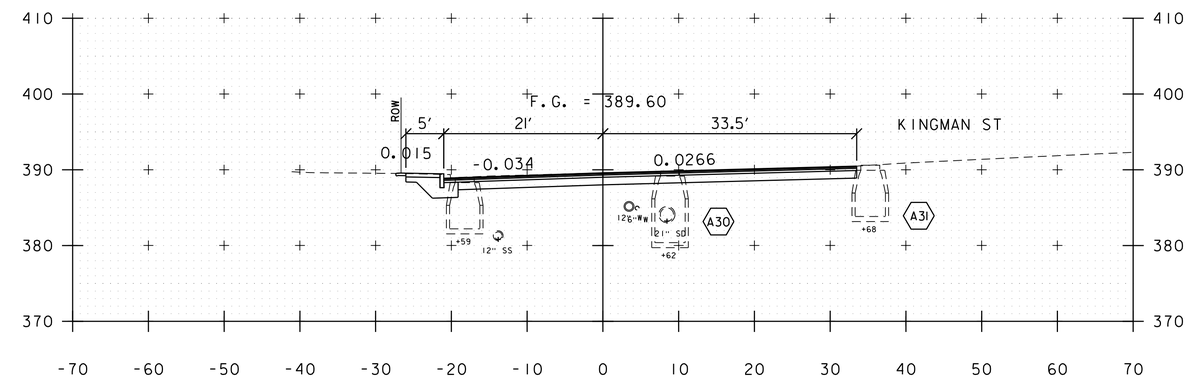

605+50

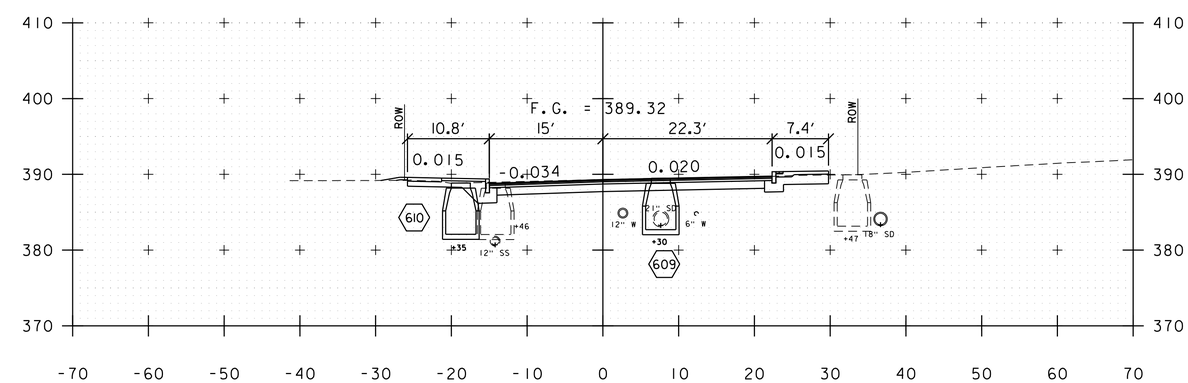

605+25

FEDERAL STREET

PROJECT NAME: ST. ALBANS	
PROJECT NUMBER: HPP 8000(17)	
FILE NAME: 57414_XS_FederalStreet.dgn	PLOT DATE: 3/4/2016
PROJECT LEADER: J.D. SALADINO	DRAWN BY: G.A. GOMEZ
DESIGNED BY: G.A. GOMEZ	CHECKED BY: M.J. SERVETAS
CROSS SECTIONS	SHEET 184 OF 230

VHB 57414.00

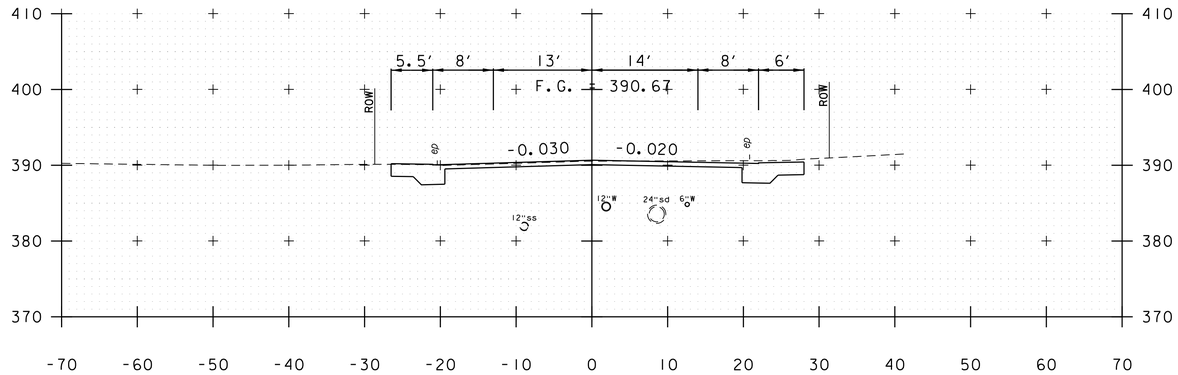

606+68

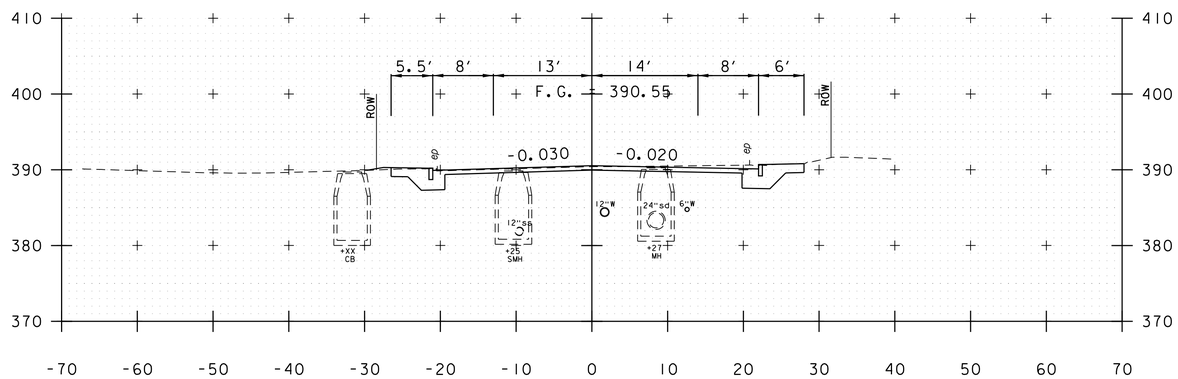

606+50

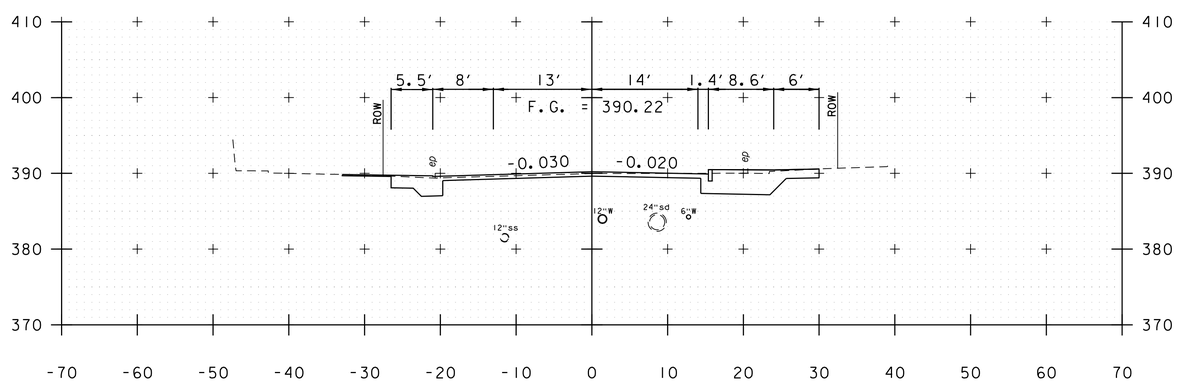

606+00

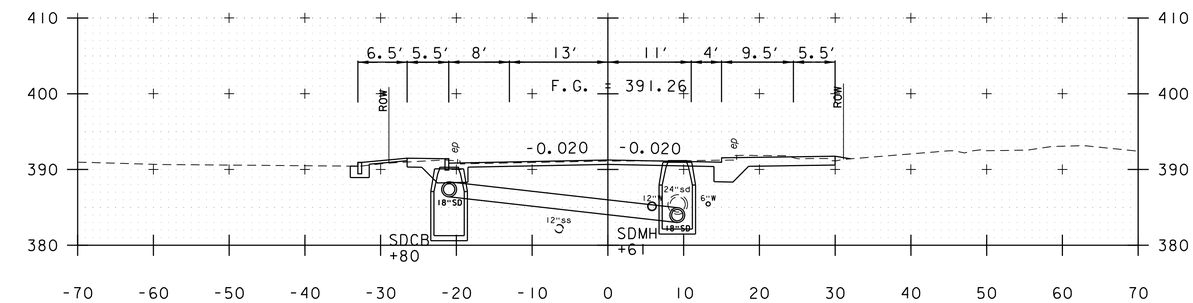

607+50

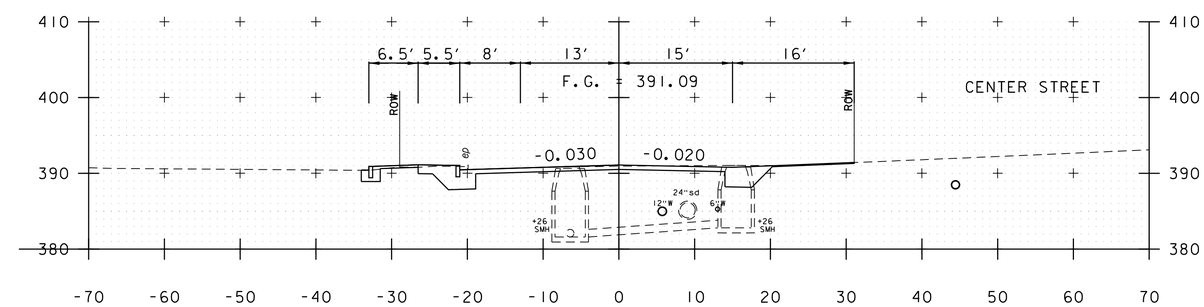

607+27

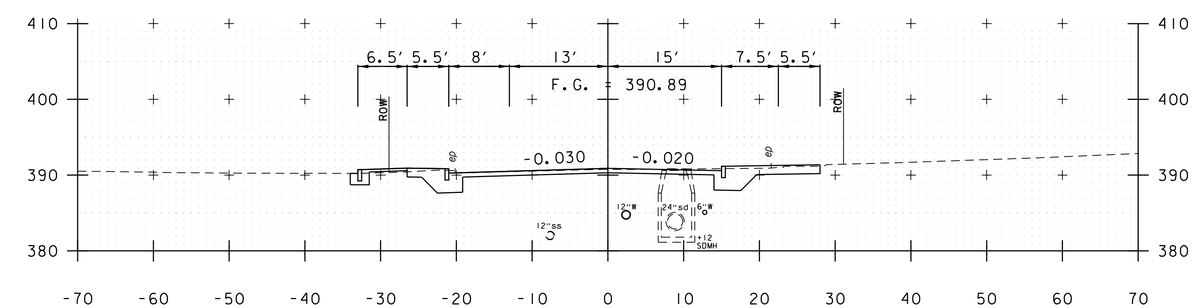

607+00

FEDERAL STREET

PROJECT NAME: ST. ALBANS	
PROJECT NUMBER: HPP 8000(17)	
FILE NAME: 57414_XS_FederalStreet.dgn	PLOT DATE: 3/4/2016
PROJECT LEADER: J.D. SALADINO	DRAWN BY: M.C. SCOTT
DESIGNED BY: M.C. SCOTT	CHECKED BY: M.J. SERVETAS
CROSS SECTIONS	SHEET 185 OF 230

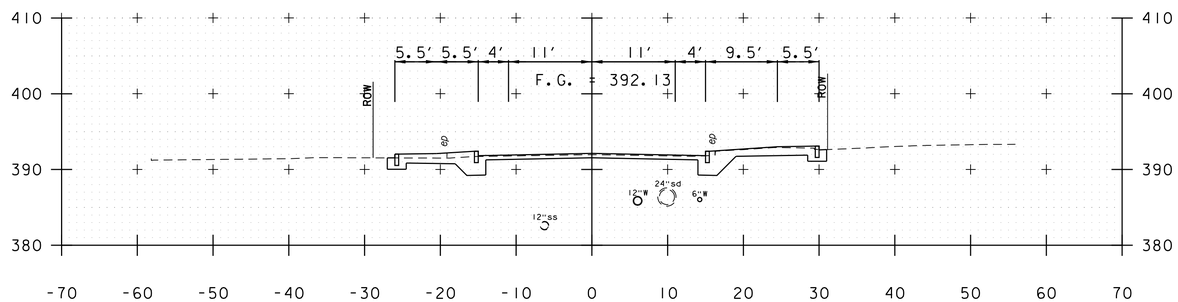

608+50

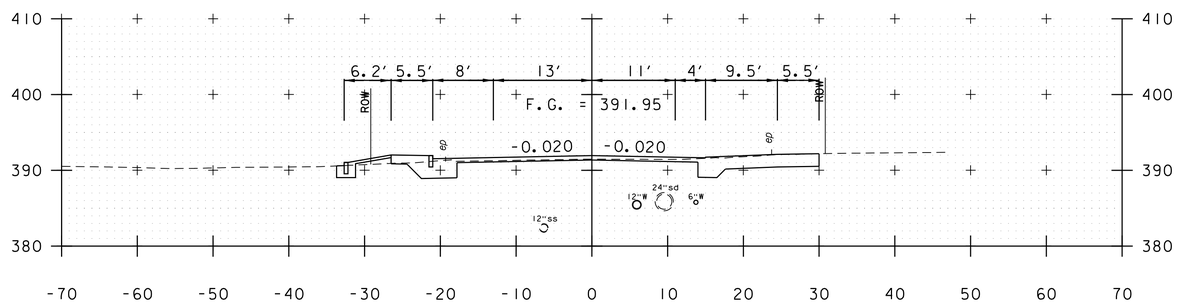

608+00

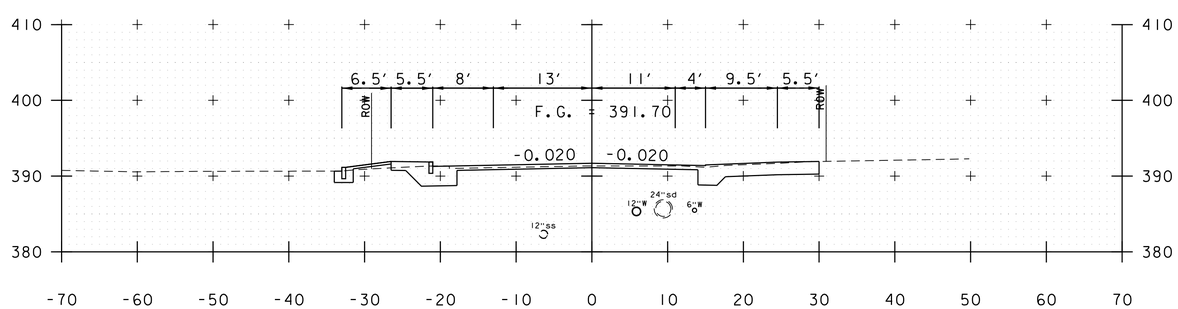

607+82

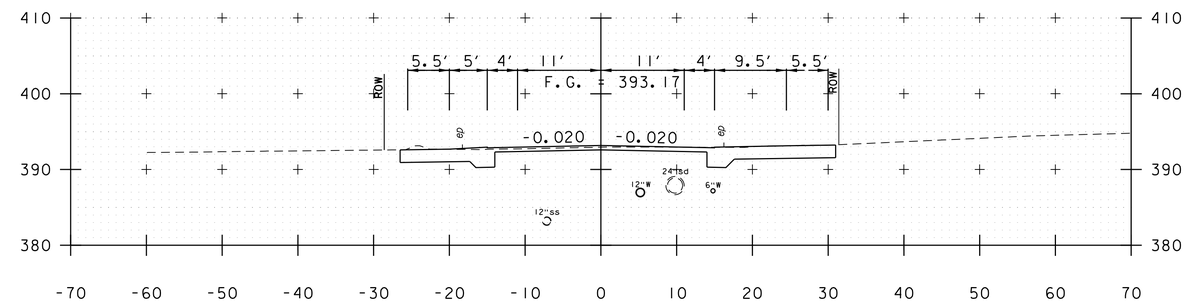

610+00

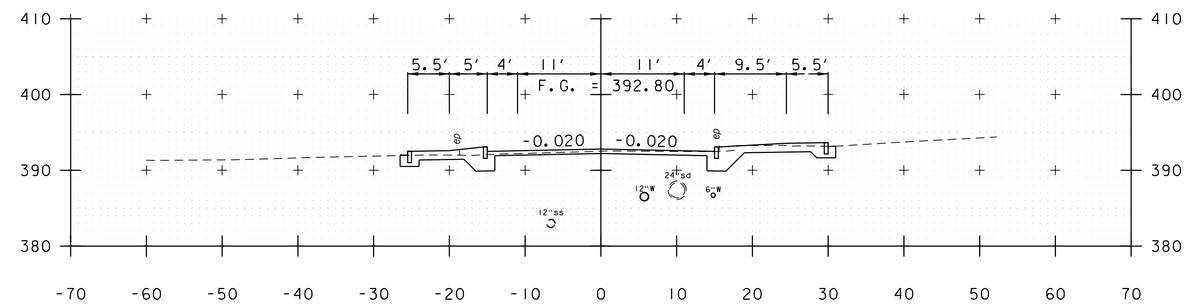

609+50

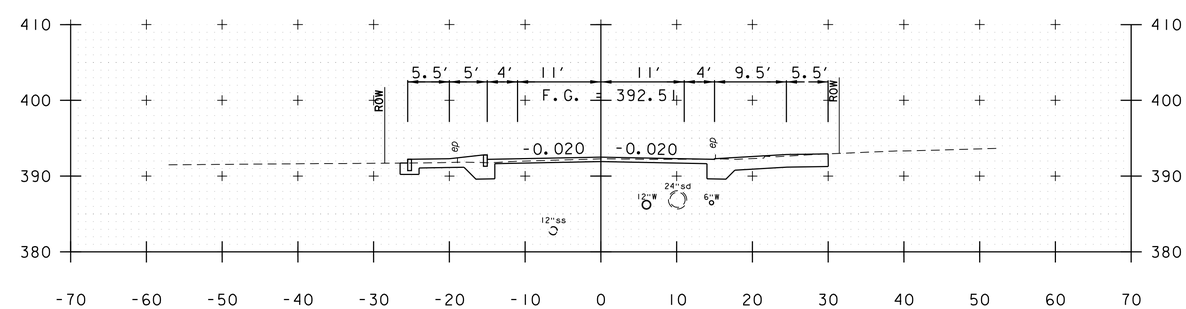

609+00

FEDERAL STREET

PROJECT NAME: ST. ALBANS	
PROJECT NUMBER: HPP 8000(17)	
FILE NAME: 57414_XS_FederalStreet.dgn	PLOT DATE: 3/4/2016
PROJECT LEADER: J.D. SALADINO	DRAWN BY: M.C. SCOTT
DESIGNED BY: M.C. SCOTT	CHECKED BY: M.J. SERVETAS
CROSS SECTIONS	SHEET 186 OF 230

VHB 57414.00

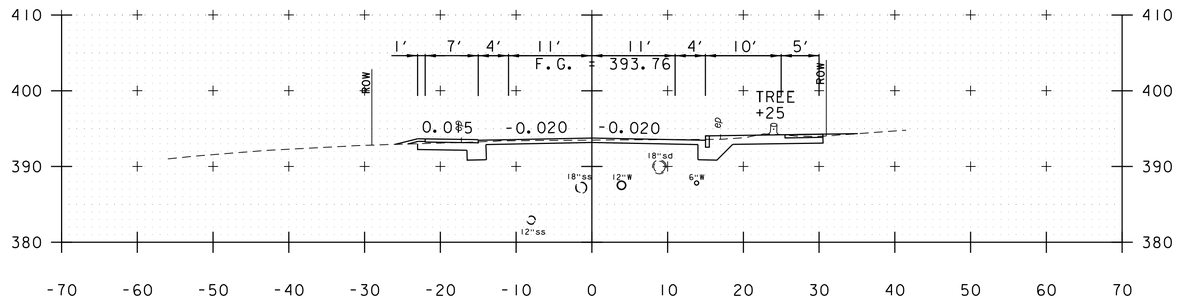

611+00

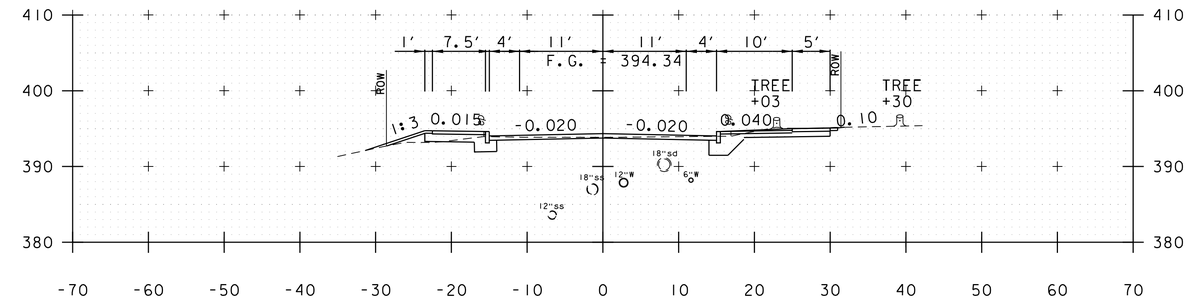

612+00

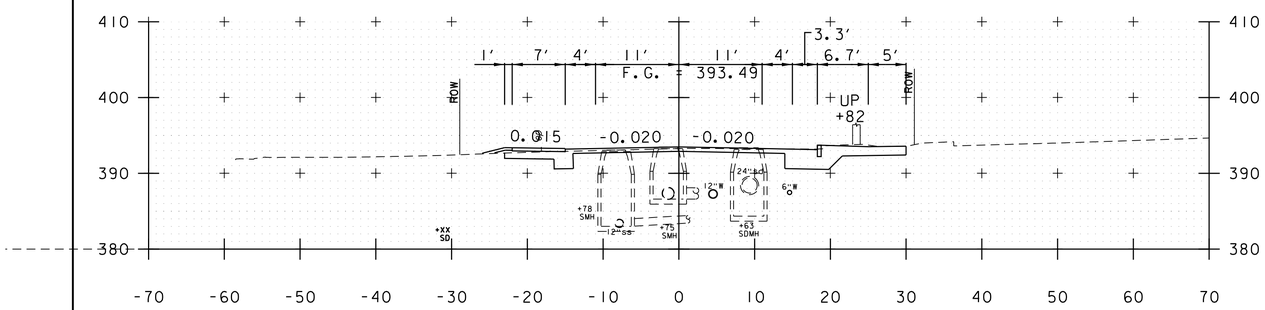

610+50

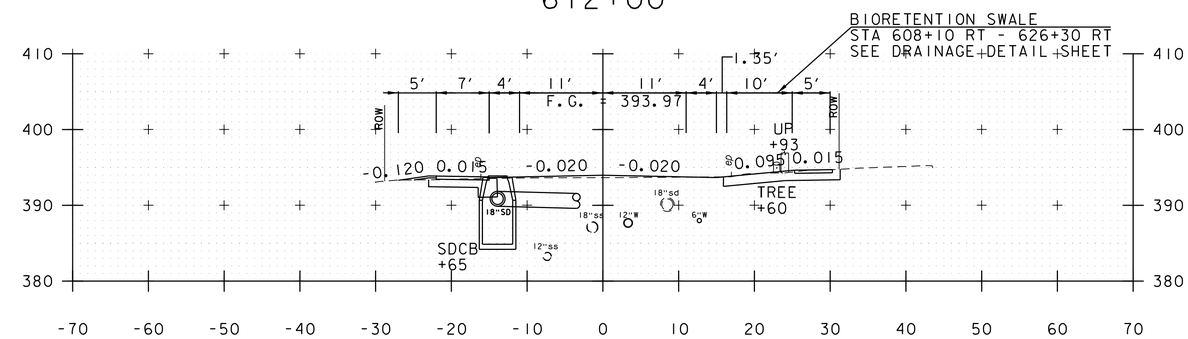

611+50

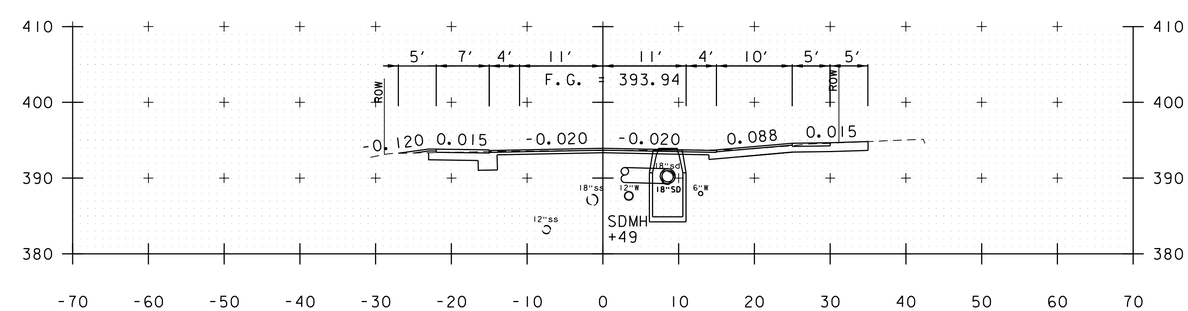

611+42

FEDERAL STREET

PROJECT NAME: ST. ALBANS	
PROJECT NUMBER: HPP 8000(17)	
FILE NAME: 57414_XS_FederalStreet.dgn	PLOT DATE: 3/4/2016
PROJECT LEADER: J.D. SALADINO	DRAWN BY: M.C. SCOTT
DESIGNED BY: M.C. SCOTT	CHECKED BY: M.J. SERVETAS
CROSS SECTIONS	SHEET 187 OF 230

VHB 57414.00

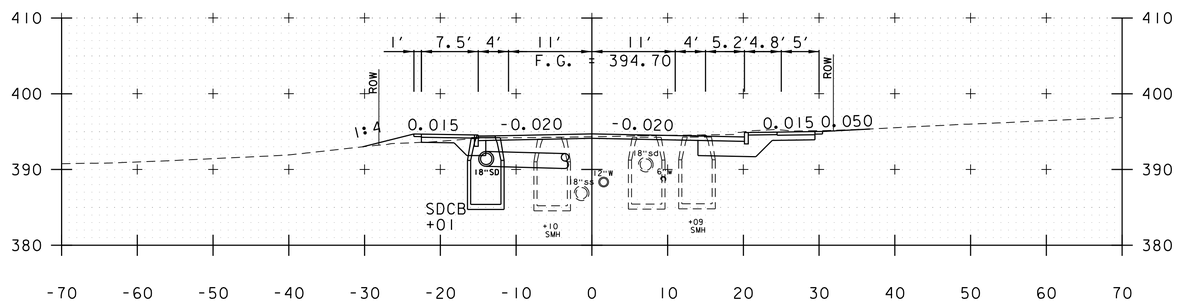

613+00

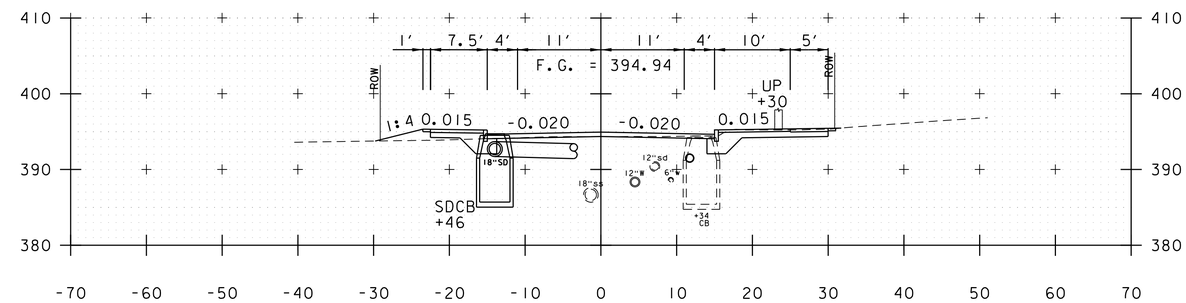

614+00

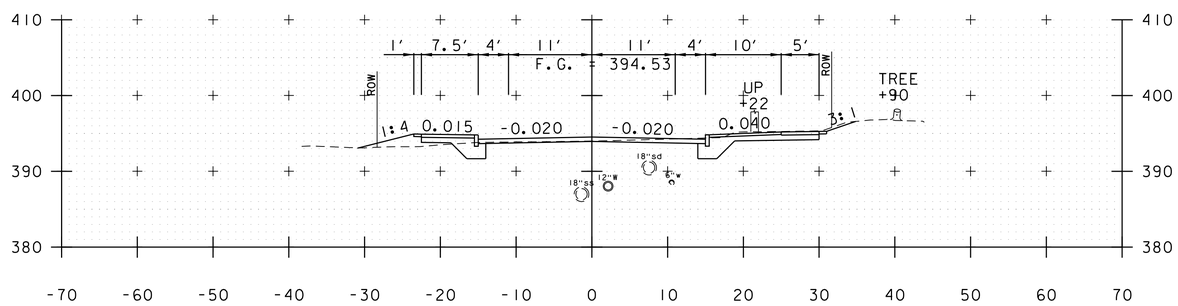

612+50

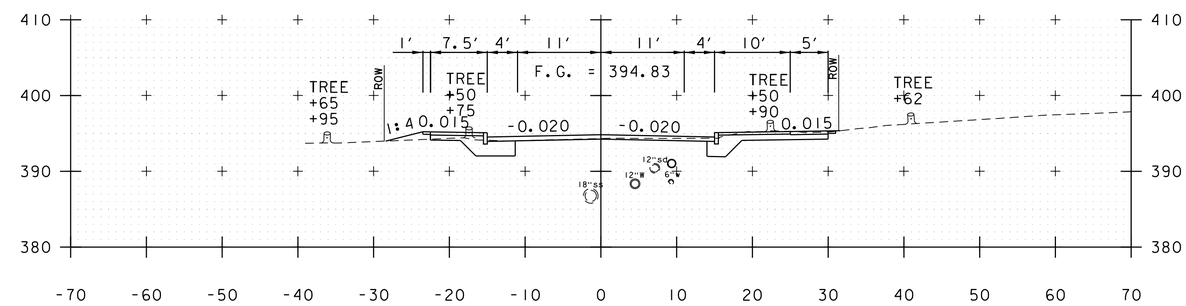

613+50

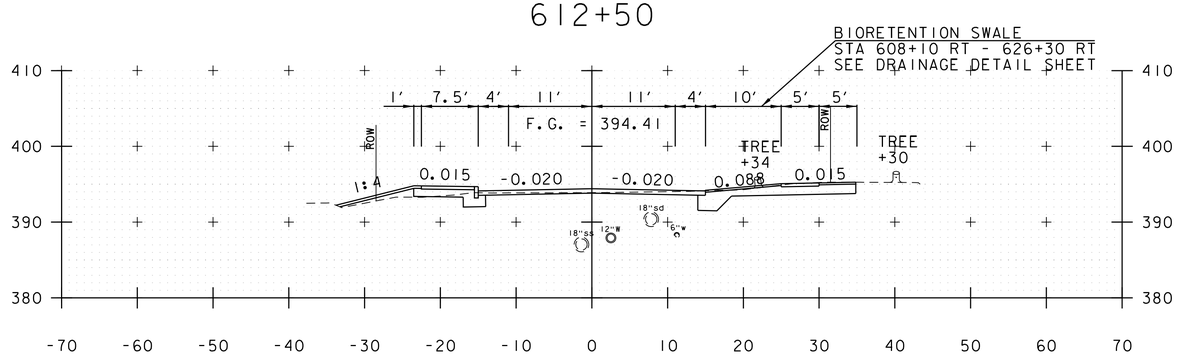

612+19

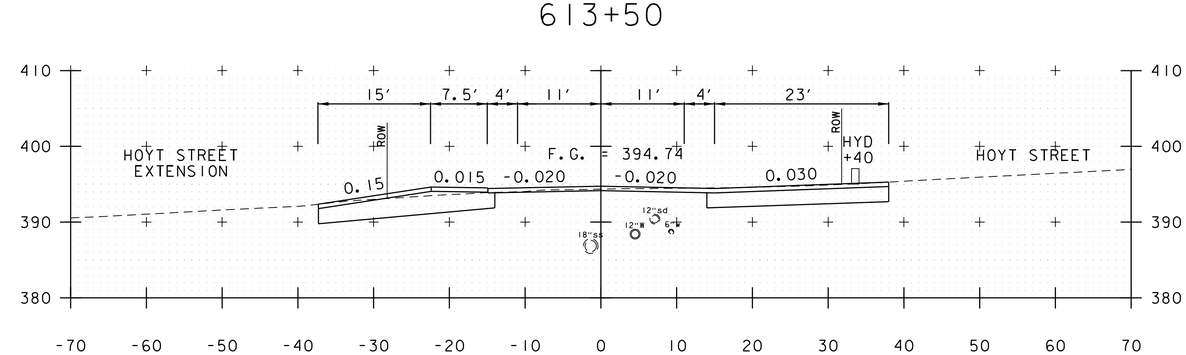

613+14

FEDERAL STREET

PROJECT NAME: ST. ALBANS	
PROJECT NUMBER: HPP 8000(17)	
FILE NAME: 57414_XS_FederalStreet.dgn	PLOT DATE: 3/4/2016
PROJECT LEADER: J.D. SALADINO	DRAWN BY: M.C. SCOTT
DESIGNED BY: M.C. SCOTT	CHECKED BY: M.J. SERVETAS
CROSS SECTIONS	SHEET 188 OF 230

VHB 57414.00

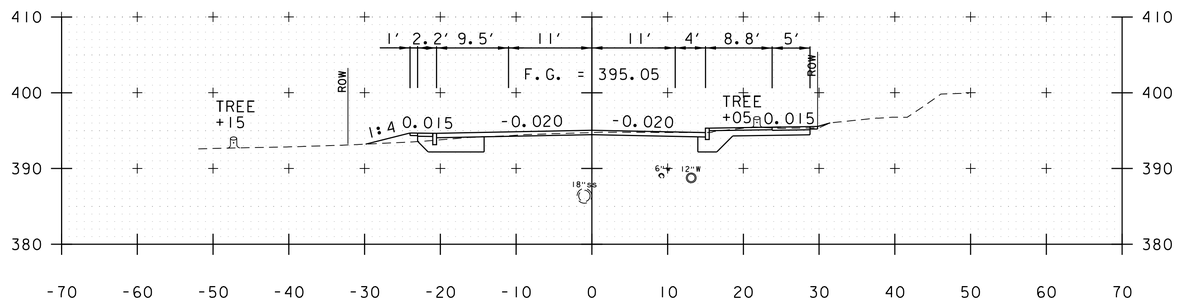

615+00

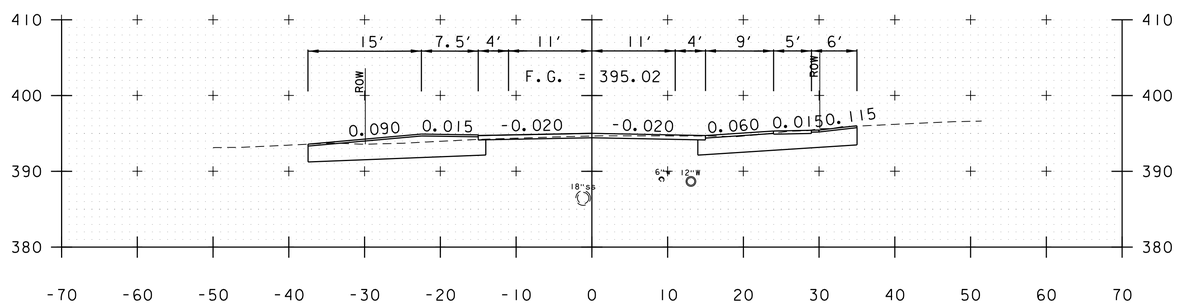

614+73

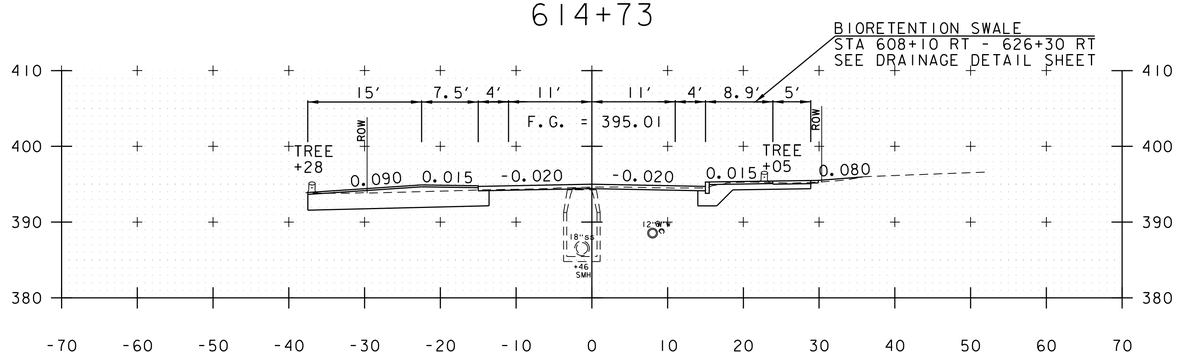

614+50

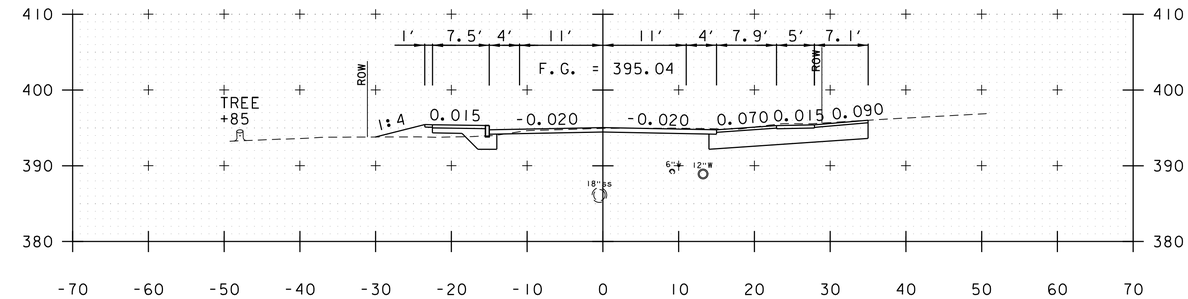

615+84

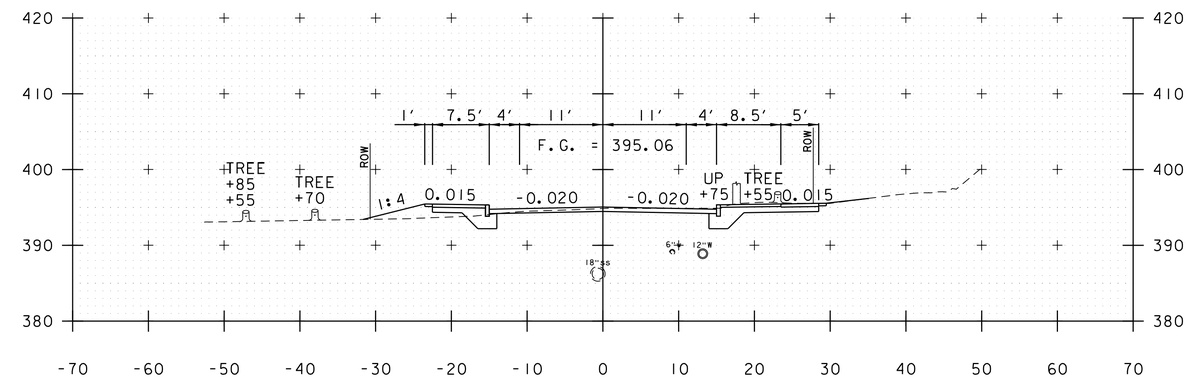

615+50

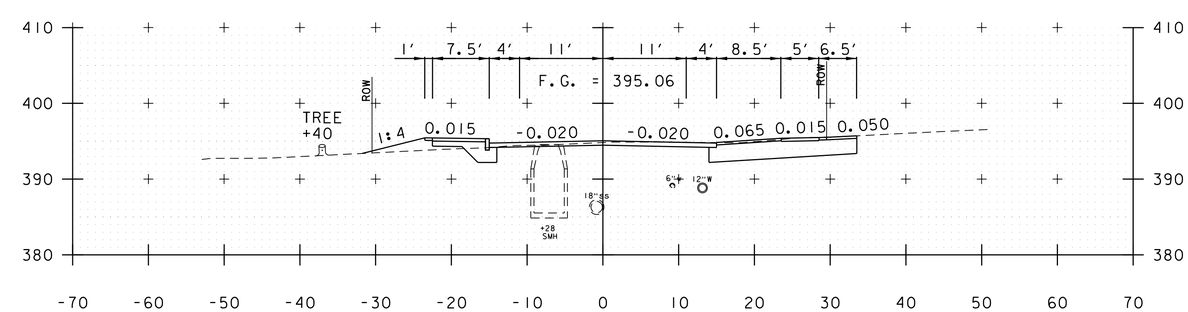

615+26

FEDERAL STREET

PROJECT NAME: ST. ALBANS	
PROJECT NUMBER: HPP 8000(17)	
FILE NAME: 57414_XS_FederalStreet.dgn	PLOT DATE: 3/4/2016
PROJECT LEADER: J.D. SALADINO	DRAWN BY: M.C. SCOTT
DESIGNED BY: M.C. SCOTT	CHECKED BY: M.J. SERVETAS
CROSS SECTIONS	SHEET 189 OF 230

VHB 57414.00

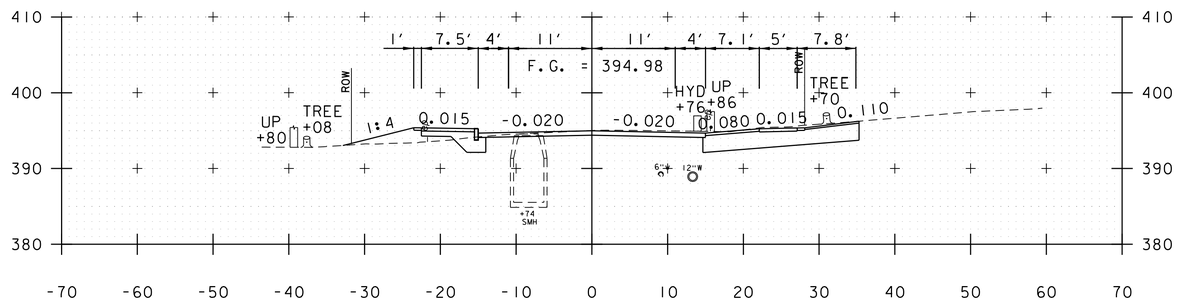

616+50

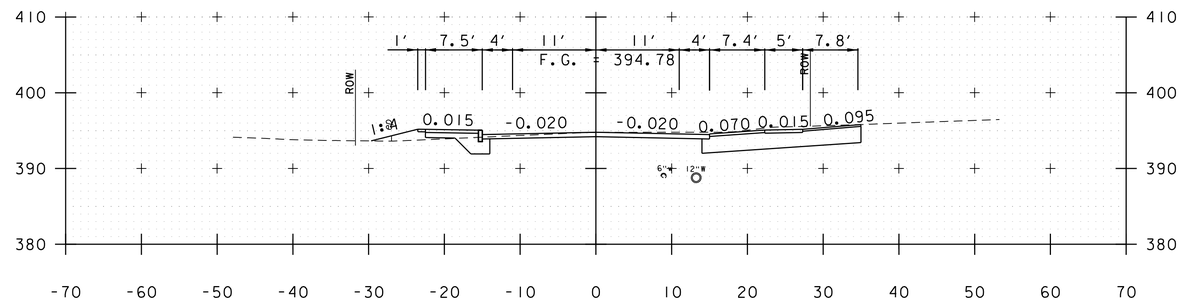

617+50

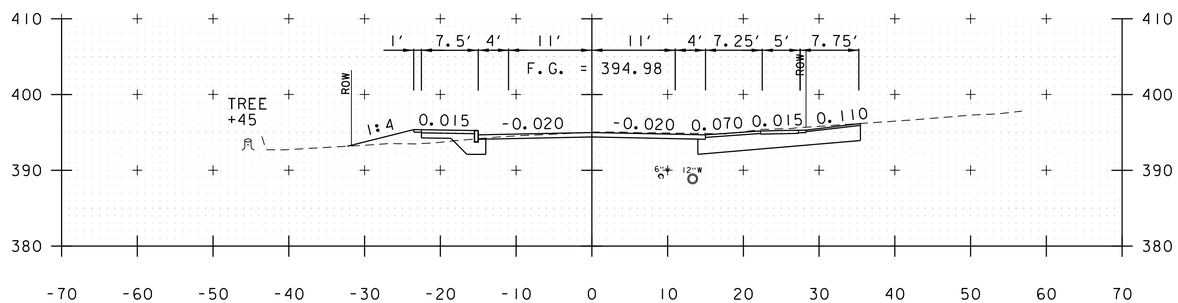

616+45

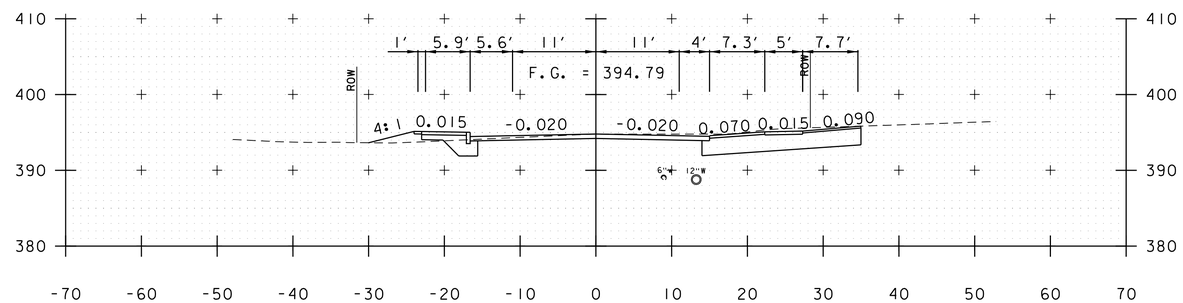

617+46

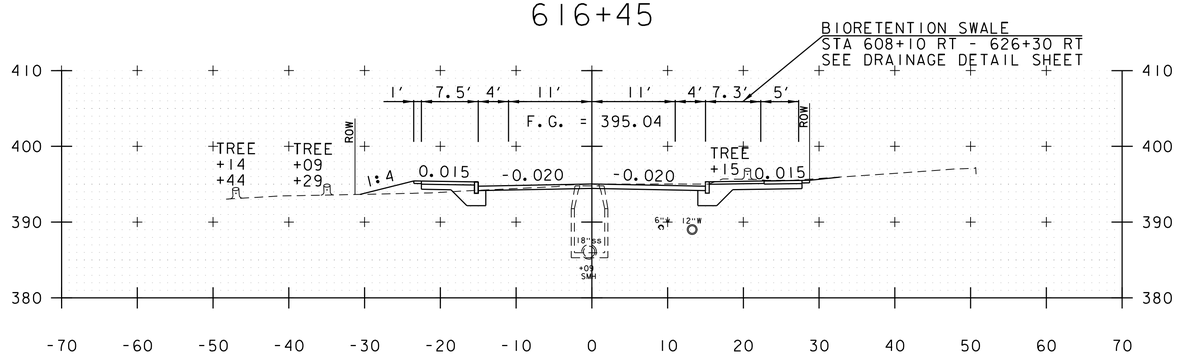

616+00

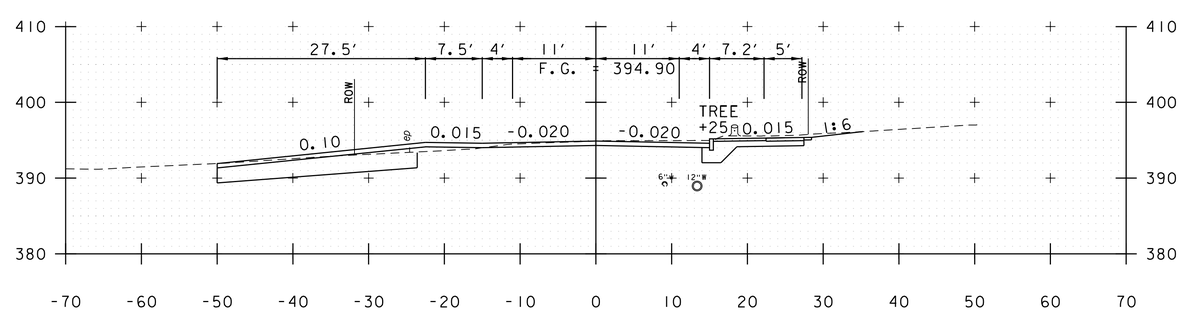

617+00

FEDERAL STREET

PROJECT NAME: ST. ALBANS	
PROJECT NUMBER: HPP 8000(17)	
FILE NAME: 57414_XS_FederalStreet.dgn	PLOT DATE: 3/4/2016
PROJECT LEADER: J.D. SALADINO	DRAWN BY: M.C. SCOTT
DESIGNED BY: M.C. SCOTT	CHECKED BY: M.J. SERVETAS
CROSS SECTIONS	SHEET 190 OF 230

VHB 57414.00

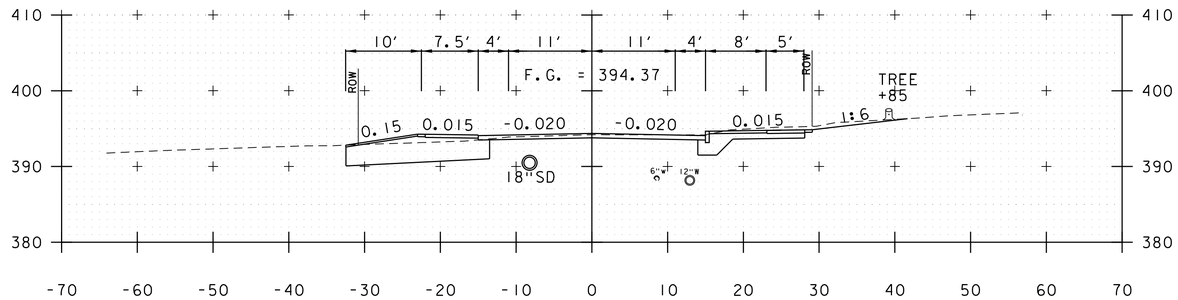

618+71

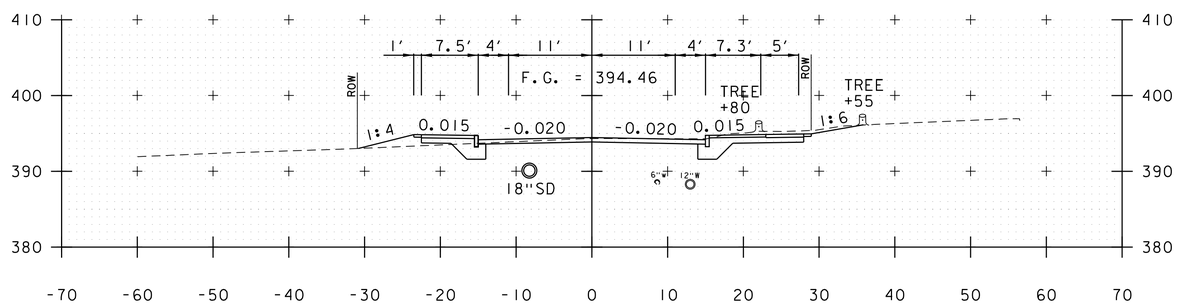

618+50

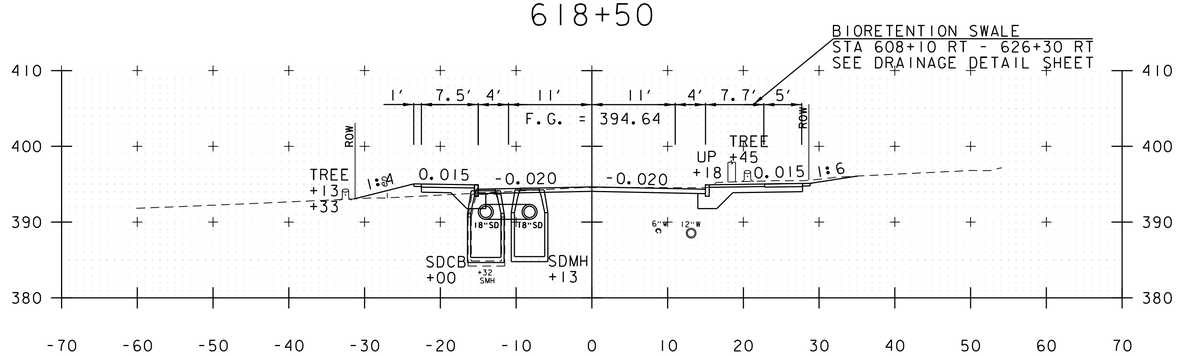

618+00

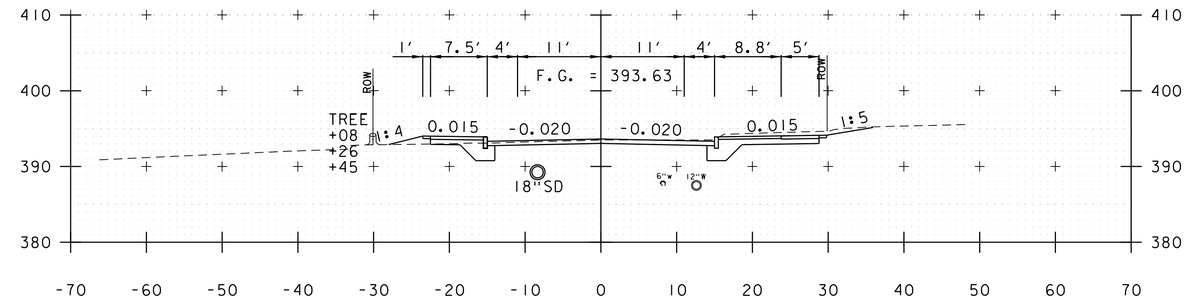

620+00

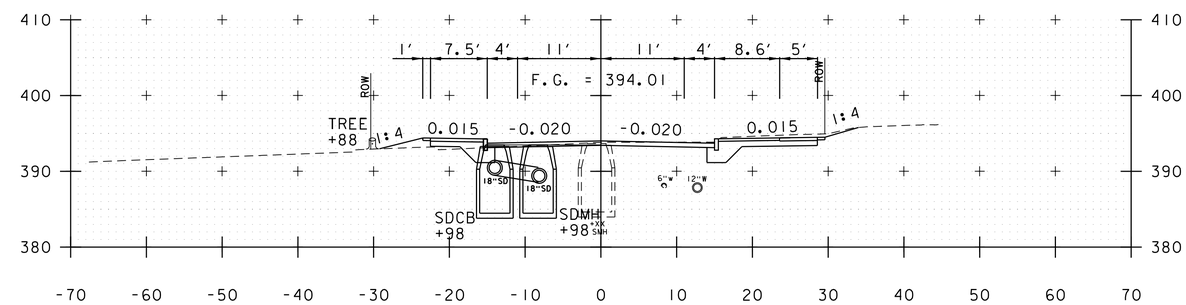

619+50

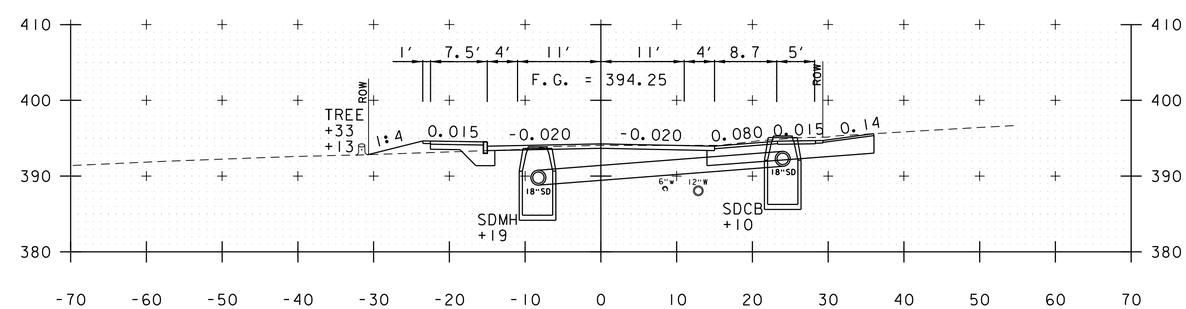

619+00

FEDERAL STREET

PROJECT NAME: ST. ALBANS	
PROJECT NUMBER: HPP 8000(17)	
FILE NAME: 57414_XS_FederalStreet.dgn	PLOT DATE: 3/4/2016
PROJECT LEADER: J.D. SALADINO	DRAWN BY: M.C. SCOTT
DESIGNED BY: M.C. SCOTT	CHECKED BY: M.J. SERVETAS
CROSS SECTIONS	SHEET 191 OF 230

VHB 57414.00

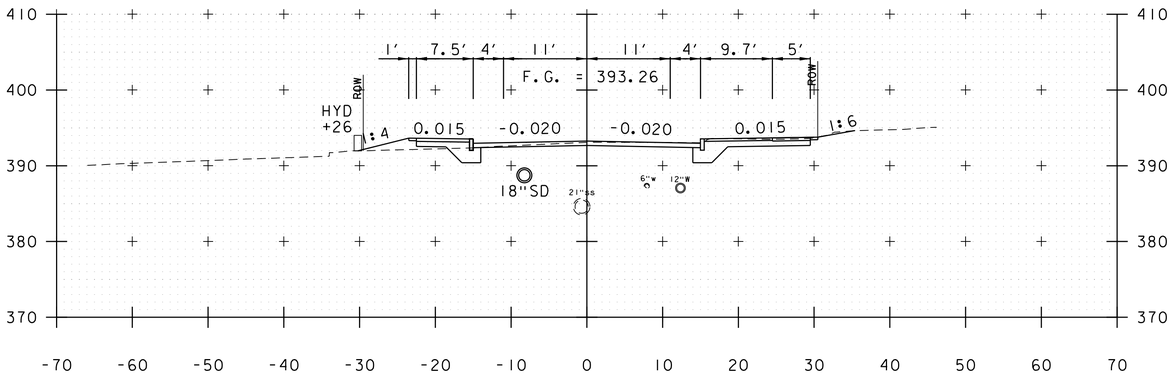

621+00

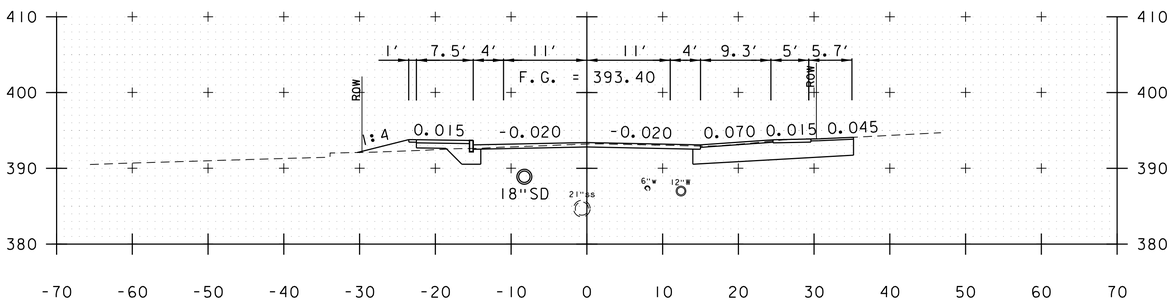

620+71

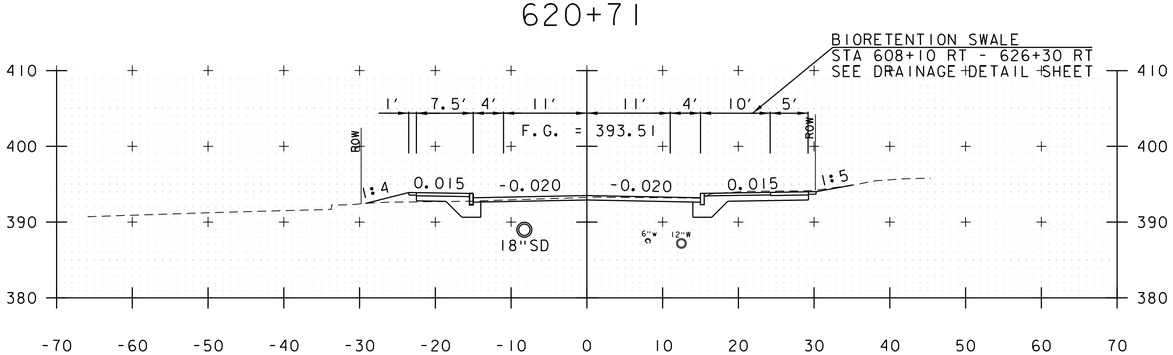

620+50

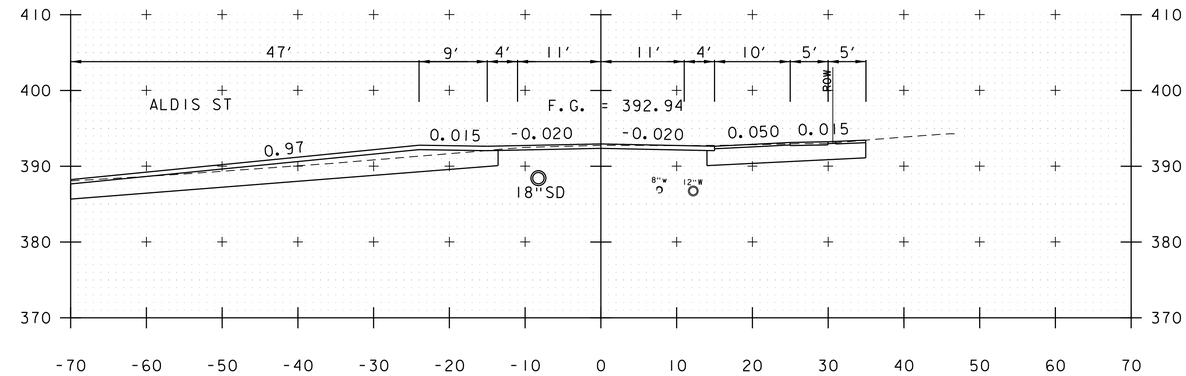

621+62

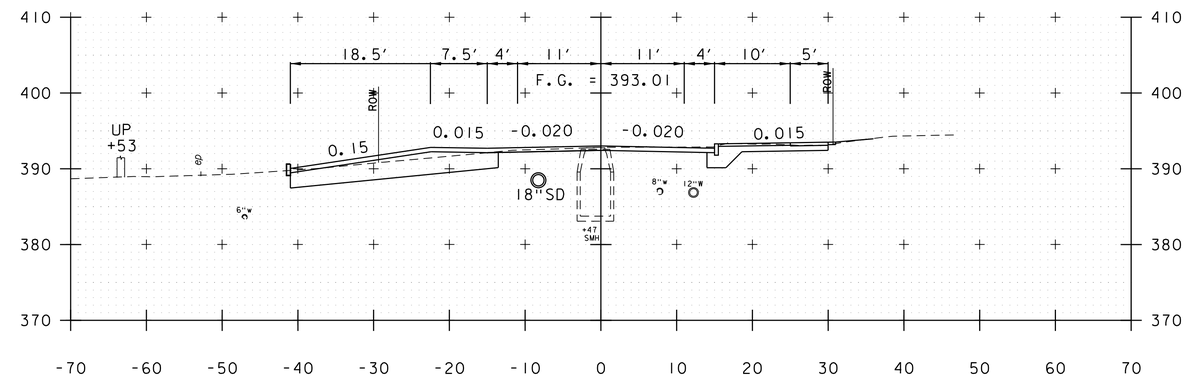

621+50

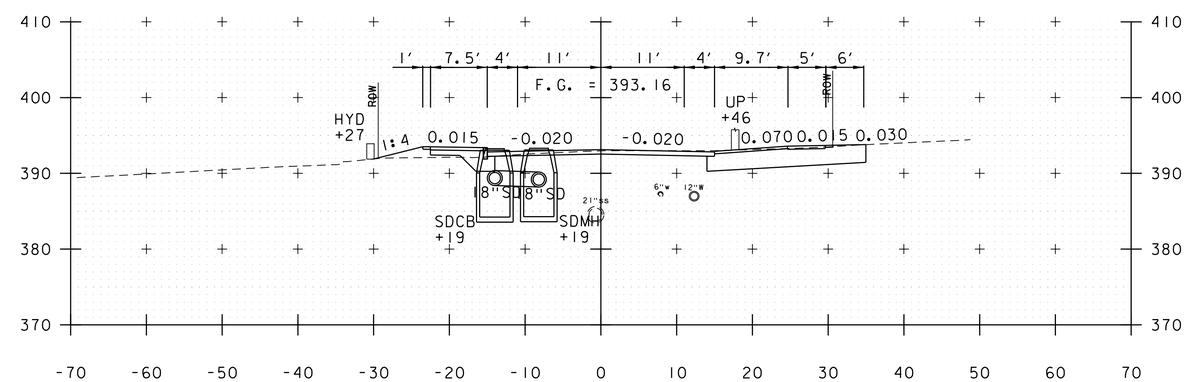

621+19

FEDERAL STREET

PROJECT NAME:	ST. ALBANS
PROJECT NUMBER:	HPP 8000(17)

FILE NAME: 57414_XS_FederalStreet.dgn	PLOT DATE: 3/4/2016
PROJECT LEADER: J.D. SALADINO	DRAWN BY: M.C. SCOTT
DESIGNED BY: M.C. SCOTT	CHECKED BY: M.J. SERVETAS
CROSS SECTIONS	SHEET 192 OF 230

vhb

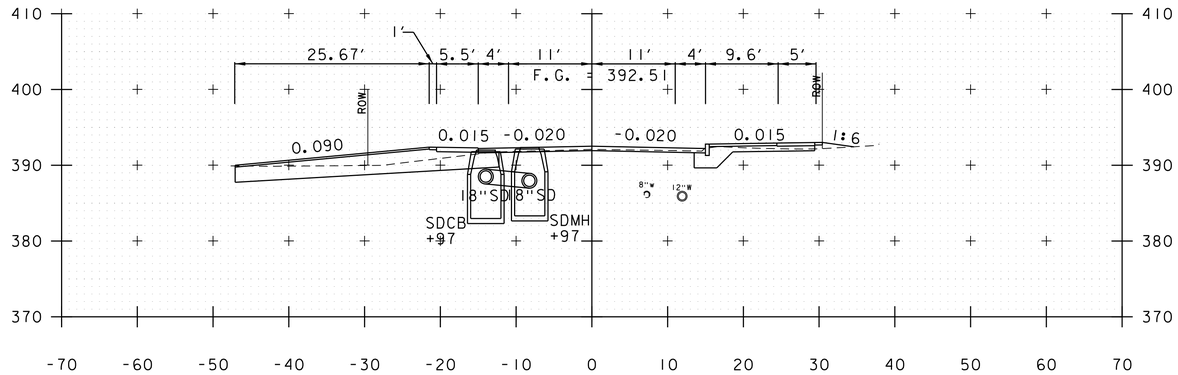

622+50

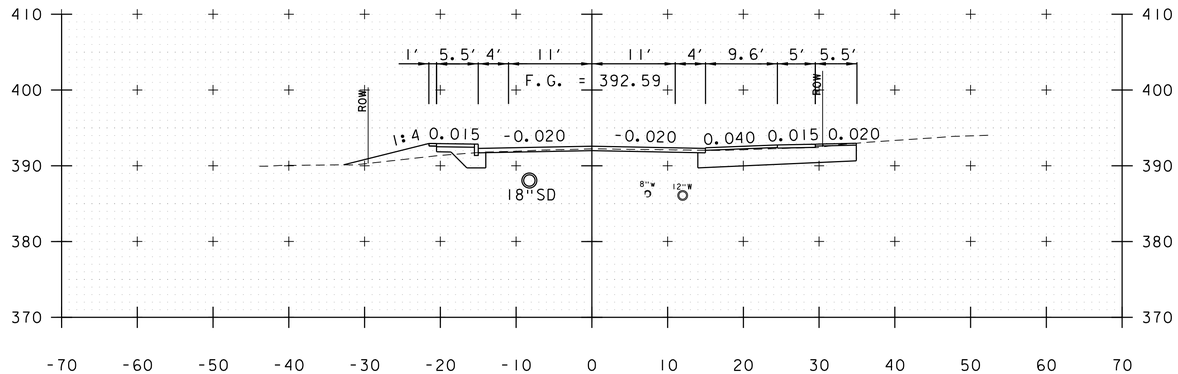

622+29

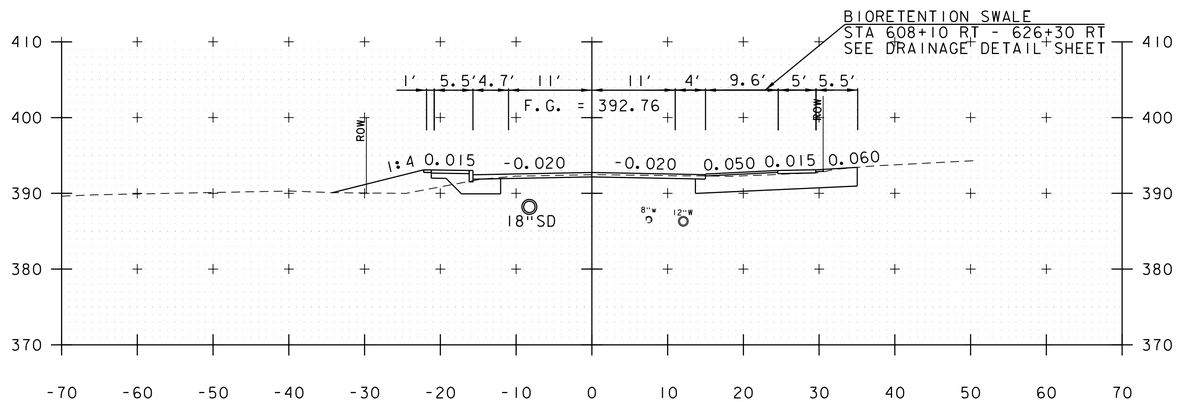

622+00

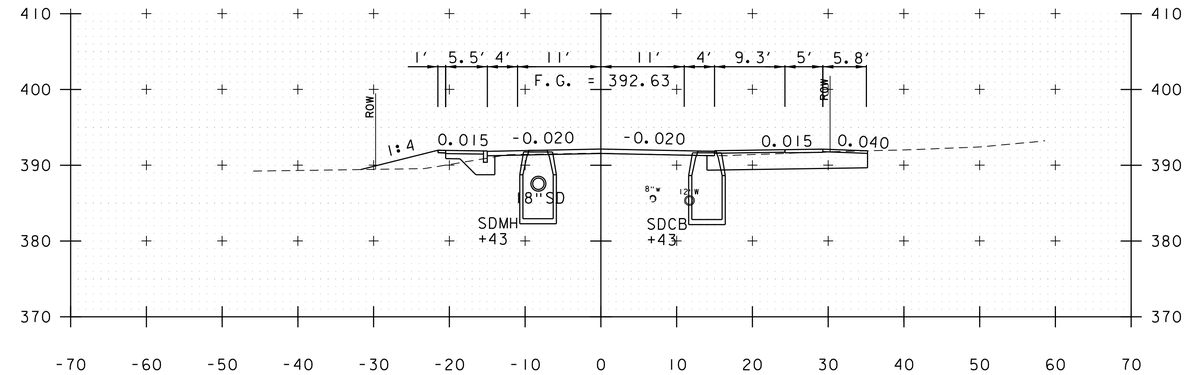

623+25

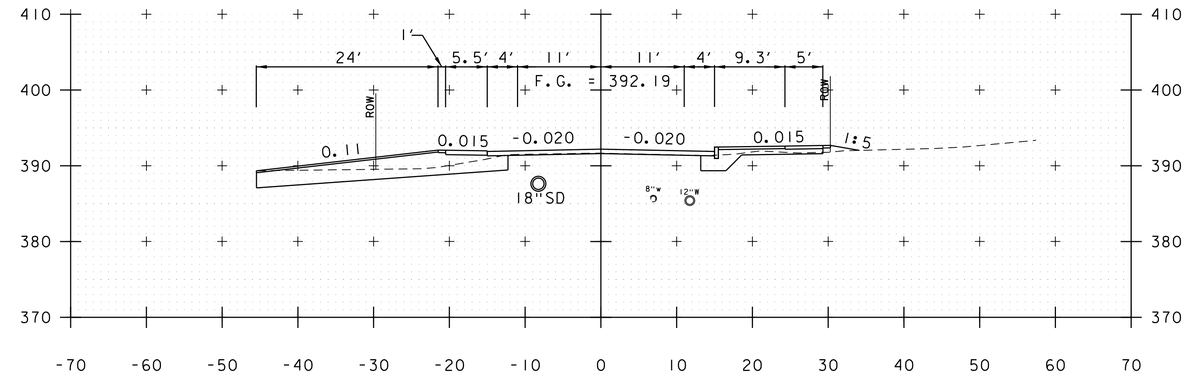

623+12

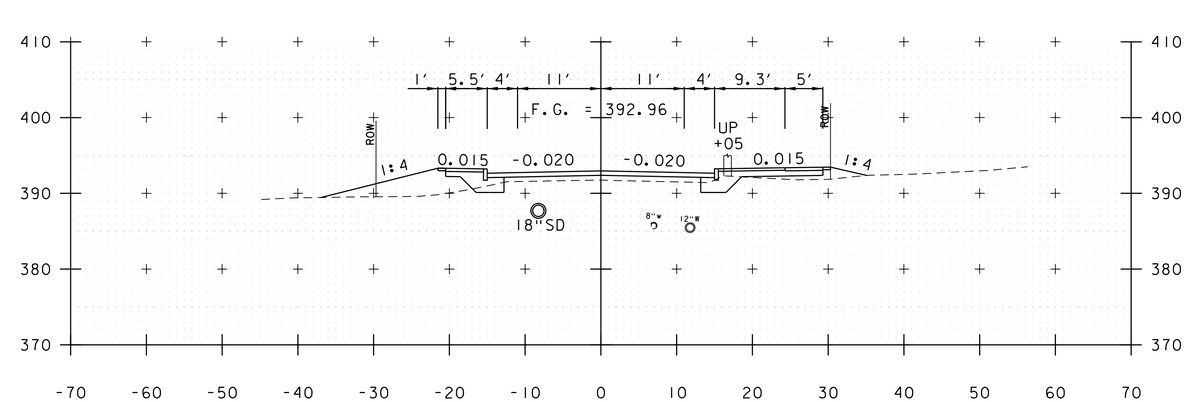

623+00

FEDERAL STREET

PROJECT NAME: ST. ALBANS	
PROJECT NUMBER: HPP 8000(17)	
FILE NAME: 57414_XS_FederalStreet.dgn	PLOT DATE: 3/4/2016
PROJECT LEADER: J.D. SALADINO	DRAWN BY: M.C. SCOTT
DESIGNED BY: M.C. SCOTT	CHECKED BY: M.J. SERVETAS
CROSS SECTIONS	SHEET 193 OF 230

VHB 57414.00

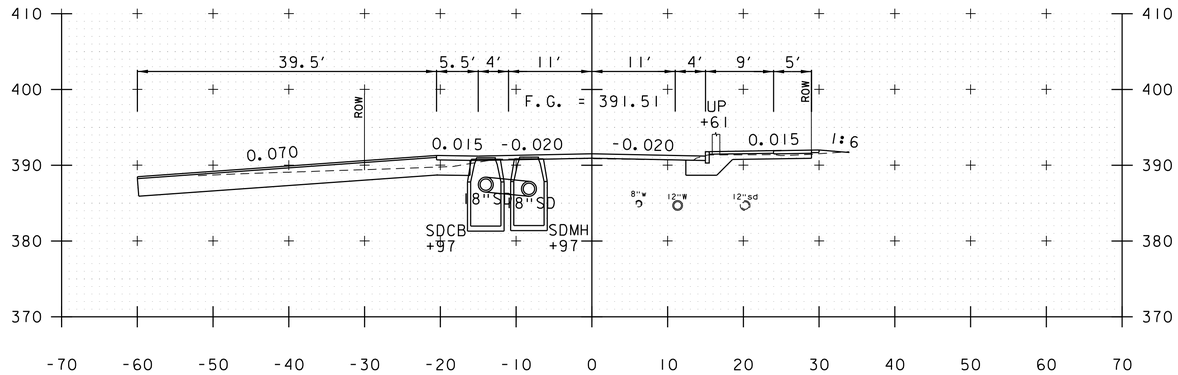

624+50

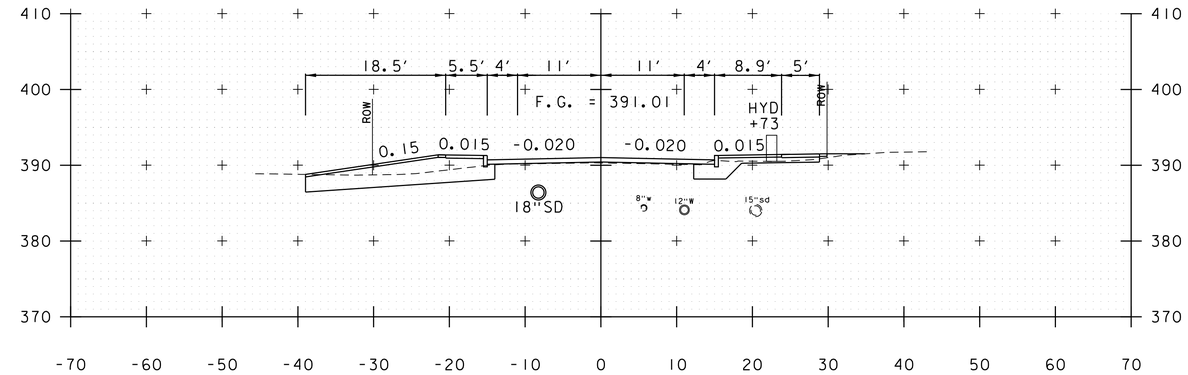

625+50

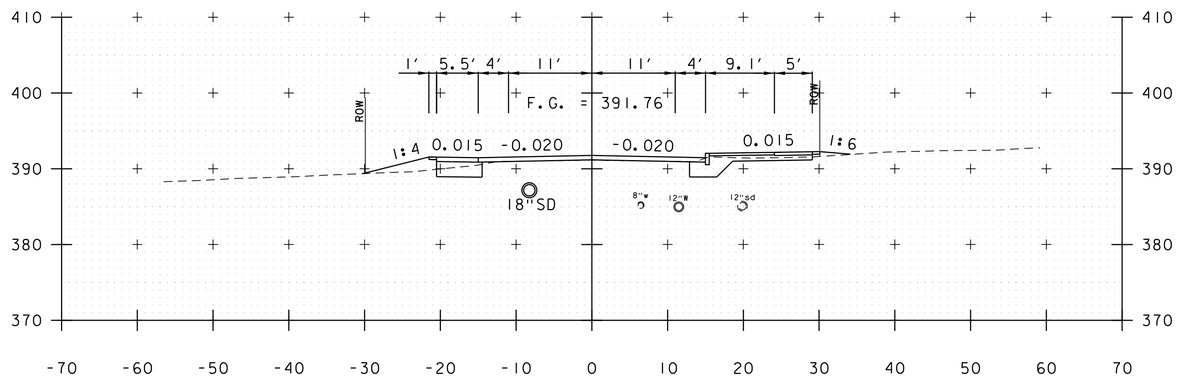

624+00

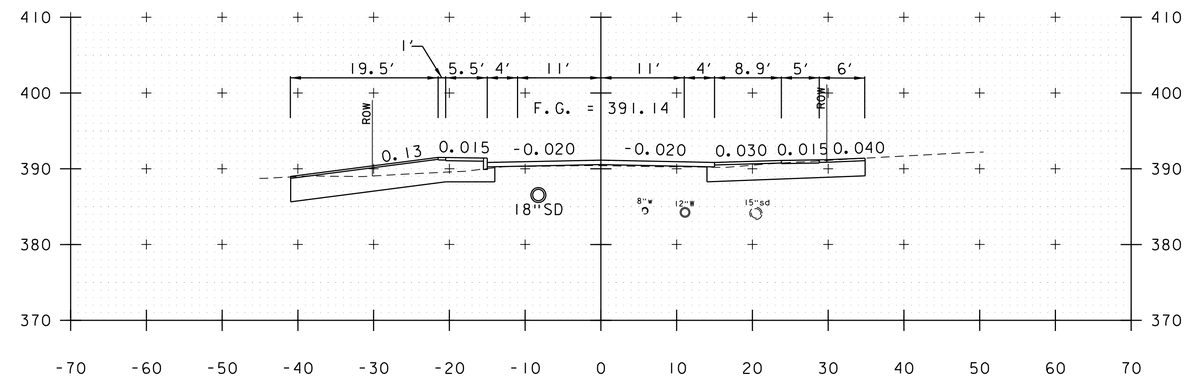

625+22

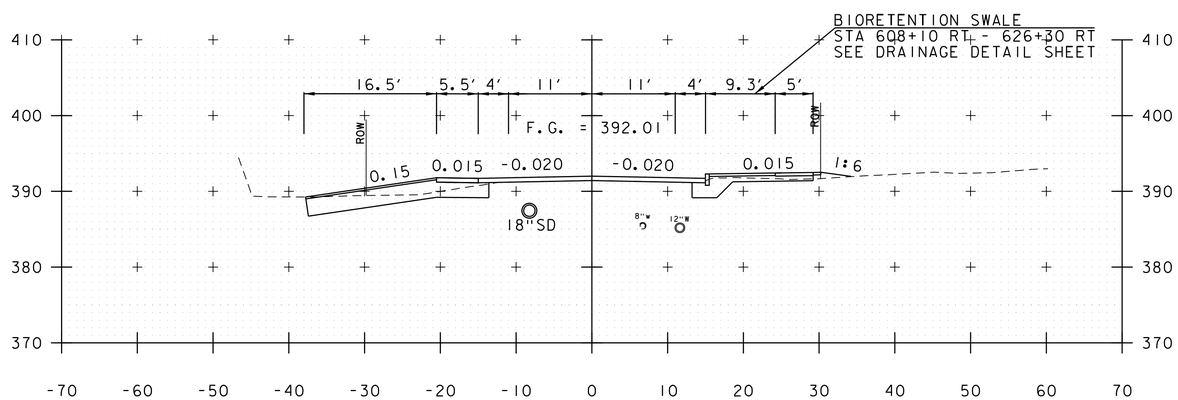

623+50

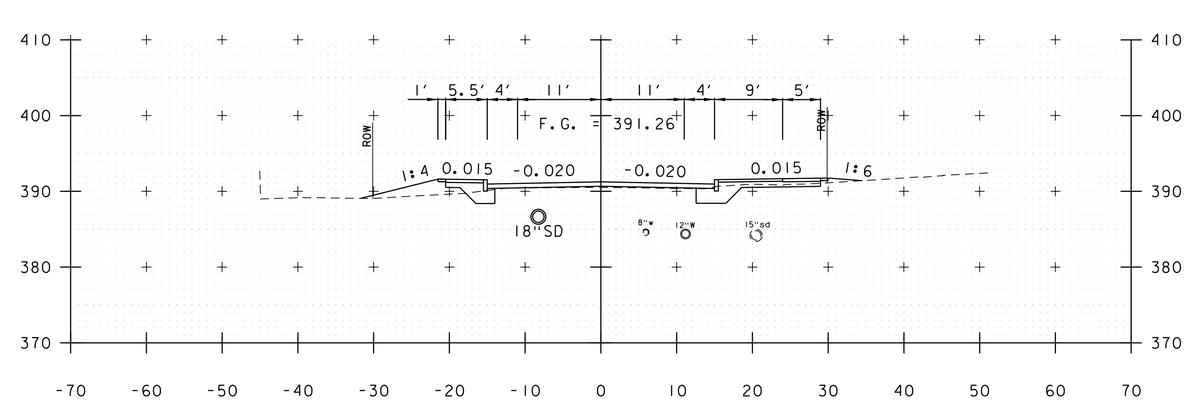

625+00

FEDERAL STREET

PROJECT NAME: ST. ALBANS	
PROJECT NUMBER: HPP 8000(17)	
FILE NAME: 57414_XS_FederalStreet.dgn	PLOT DATE: 3/4/2016
PROJECT LEADER: J.D. SALADINO	DRAWN BY: M.C. SCOTT
DESIGNED BY: M.C. SCOTT	CHECKED BY: M.J. SERVETAS
CROSS SECTIONS	SHEET 194 OF 230

VHB 57414.00

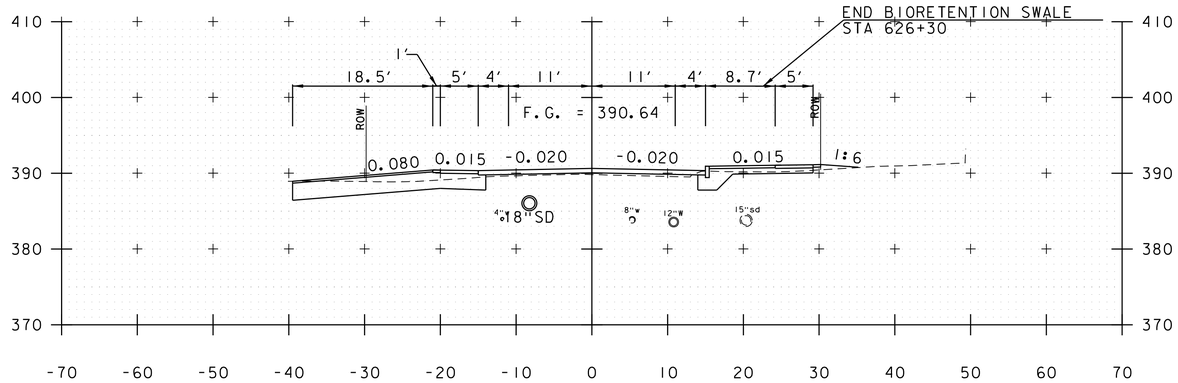

626+23

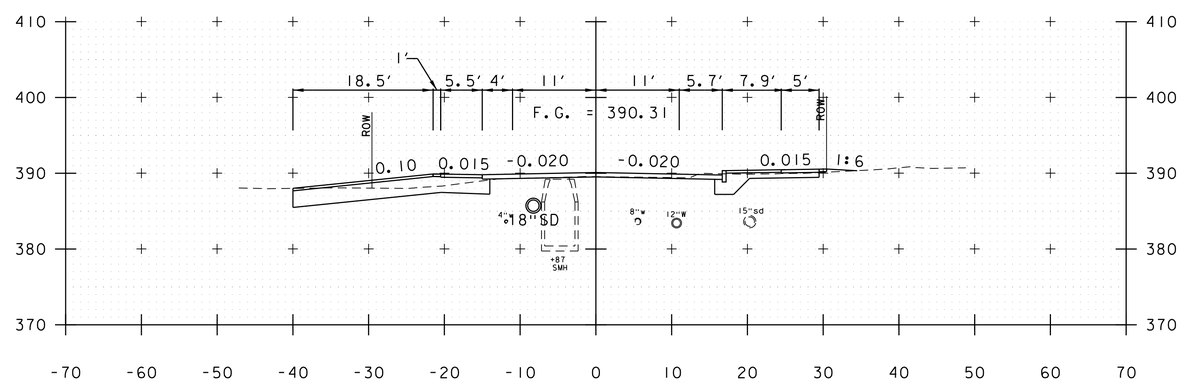

626+75

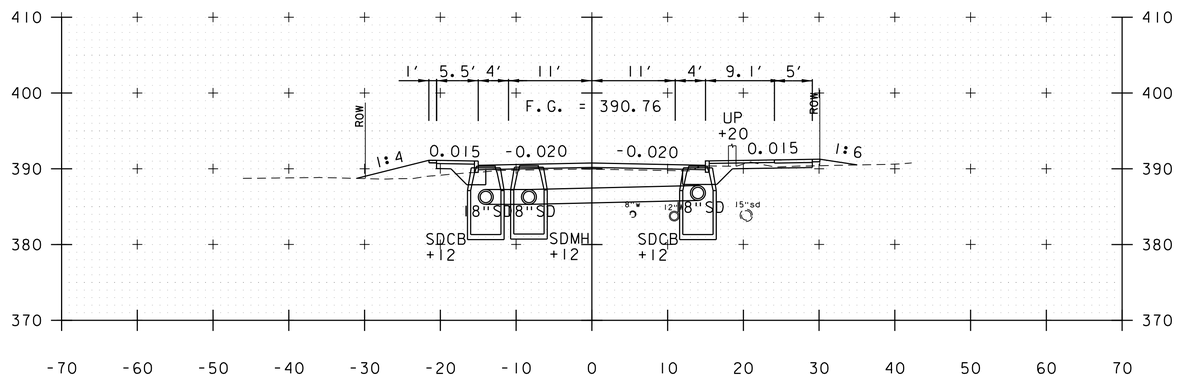

626+00

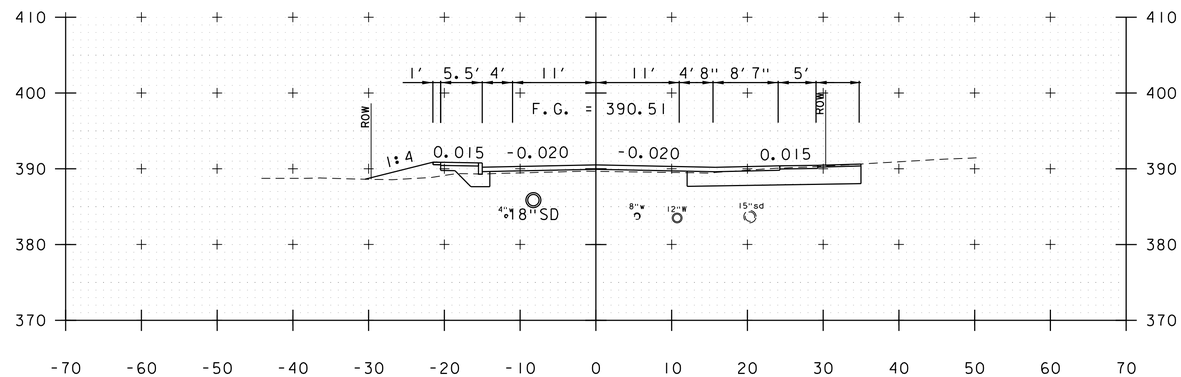

626+50

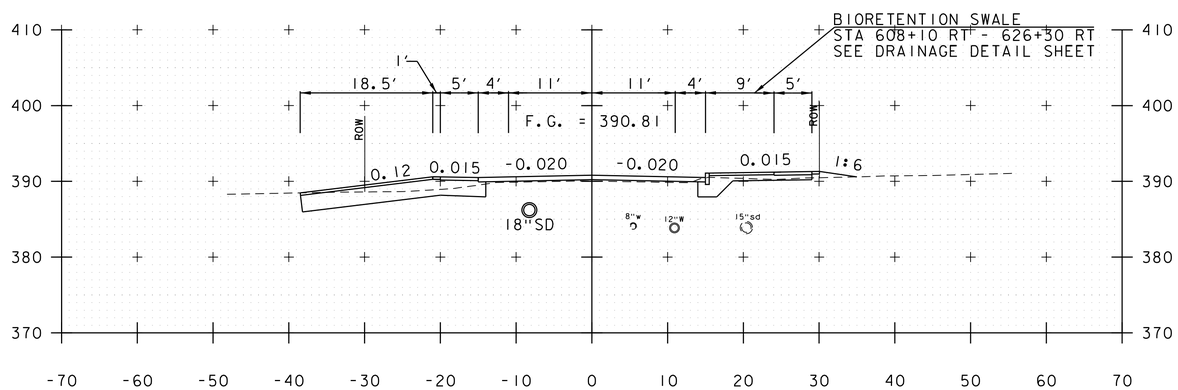

625+90

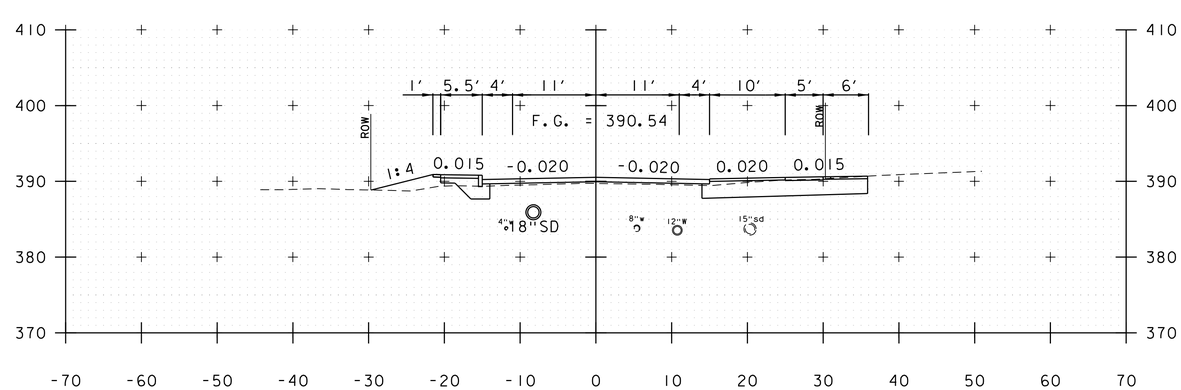

626+42

FEDERAL STREET

PROJECT NAME: ST. ALBANS	
PROJECT NUMBER: HPP 8000(17)	
FILE NAME: 57414_XS_FederalStreet.dgn	PLOT DATE: 3/4/2016
PROJECT LEADER: J.D. SALADINO	DRAWN BY: M.C. SCOTT
DESIGNED BY: M.C. SCOTT	CHECKED BY: M.J. SERVETAS
CROSS SECTIONS	SHEET 195 OF 230

VHB 57414.00

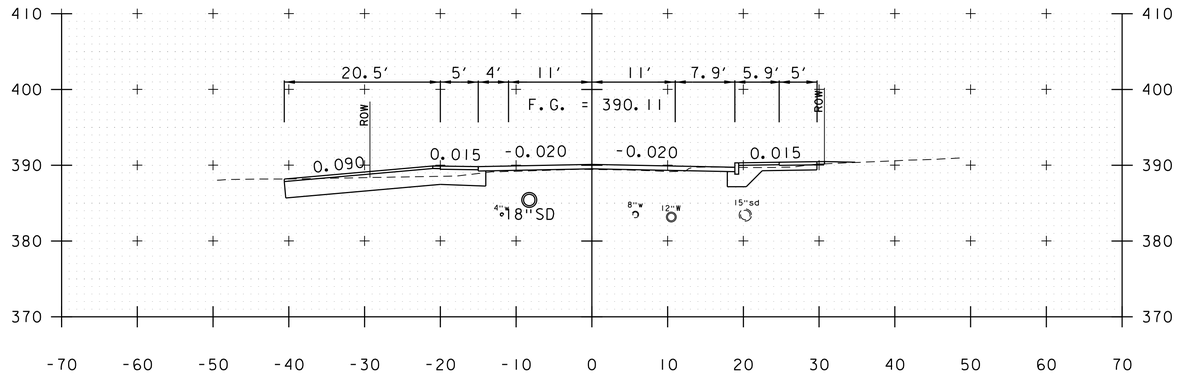

627+28

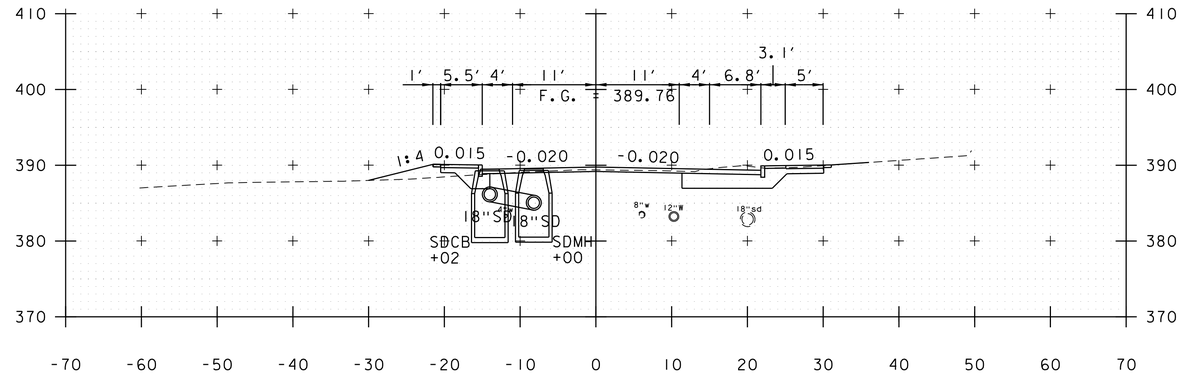

628+00

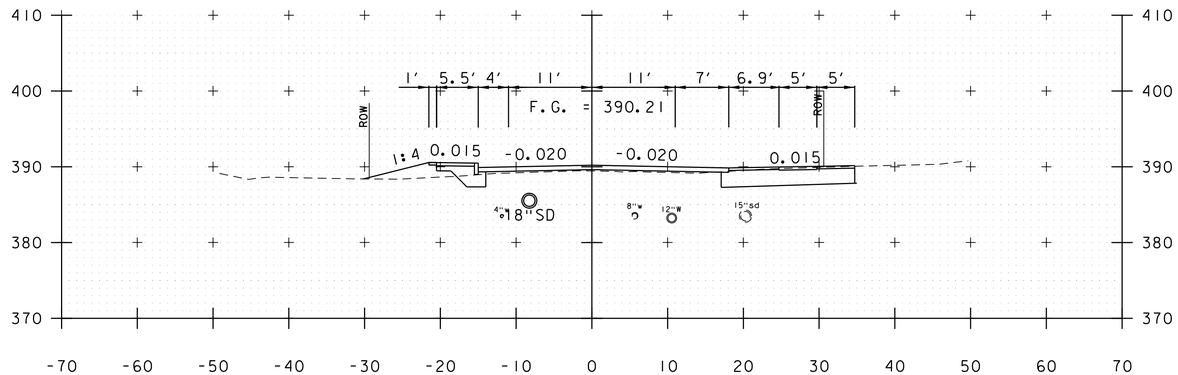

627+08

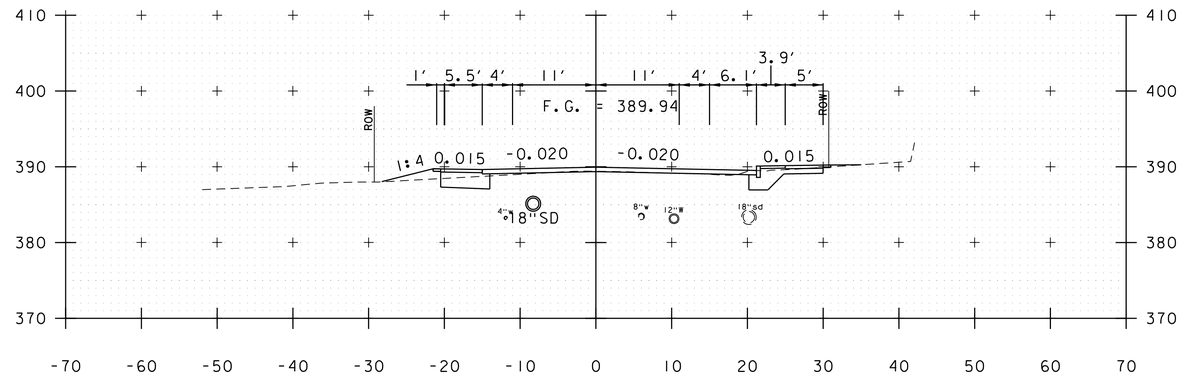

627+86

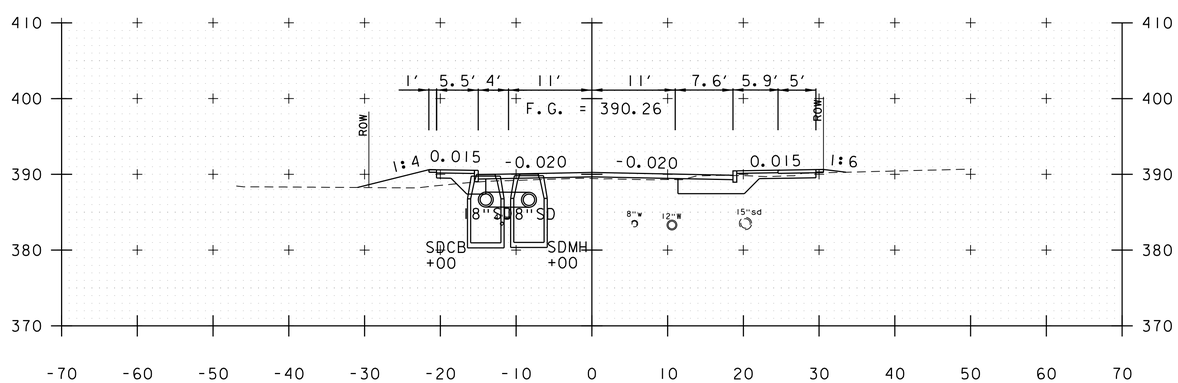

627+00

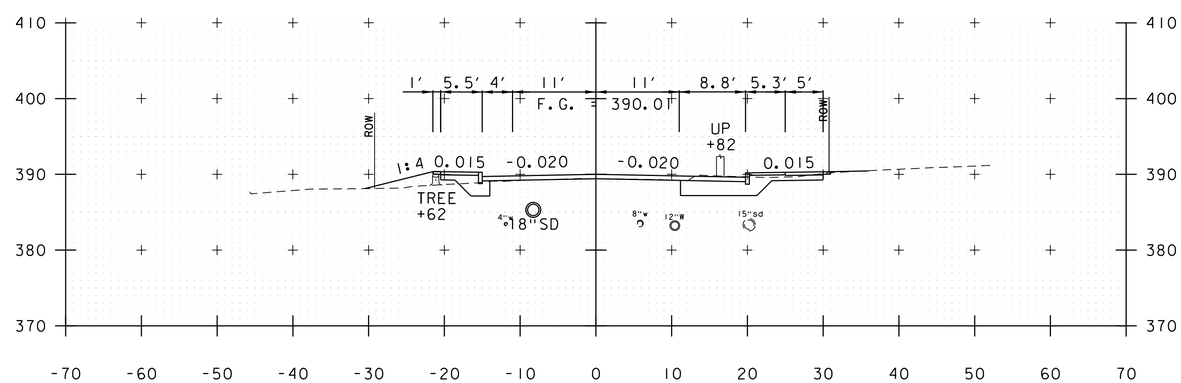

627+50

FEDERAL STREET

PROJECT NAME: ST. ALBANS	
PROJECT NUMBER: HPP 8000(17)	
FILE NAME: 57414_XS_FederalStreet.dgn	PLOT DATE: 3/4/2016
PROJECT LEADER: J.D. SALADINO	DRAWN BY: M.C. SCOTT
DESIGNED BY: M.C. SCOTT	CHECKED BY: M.J. SERVETAS
CROSS SECTIONS	SHEET 196 OF 230

VHB 57414.00

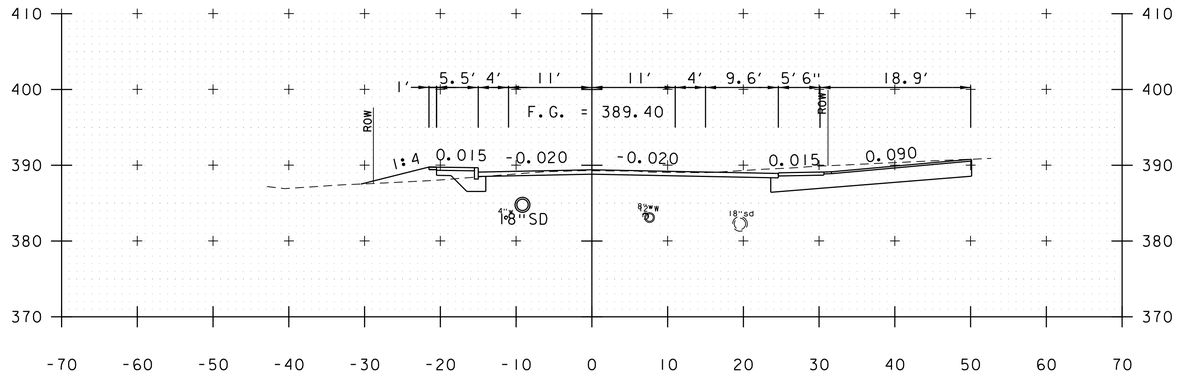

628+70

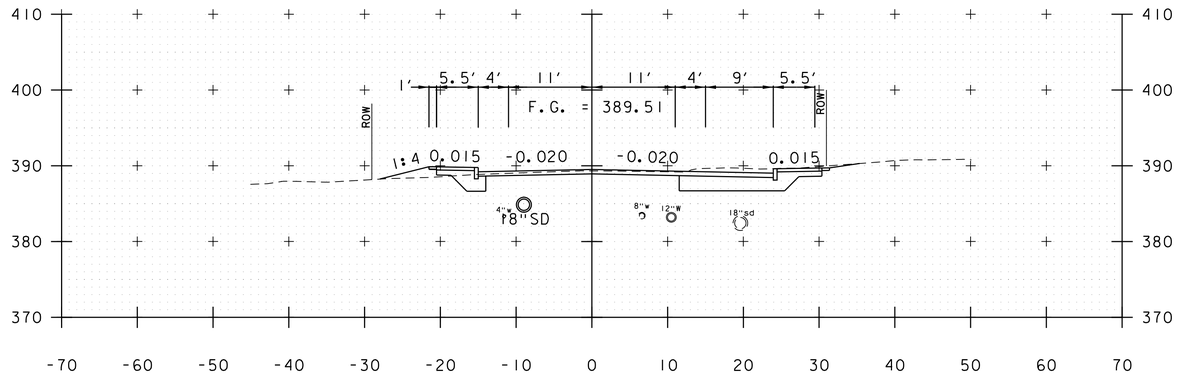

628+50

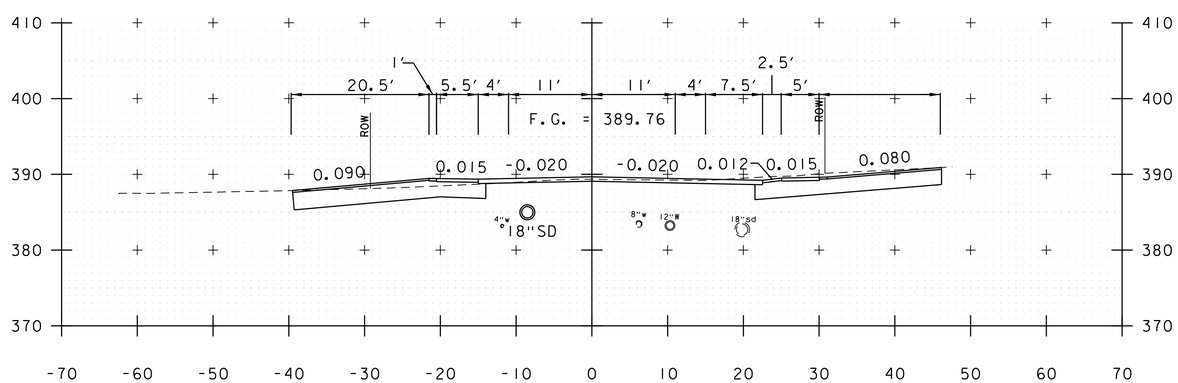

628+20

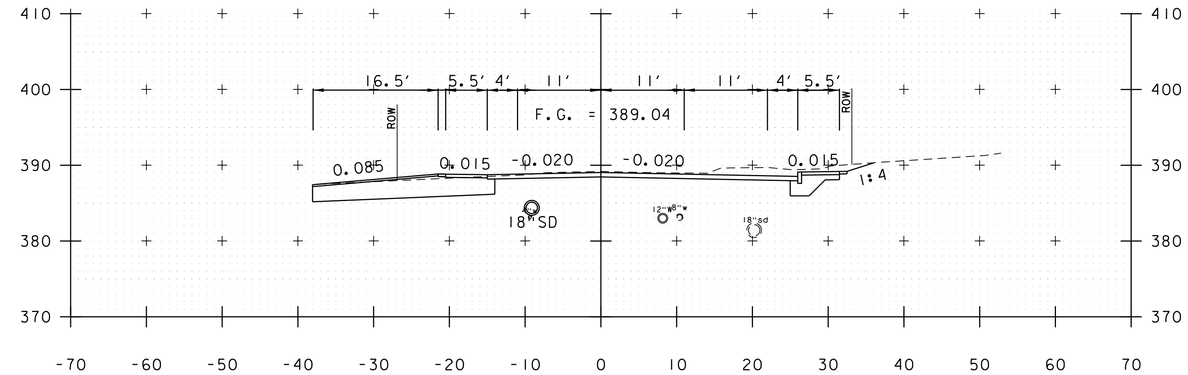

629+67

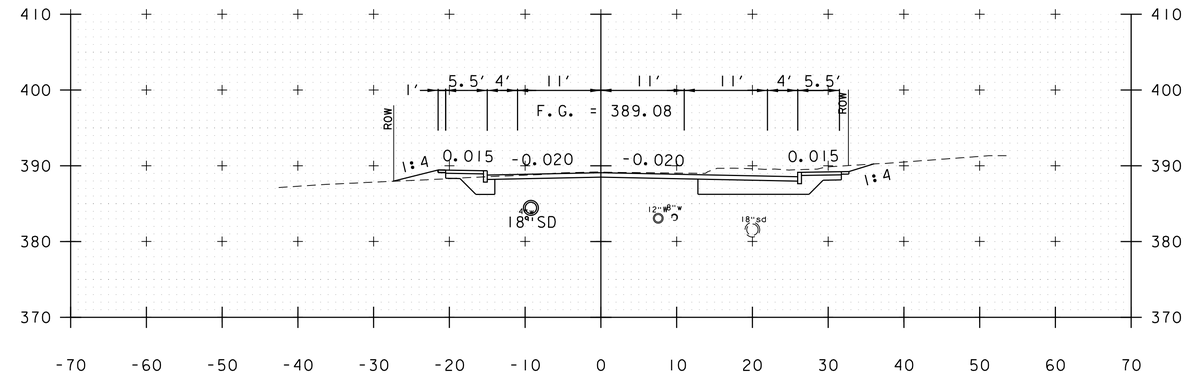

629+50

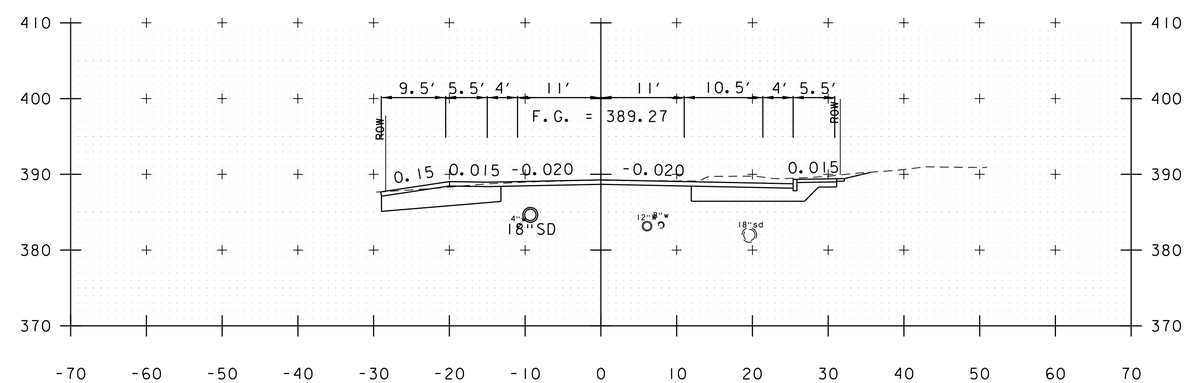

629+00

FEDERAL STREET

PROJECT NAME: ST. ALBANS	
PROJECT NUMBER: HPP 8000(17)	
FILE NAME: 57414_XS_FederalStreet.dgn	PLOT DATE: 3/4/2016
PROJECT LEADER: J.D. SALADINO	DRAWN BY: M.C. SCOTT
DESIGNED BY: M.C. SCOTT	CHECKED BY: M.J. SERVETAS
CROSS SECTIONS	SHEET 197 OF 230

VHB 57414.00

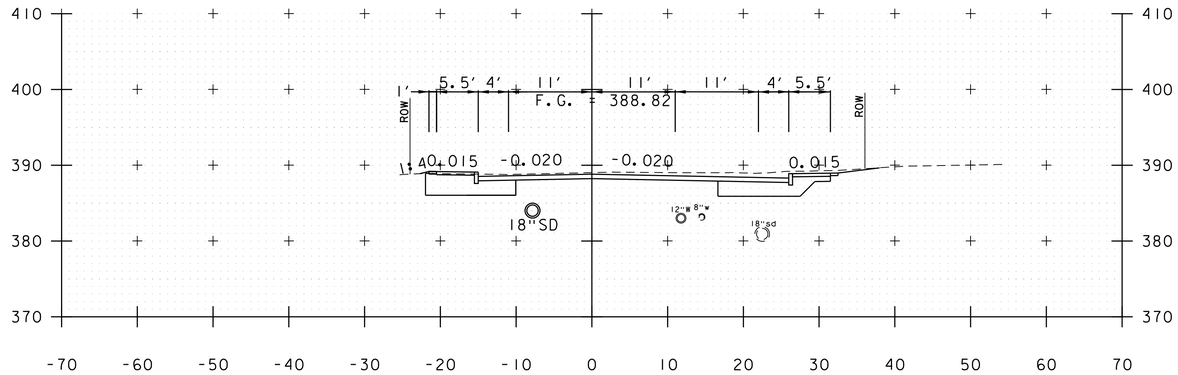

630+50

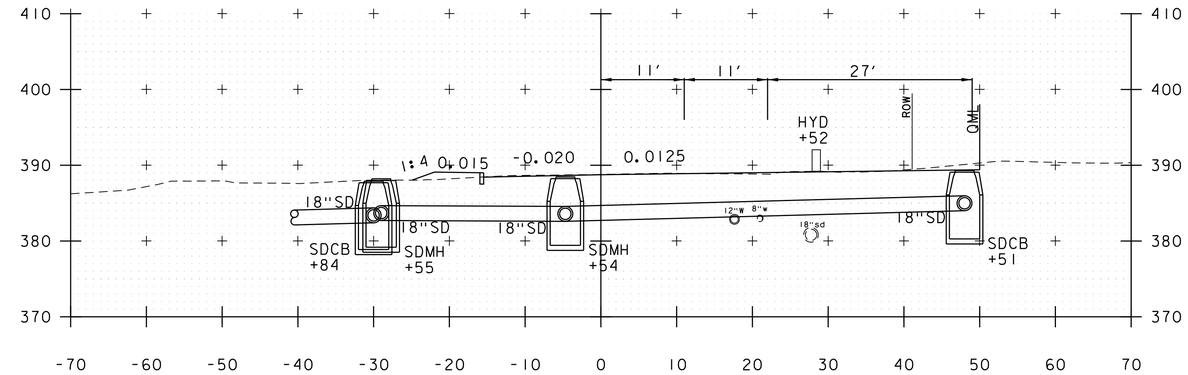

631+50

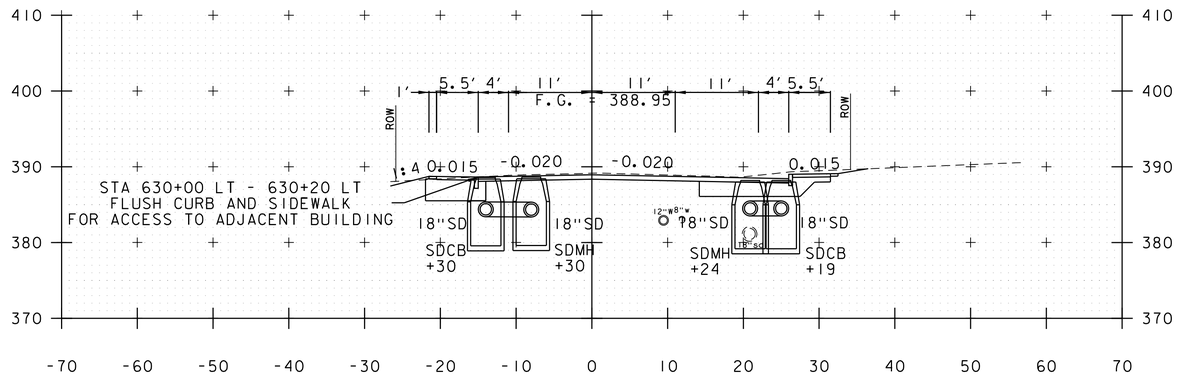

630+00

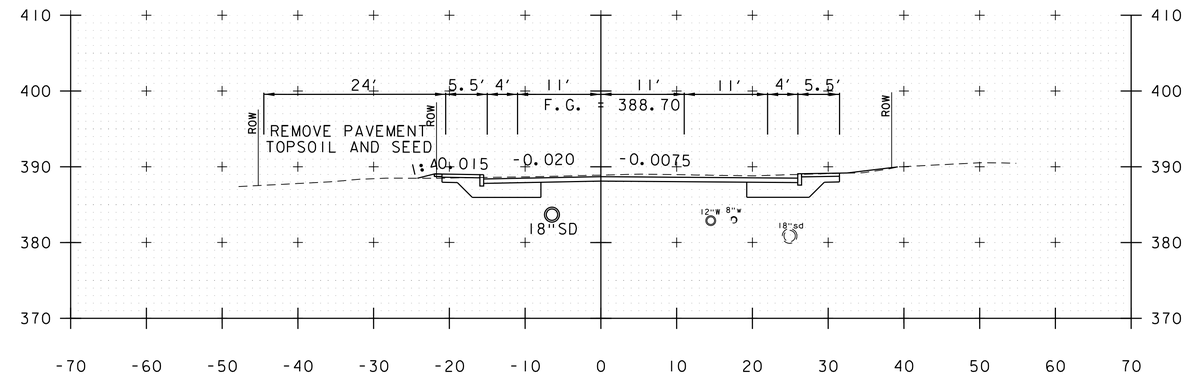

631+00

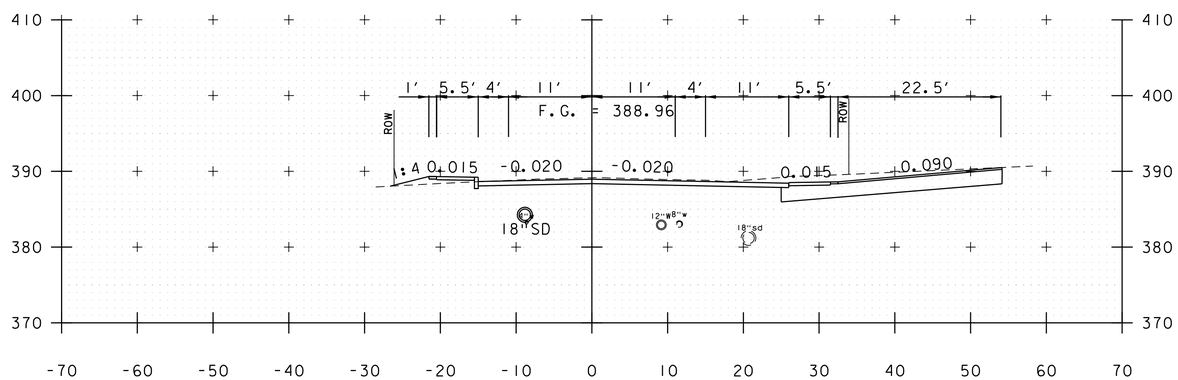

629+90

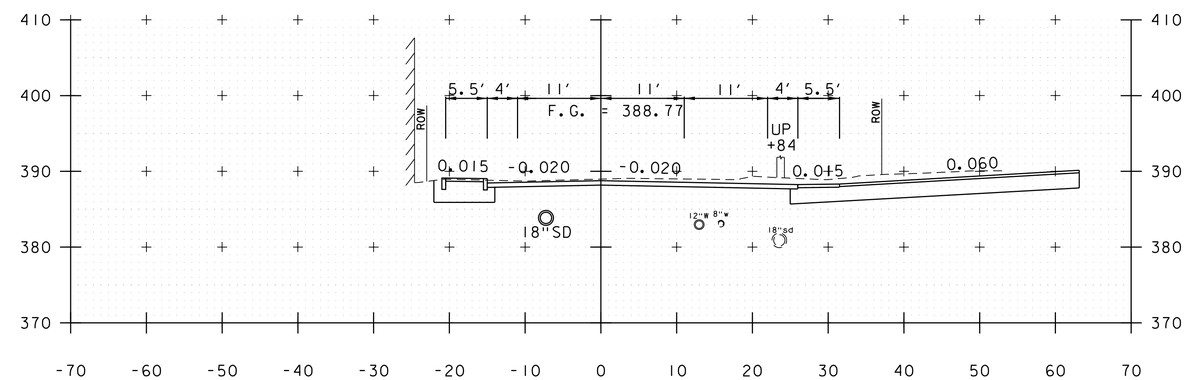

630+71

FEDERAL STREET

PROJECT NAME: ST. ALBANS	
PROJECT NUMBER: HPP 8000(17)	
FILE NAME: 57414_XS_FederalStreet.dgn	PLOT DATE: 3/4/2016
PROJECT LEADER: J.D. SALADINO	DRAWN BY: M.C. SCOTT
DESIGNED BY: M.C. SCOTT	CHECKED BY: M.J. SERVETAS
CROSS SECTIONS	SHEET 198 OF 230

VHB 57414.00

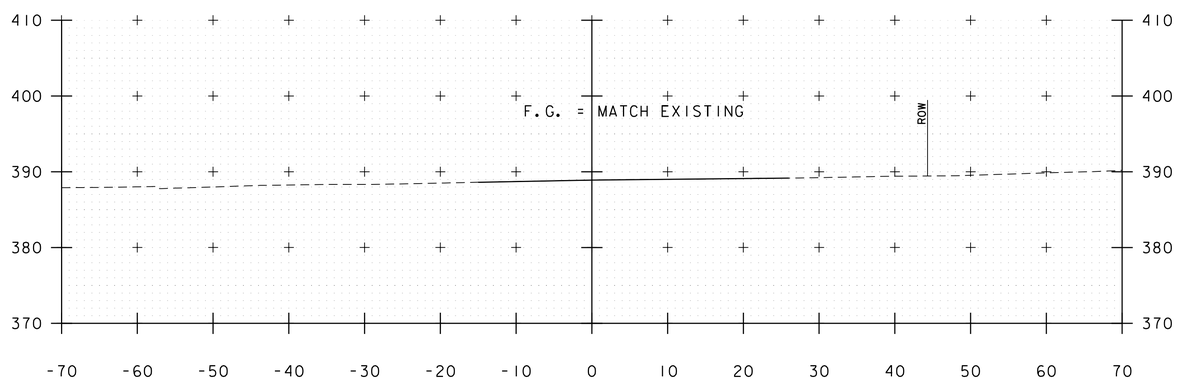

632+22

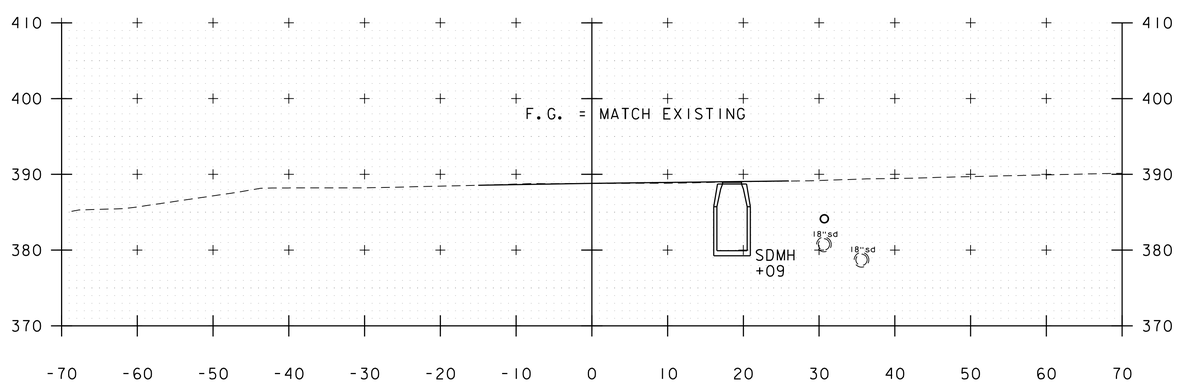

632+00

FEDERAL STREET

PROJECT NAME: ST. ALBANS	
PROJECT NUMBER: HPP 8000(17)	
FILE NAME: 57414_XS_FederalStreet.dgn	PLOT DATE: 3/4/2016
PROJECT LEADER: J.D. SALADINO	DRAWN BY: M.C. SCOTT
DESIGNED BY: M.C. SCOTT	CHECKED BY: M.J. SERVETAS
CROSS SECTIONS	SHEET 199 OF 230

VHB 57414.00

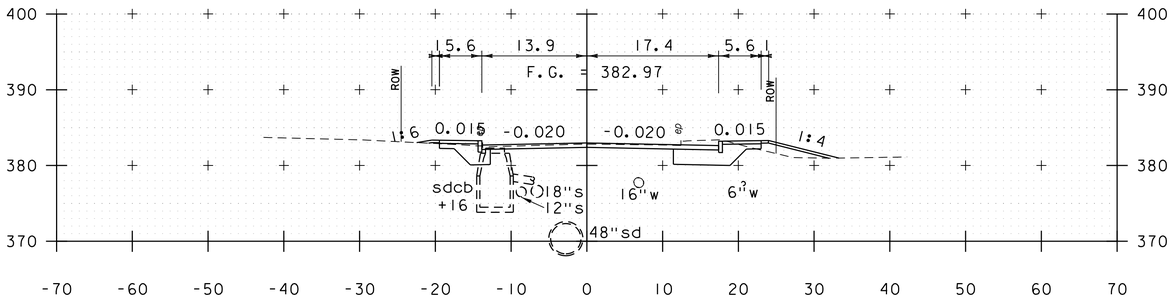

801+00

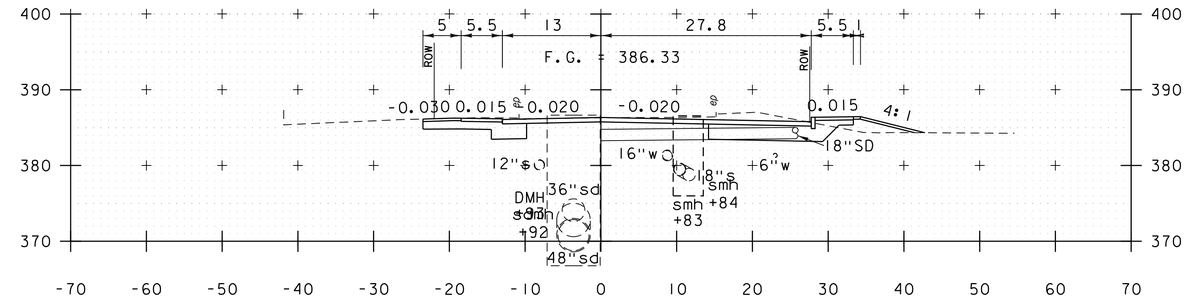

801+81

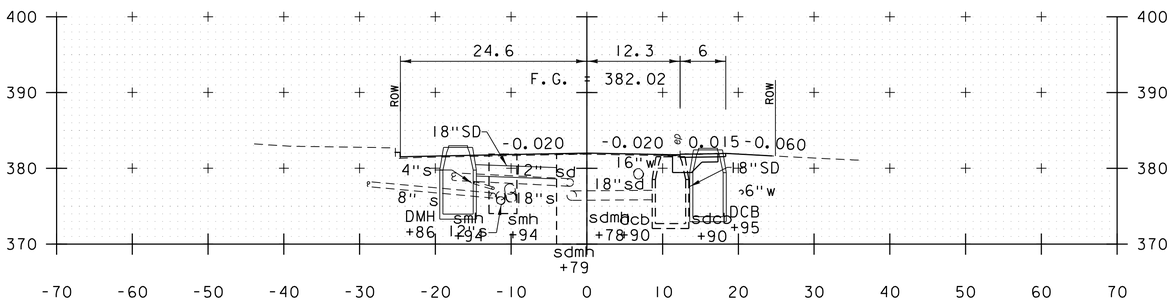

800+77

STATION 800+71 RT
BEGIN 6.5:1 TAPER

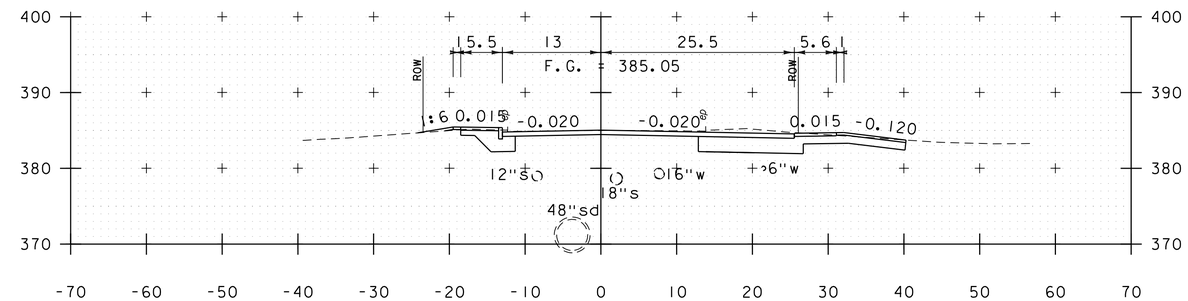

801+50

STATION 801+45 RT
END 6.5:1 TAPER

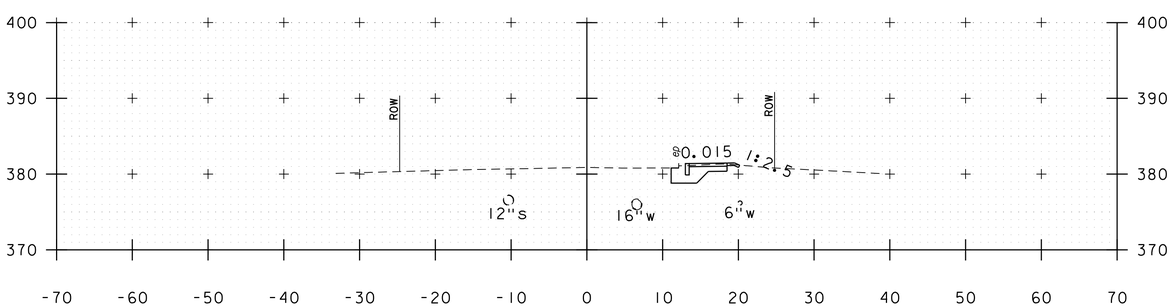

800+50

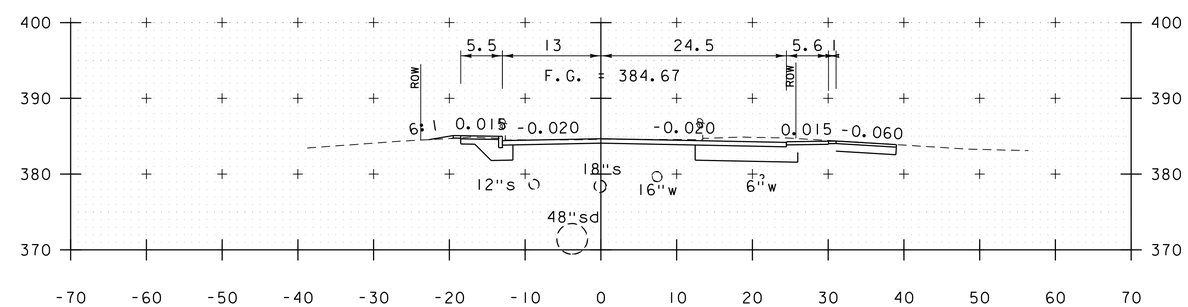

801+41

LOWER NEWTON ROAD

PROJECT NAME: ST. ALBANS	
PROJECT NUMBER: HPP 8000(17)	
FILE NAME: 57414_XS_LowerNewton.dgn	PLOT DATE: 3/4/2016
PROJECT LEADER: J.D. SALADINO	DRAWN BY: O.M. DARISSE
DESIGNED BY: D.M. PECK	CHECKED BY: M.J. SERVETAS
LOWER NEWTON ROAD CROSS SECTIONS	SHEET 200 OF 230

vhb

VHB 57414.00

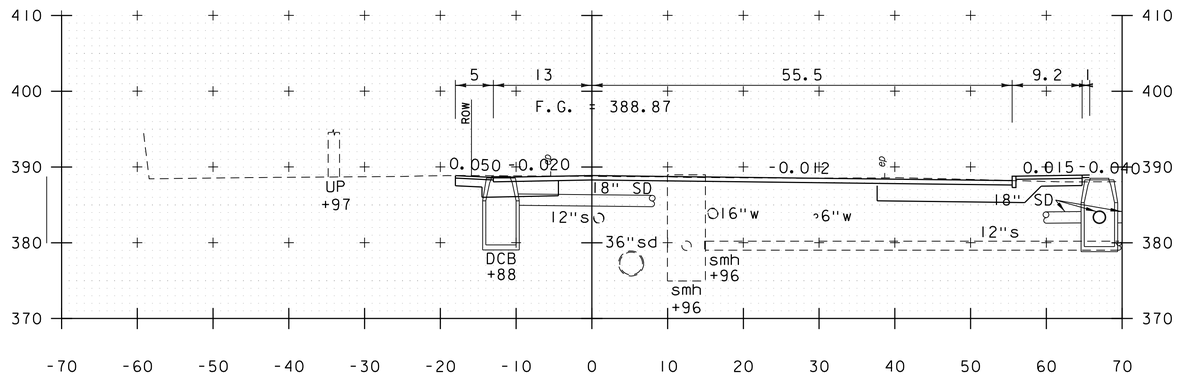

802+69

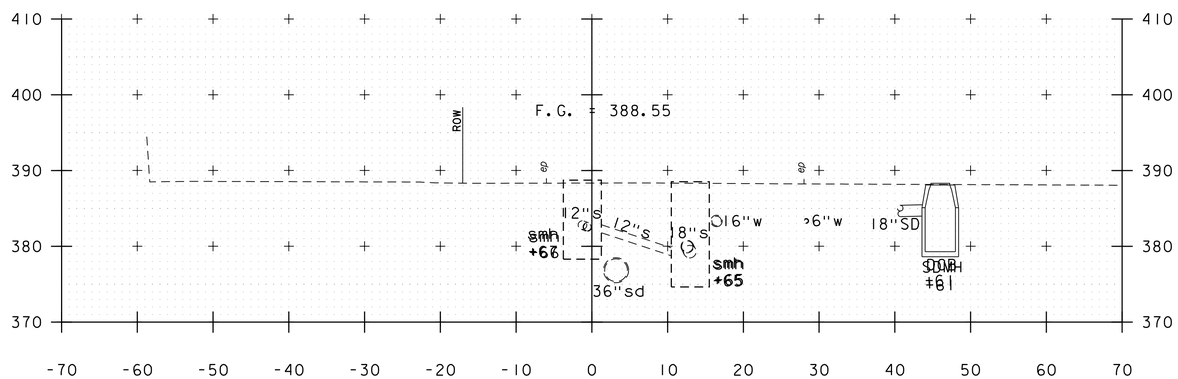

802+50

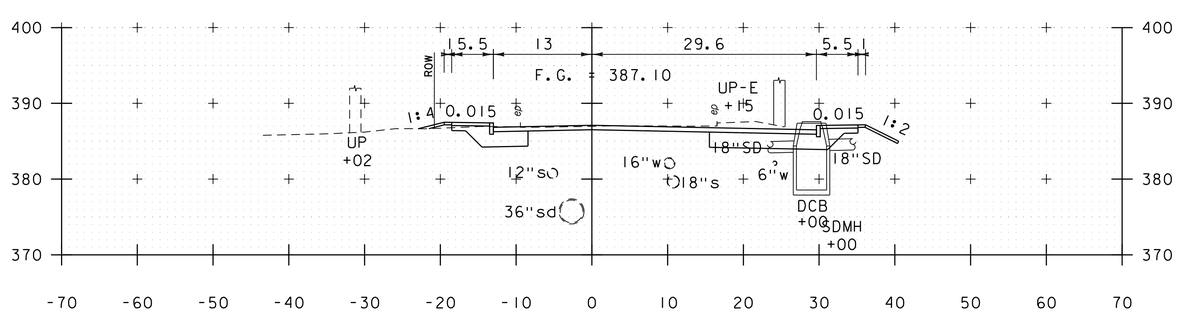

802+00

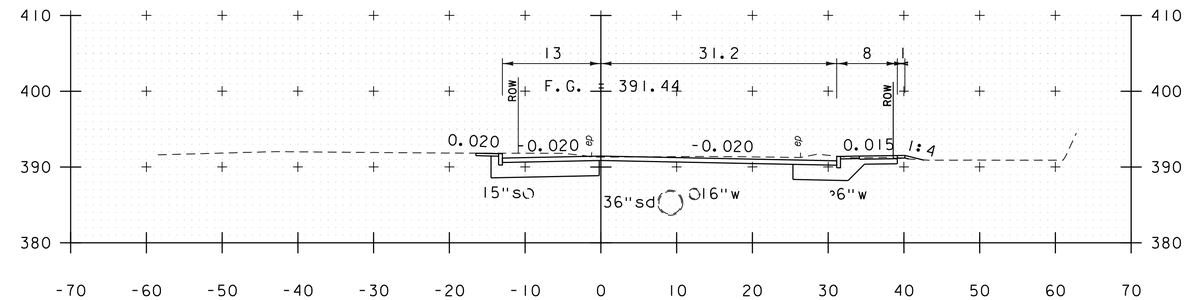

804+00

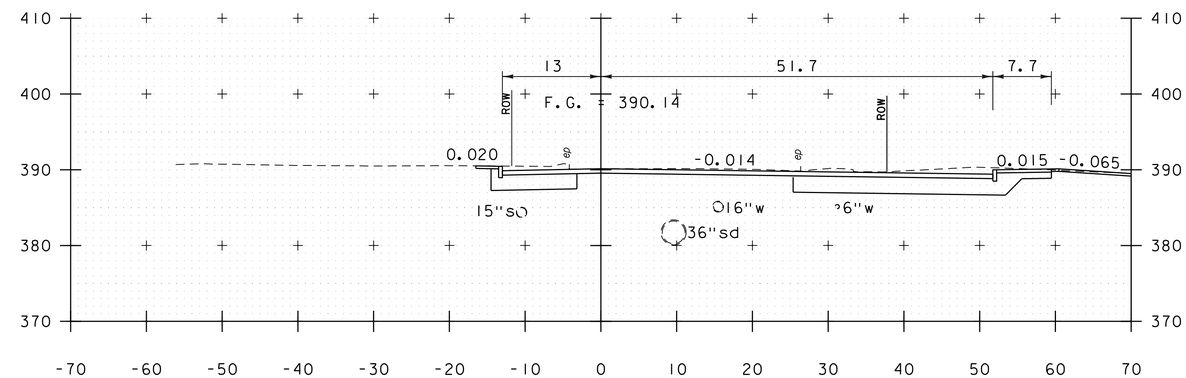

803+50

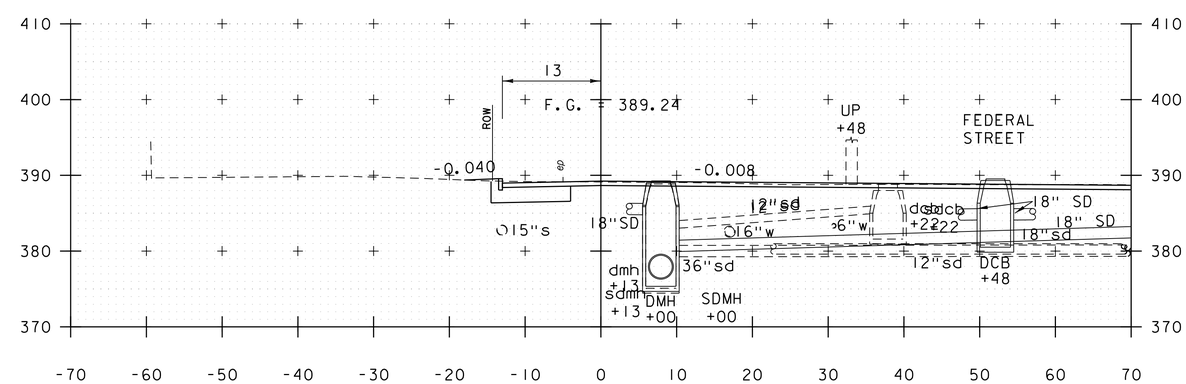

803+00

LOWER NEWTON ROAD

PROJECT NAME: ST. ALBANS	
PROJECT NUMBER: HPP 8000(17)	
FILE NAME: 57414_XS_LowerNewton.dgn	PLOT DATE: 3/4/2016
PROJECT LEADER: J.D. SALADINO	DRAWN BY: O.M. DARISSE
DESIGNED BY: D.M. PECK	CHECKED BY: M.J. SERVETAS
LOWER NEWTON ROAD CROSS SECTIONS	SHEET 201 OF 230

vhb

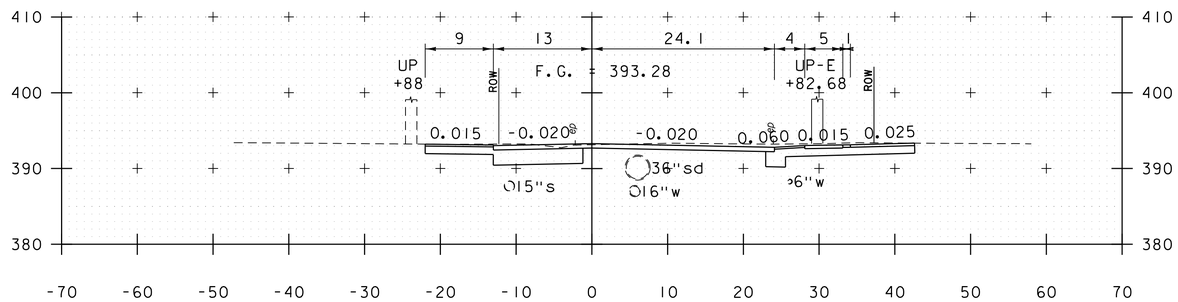

804+68

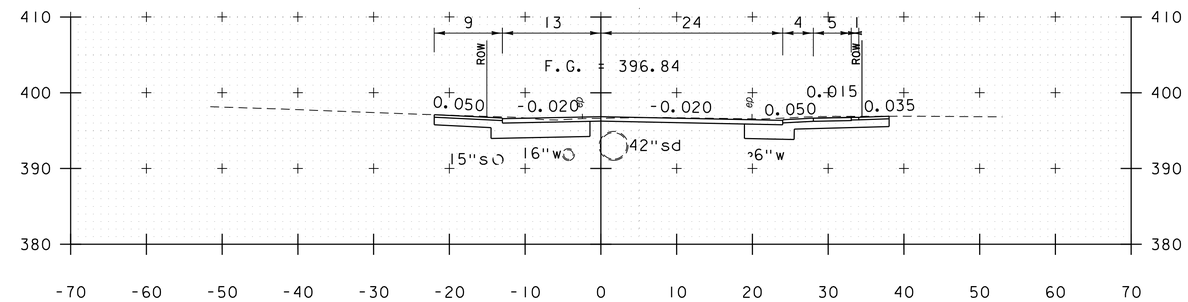

805+59

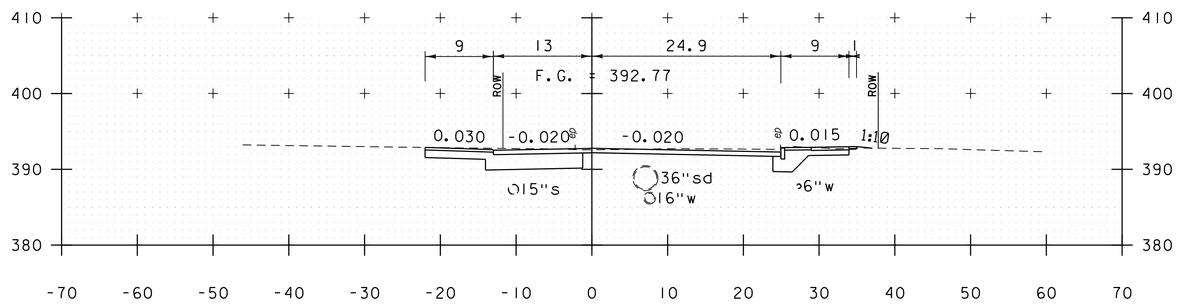

804+50

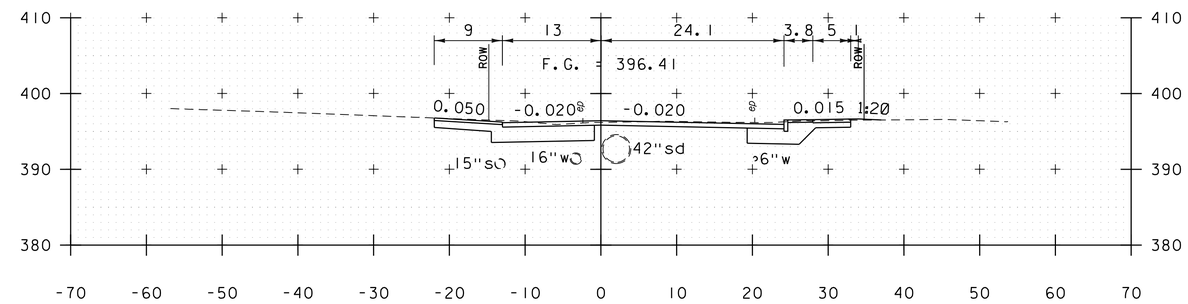

805+50

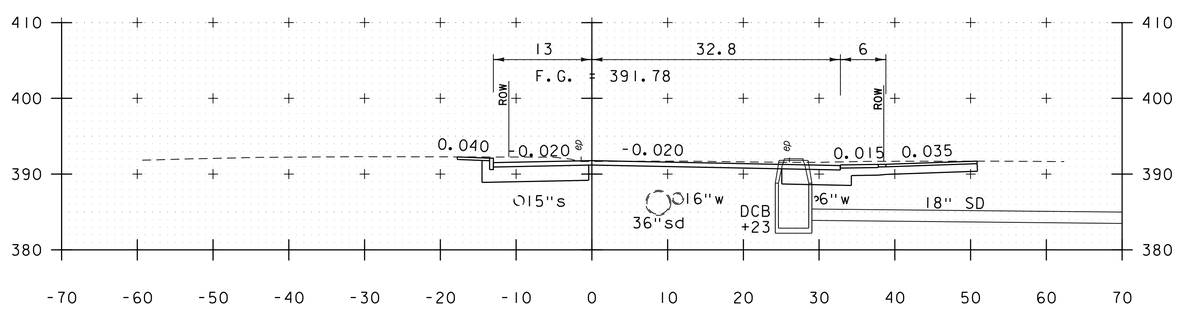

804+13

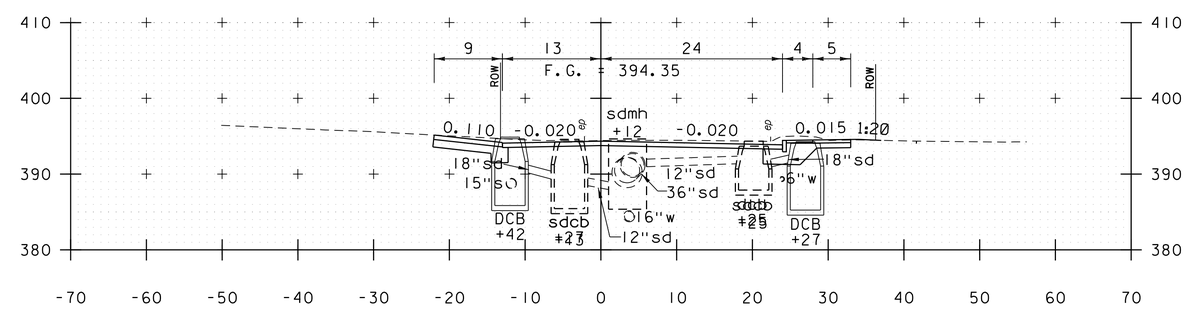

805+00

LOWER NEWTON ROAD

PROJECT NAME: ST. ALBANS	
PROJECT NUMBER: HPP 8000(17)	
FILE NAME: 57414_XS_LowerNewton.dgn	PLOT DATE: 3/4/2016
PROJECT LEADER: J.D. SALADINO	DRAWN BY: O.M. DARISSE
DESIGNED BY: D.M. PECK	CHECKED BY: M.J. SERVETAS
LOWER NEWTON ROAD CROSS SECTIONS	SHEET 202 OF 230

vhb

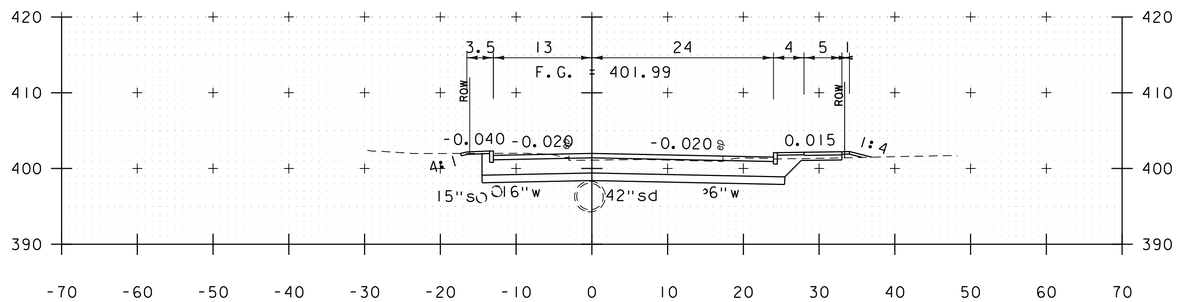

806+50

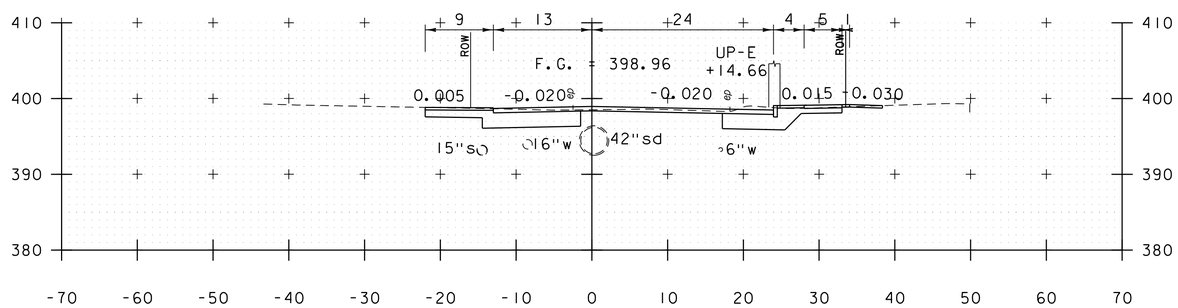

806+00

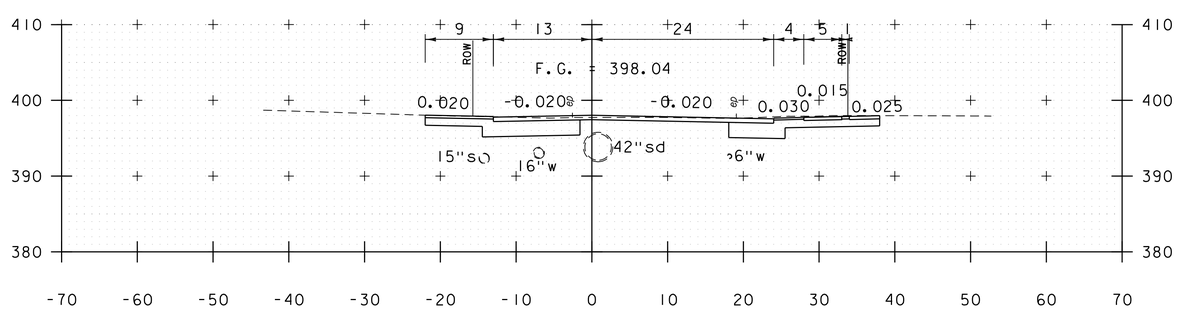

805+83

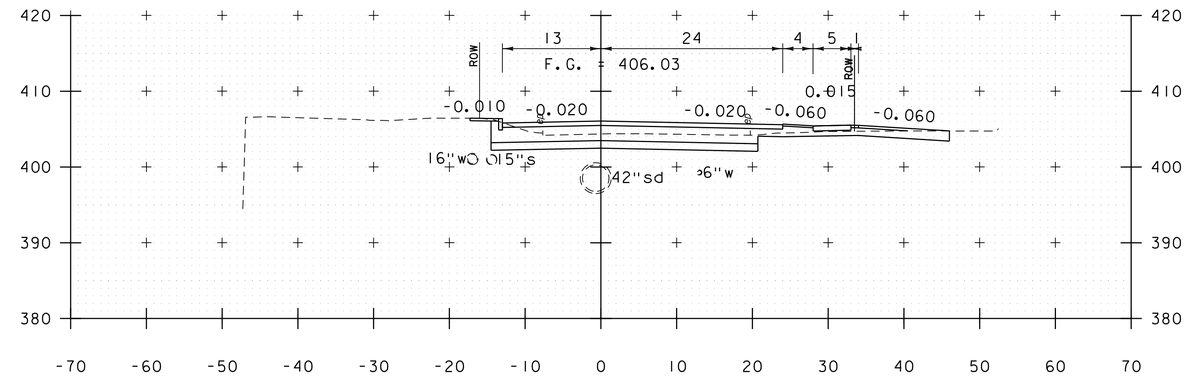

807+07

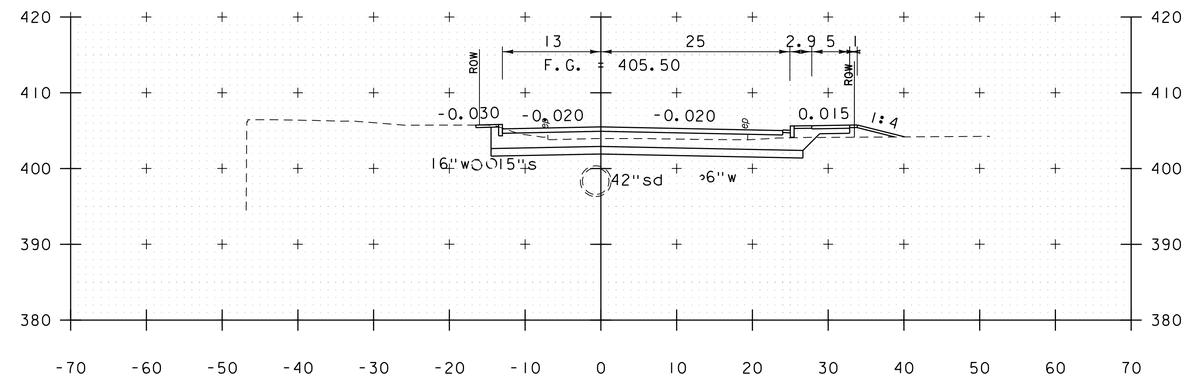

807+00

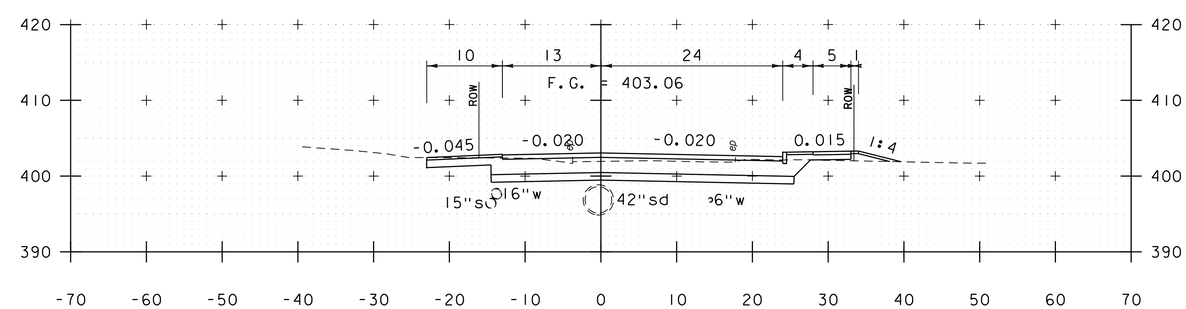

806+66

LOWER NEWTON ROAD

PROJECT NAME: ST. ALBANS	
PROJECT NUMBER: HPP 8000(17)	
FILE NAME: 57414_XS_LowerNewton.dgn	PLOT DATE: 3/4/2016
PROJECT LEADER: J.D. SALADINO	DRAWN BY: O.M. DARISSE
DESIGNED BY: D.M. PECK	CHECKED BY: M.J. SERVETAS
LOWER NEWTON ROAD CROSS SECTIONS	SHEET 203 OF 230

VHB 57414.00

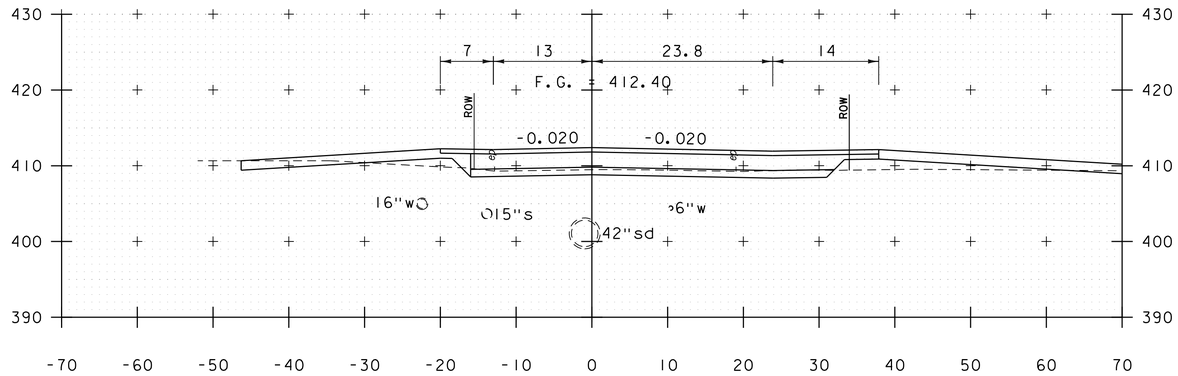

807+83

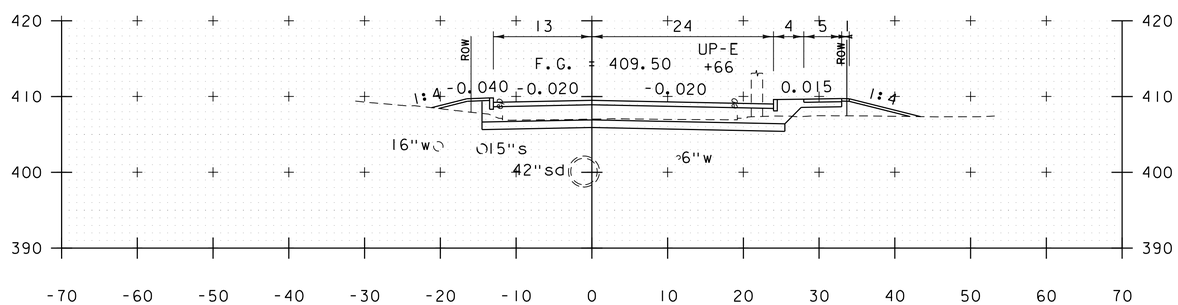

807+50

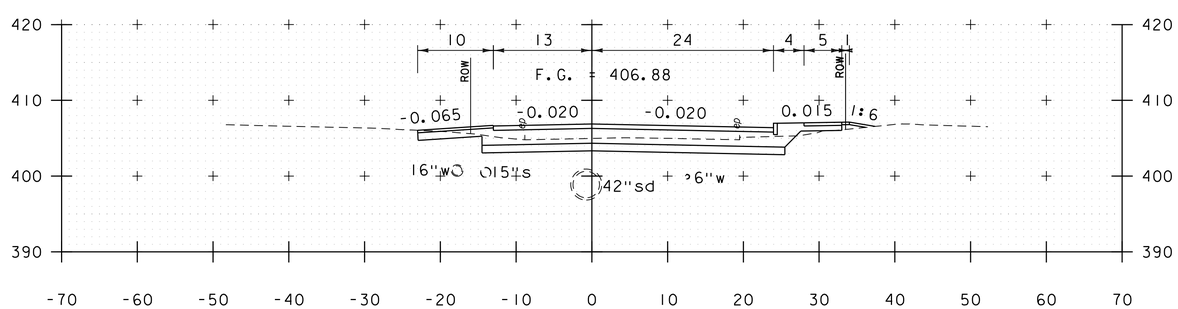

807+18

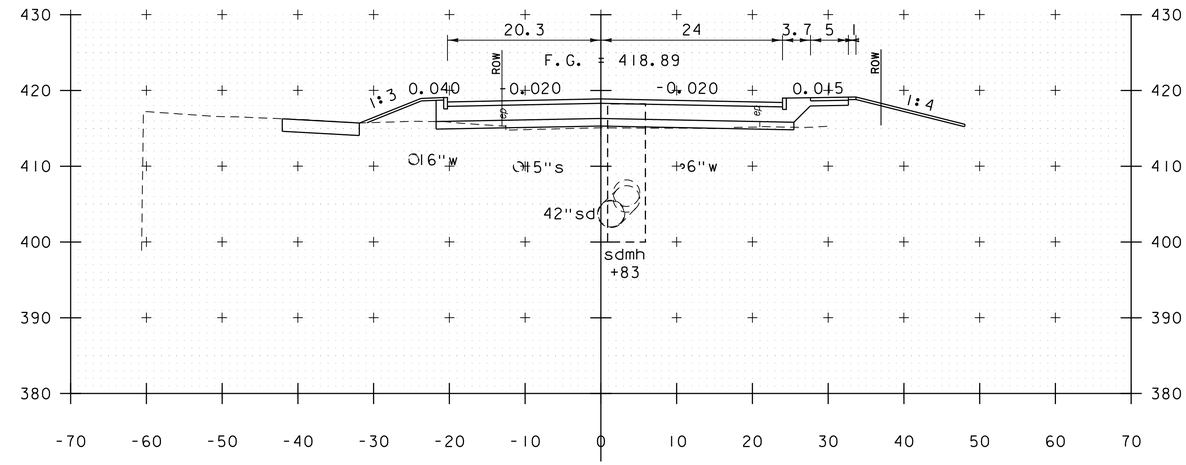

808+50

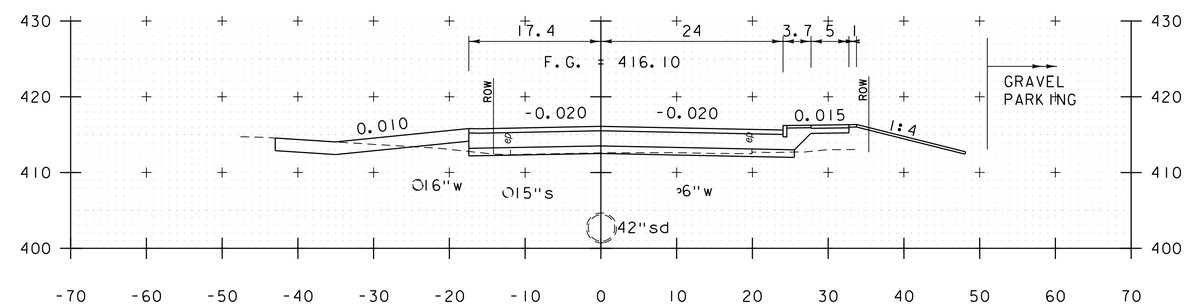

808+22

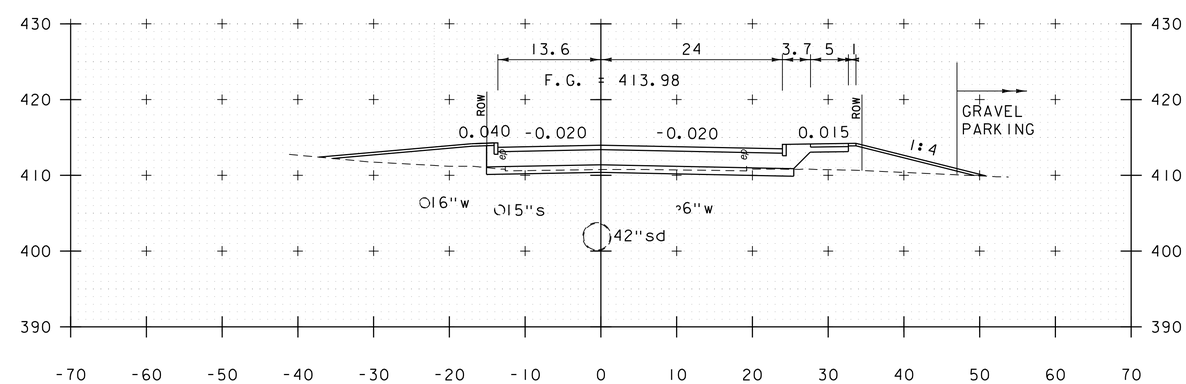

808+00

LOWER NEWTON ROAD

PROJECT NAME:	ST. ALBANS
PROJECT NUMBER:	HPP 8000(17)

FILE NAME: 57414_XS_LowerNewton.dgn	PLOT DATE: 3/4/2016
PROJECT LEADER: J.D. SALADINO	DRAWN BY: O.M. DARISSE
DESIGNED BY: D.M. PECK	CHECKED BY: M.J. SERVETAS
LOWER NEWTON ROAD CROSS SECTIONS	SHEET 204 OF 230

VHB 57414.00

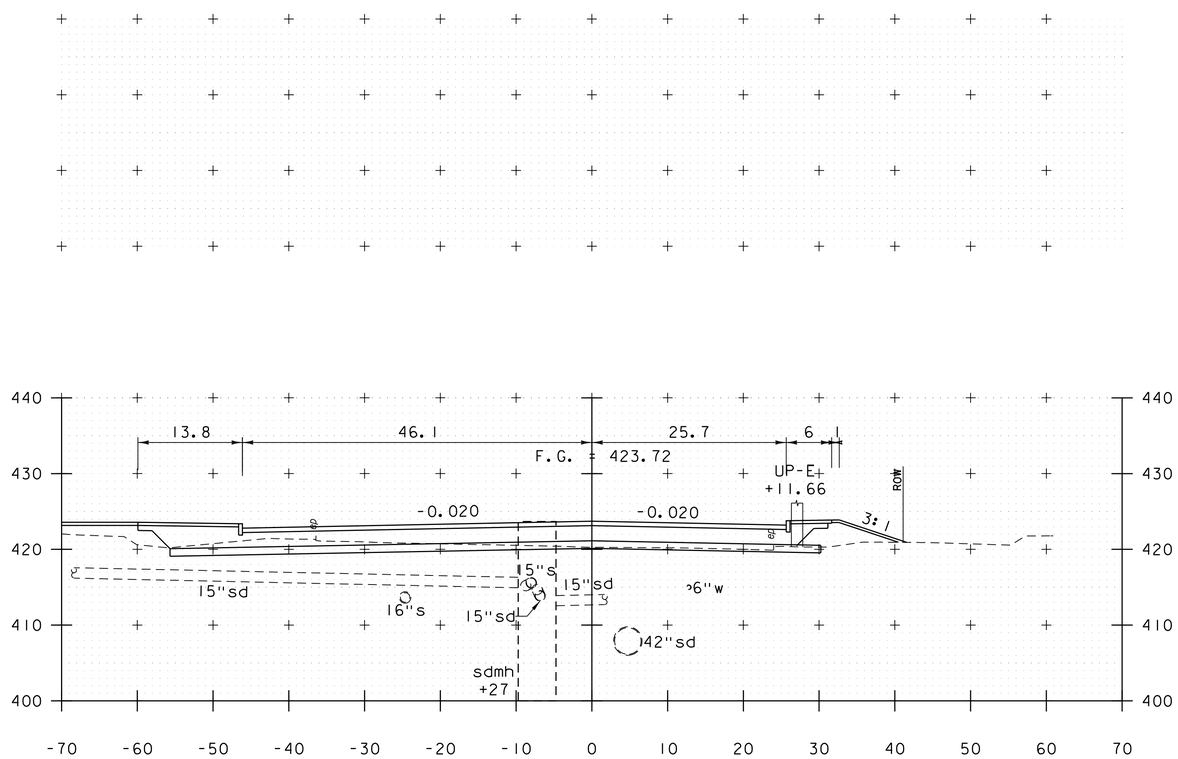

809+00

LOWER NEWTON ROAD

PROJECT NAME: ST. ALBANS	
PROJECT NUMBER: HPP 8000(17)	
FILE NAME: 57414_XS_LowerNewton.dgn	PLOT DATE: 3/4/2016
PROJECT LEADER: J.D. SALADINO	DRAWN BY: O.M. DARISSE
DESIGNED BY: D.M. PECK	CHECKED BY: M.J. SERVETAS
LOWER NEWTON ROAD CROSS SECTIONS	SHEET 205 OF 230

vhb

STA. 899+45, LT
BEGIN 30:1 LANE TAPER

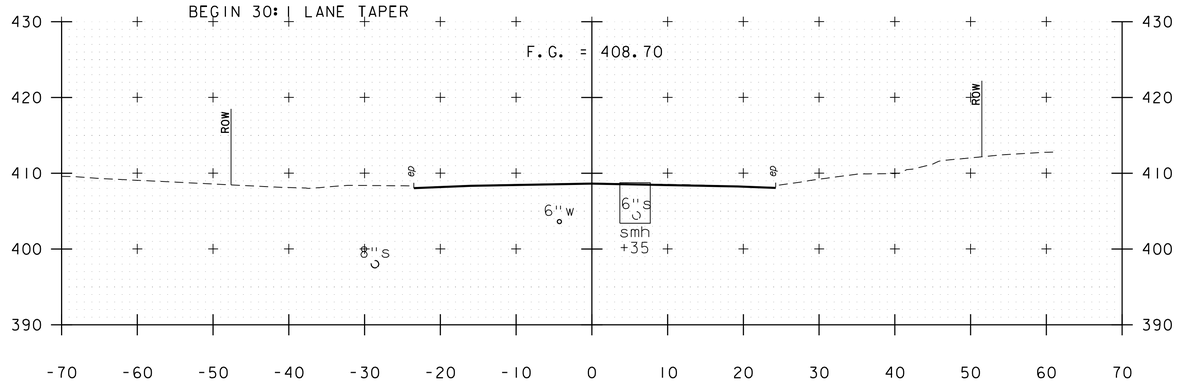

STATION 899+00
BEGIN APPROACH

899+00

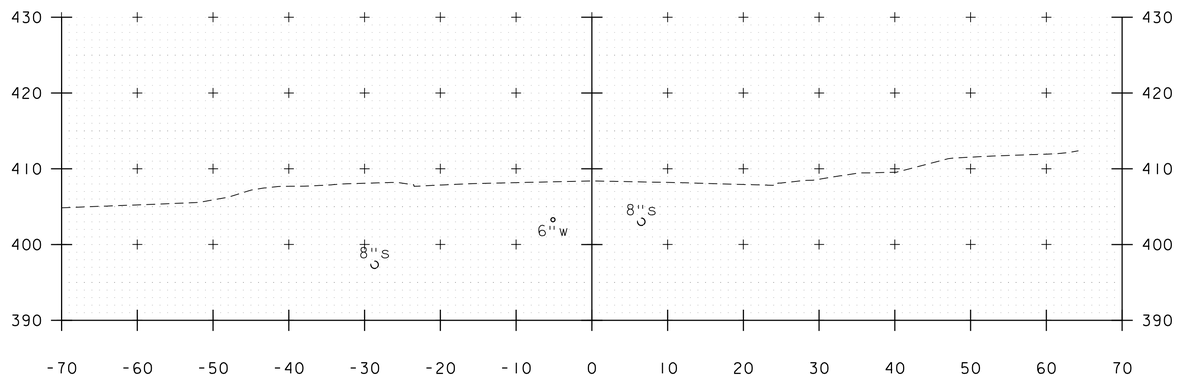

898+50

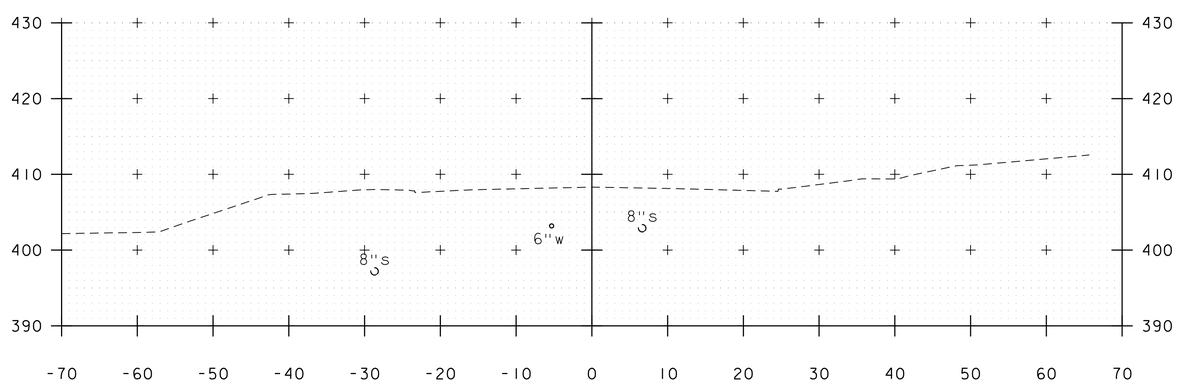

898+39

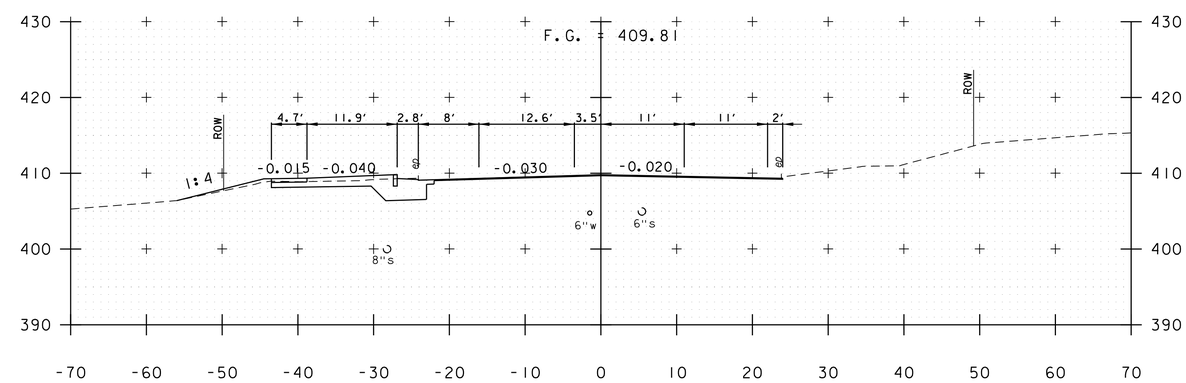

900+50

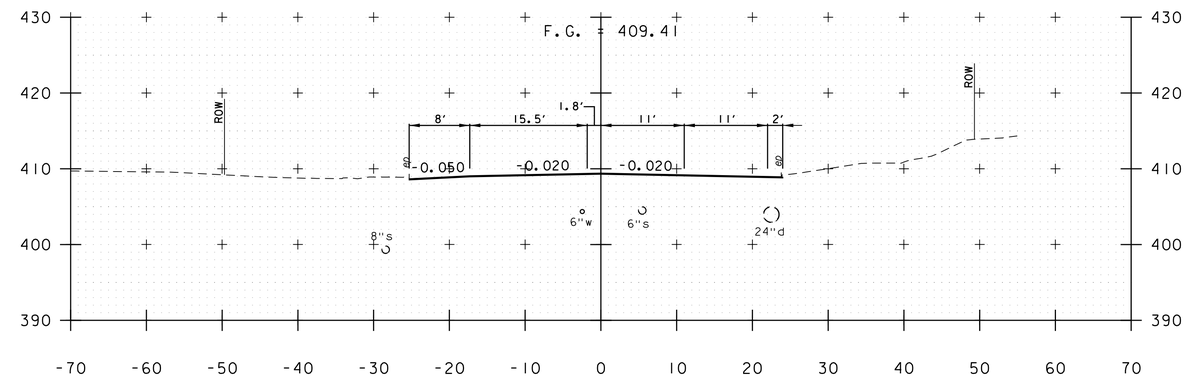

900+00

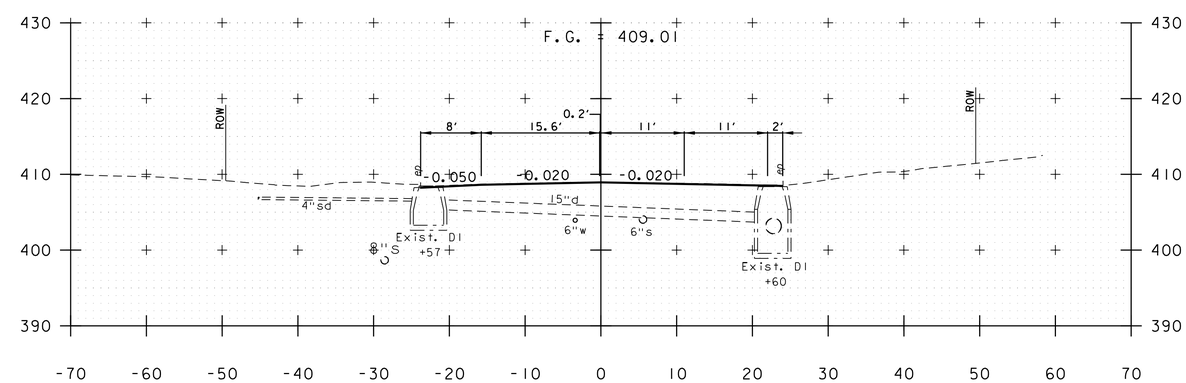

899+50

S. MAIN STREET (SHEET 1 OF 3)

PROJECT NAME: ST. ALBANS	
PROJECT NUMBER: HPP 8000(17)	
FILE NAME: 57414_XS_SouthMain.dgn	PLOT DATE: 3/4/2016
PROJECT LEADER: M.A. COLGAN	DRAWN BY: K.C. BARRY
DESIGNED BY: D.M. PECK	CHECKED BY: M.J. SERVETAS
CROSS SECTIONS	SHEET 206 OF 230

VHB 57414.00

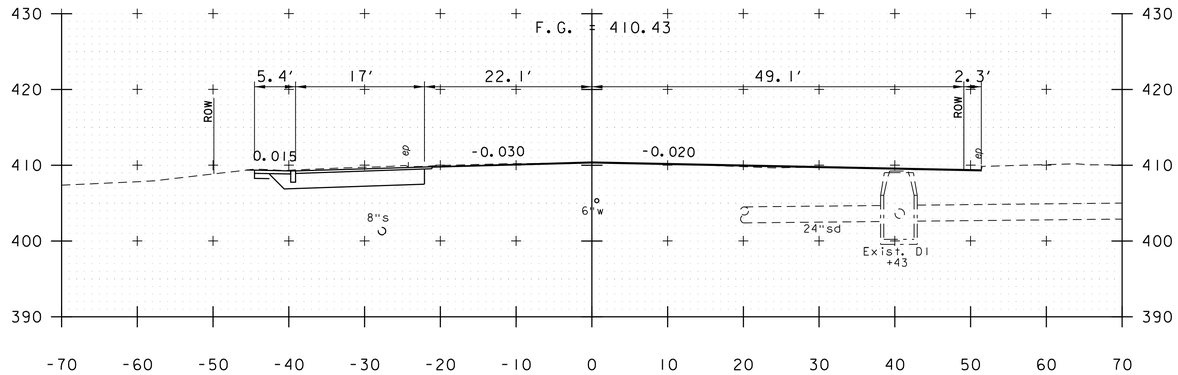

STA. 901+25, LT
END 30:1 LANE TAPER

901+50

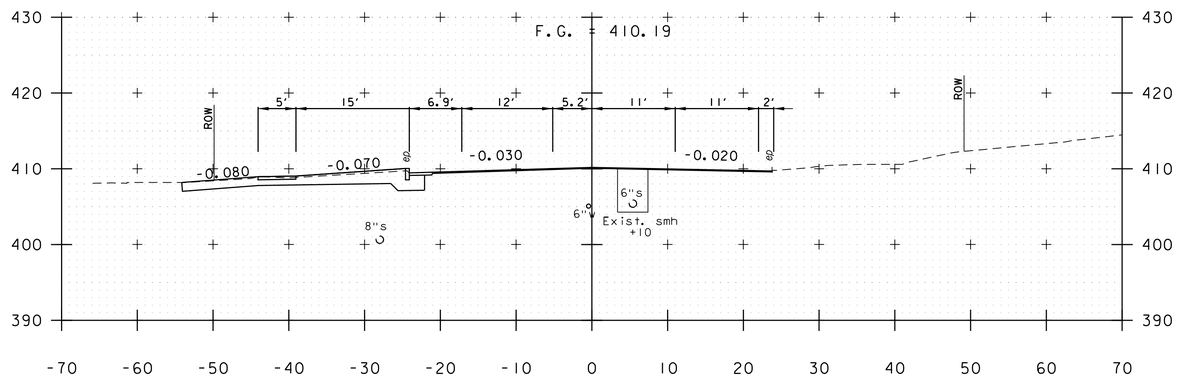

901+00

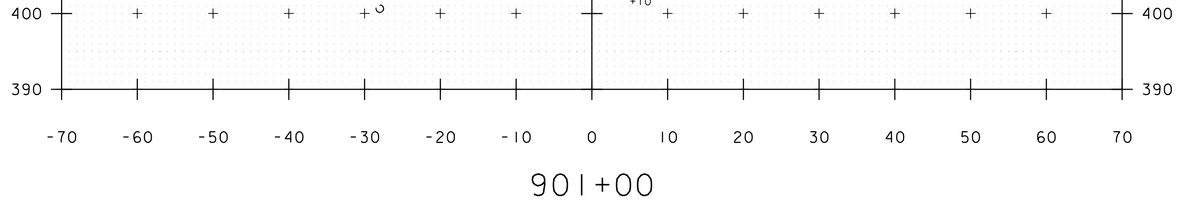

900+61

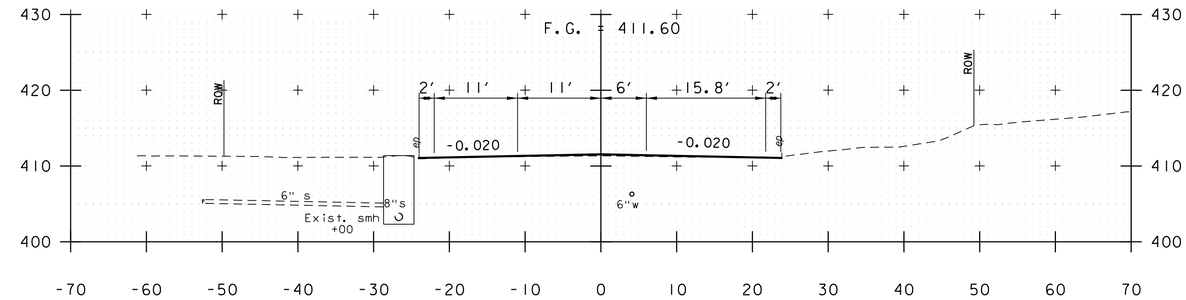

903+00

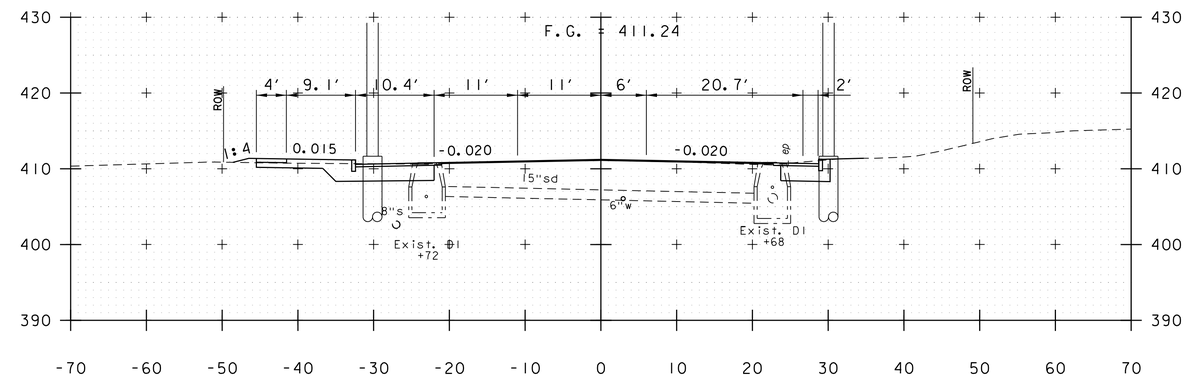

902+50

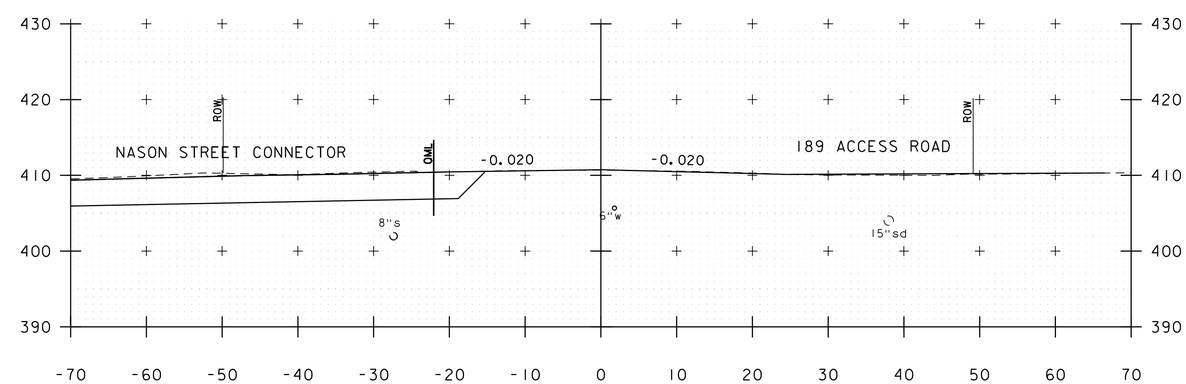

SEE NASON STREET CONNECTOR
CROSS SECTIONS

902+00

S. MAIN STREET (SHEET 2 OF 3)

PROJECT NAME: ST. ALBANS	
PROJECT NUMBER: HPP 8000(17)	
FILE NAME: 57414_XS_SouthMain.dgn	PLOT DATE: 3/4/2016
PROJECT LEADER: M.A. COLGAN	DRAWN BY: K.C. BARRY
DESIGNED BY: D.M. PECK	CHECKED BY: M.J. SERVETAS
CROSS SECTIONS	SHEET 207 OF 230

VHB 57414.00

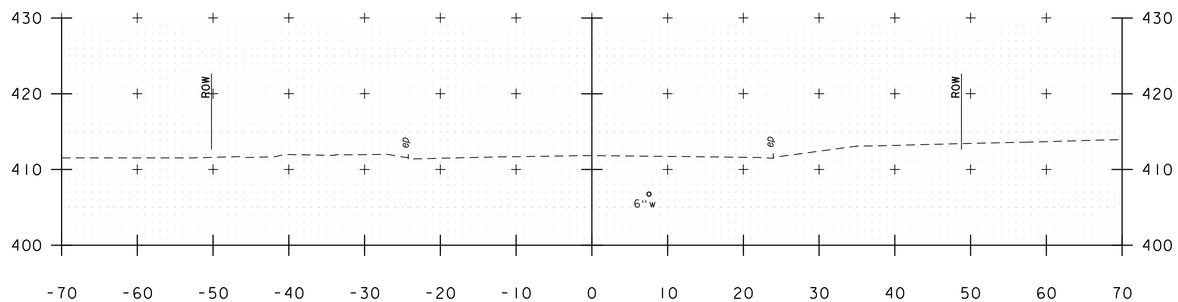

904+50

STATION 904+25
END APPROACH

STA. 904+19, RT
END 10:1 LANE TAPER

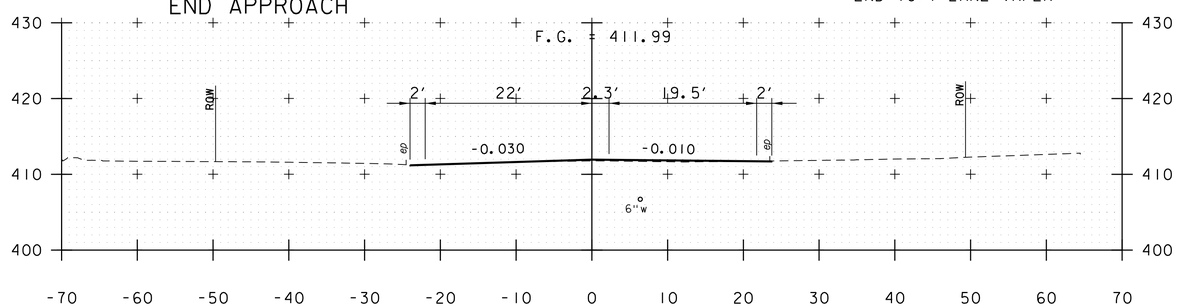

904+00

STA. 903+62, RT
BEGIN 10:1 LANE TAPER

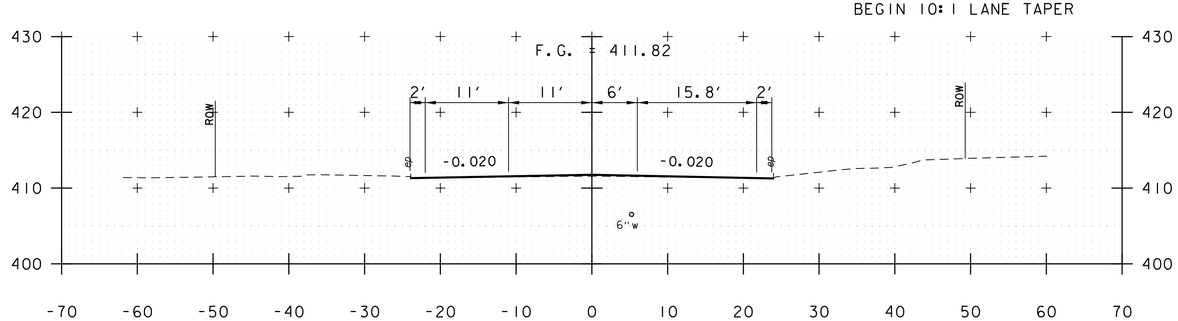

903+50

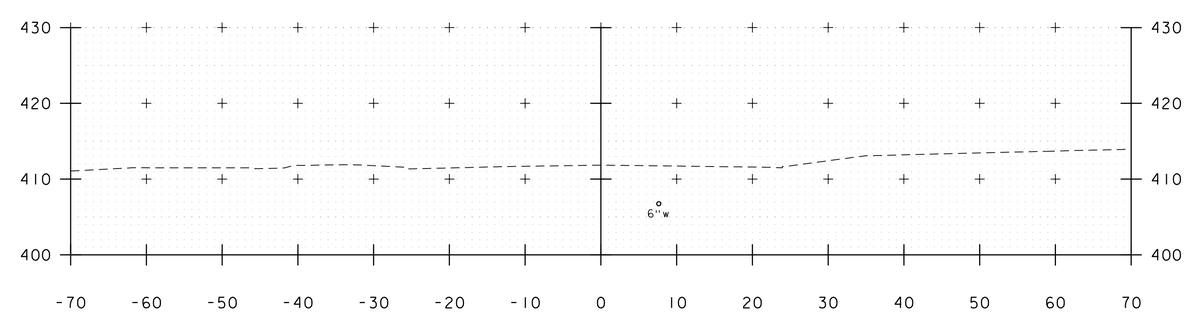

904+54

S. MAIN STREET (SHEET 3 OF 3)

PROJECT NAME: ST. ALBANS	
PROJECT NUMBER: HPP 8000(17)	
FILE NAME: 57414_XS_SouthMain.dgn	PLOT DATE: 3/4/2016
PROJECT LEADER: M.A. COLGAN	DRAWN BY: K.C. BARRY
DESIGNED BY: D.M. PECK	CHECKED BY: M.J. SERVETAS
CROSS SECTIONS	SHEET 208 OF 230

VHB 57414.00

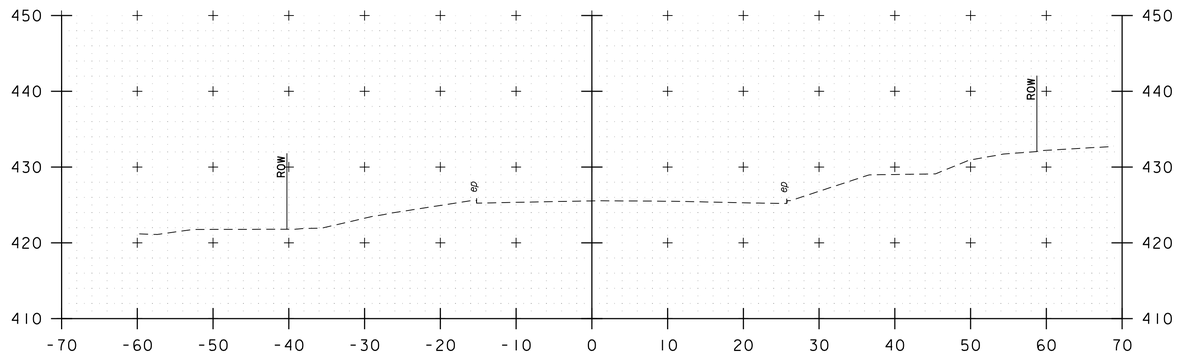

1001+50

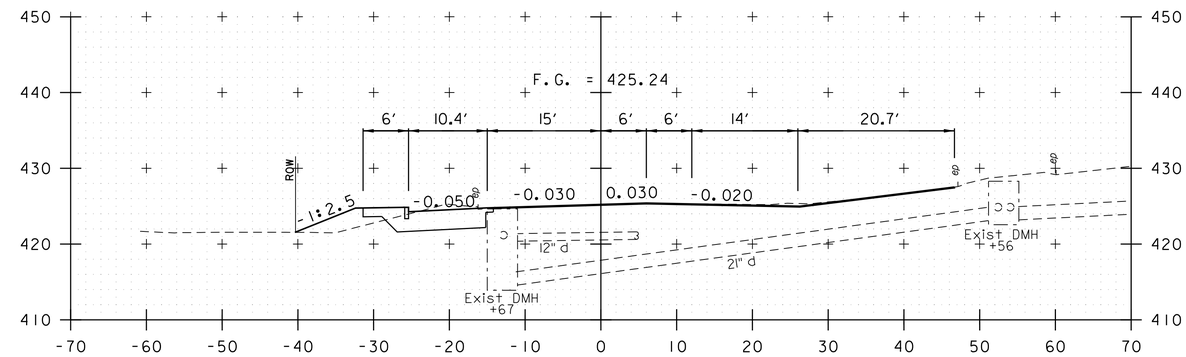

1002+50

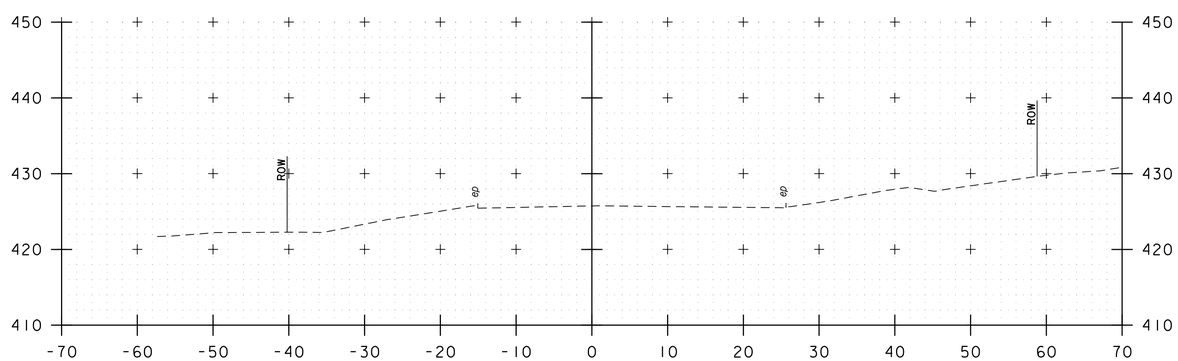

1001+00

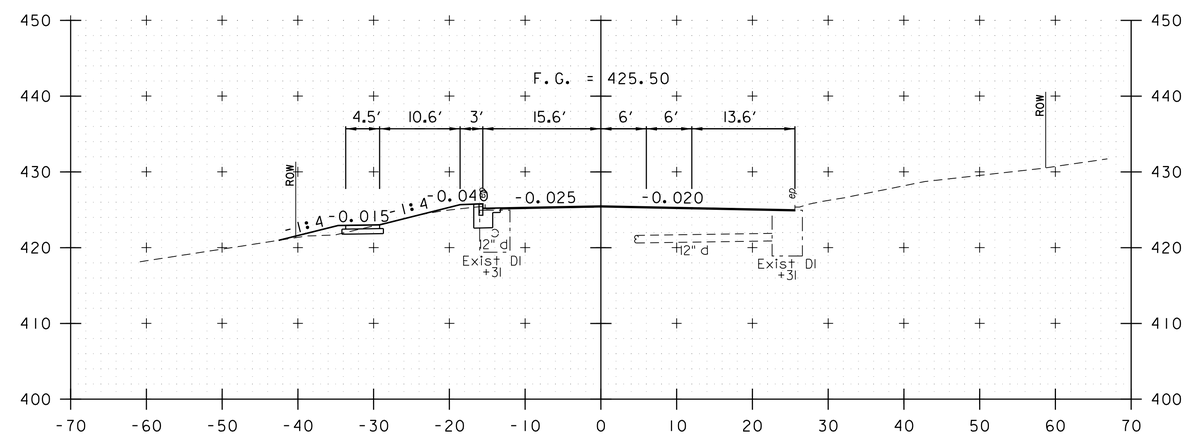

1002+00

STATION 1001+80
BEGIN APPROACH

NORTH MAIN STREET (US 7)

PROJECT NAME: ST. ALBANS	
PROJECT NUMBER: HPP 8000(17)	
FILE NAME: 57414_XS.dgn	PLOT DATE: 3/4/2016
PROJECT LEADER: J. D. SALADINO	DRAWN BY: DMP / WAD
DESIGNED BY: D.M. PECK	CHECKED BY: M.J. SERVETAS
CROSS SECTIONS	SHEET 209 OF 230

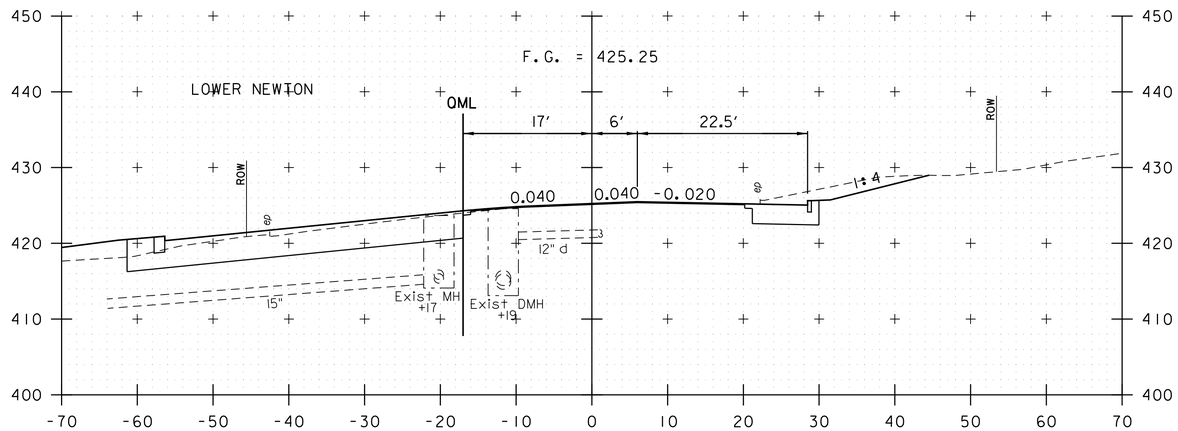

1003+50

STATION 1004+65
END APPROACH

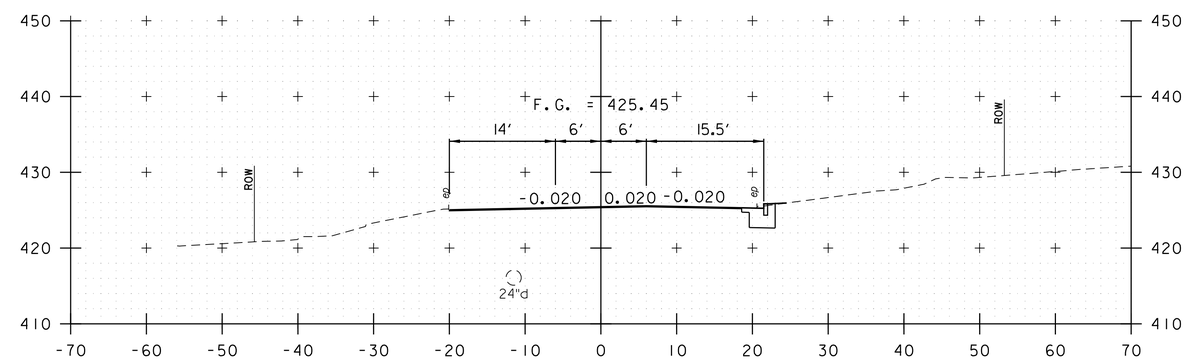

1004+50

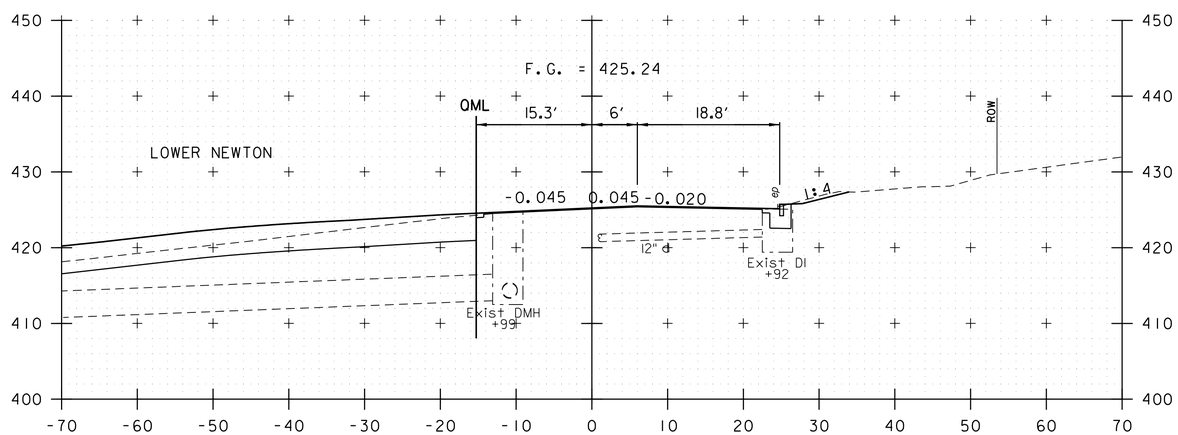

1003+00

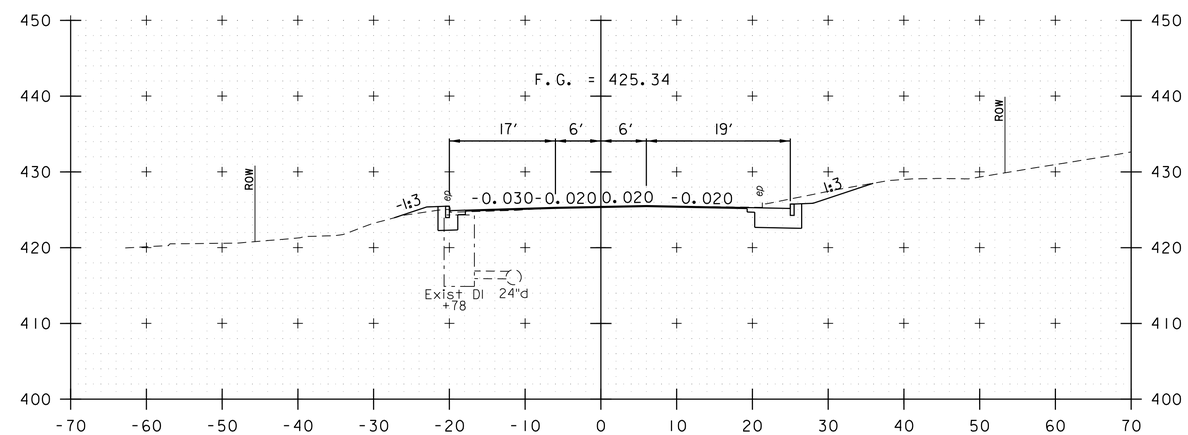

1004+00

NORTH MAIN STREET (US 7)

PROJECT NAME: ST. ALBANS	
PROJECT NUMBER: HPP 8000(17)	
FILE NAME: 57414_XS.dgn	PLOT DATE: 3/4/2016
PROJECT LEADER: J. D. SALADINO	DRAWN BY: DMP / WAD
DESIGNED BY: D.M. PECK	CHECKED BY: M.J. SERVETAS
CROSS SECTIONS	SHEET 210 OF 230

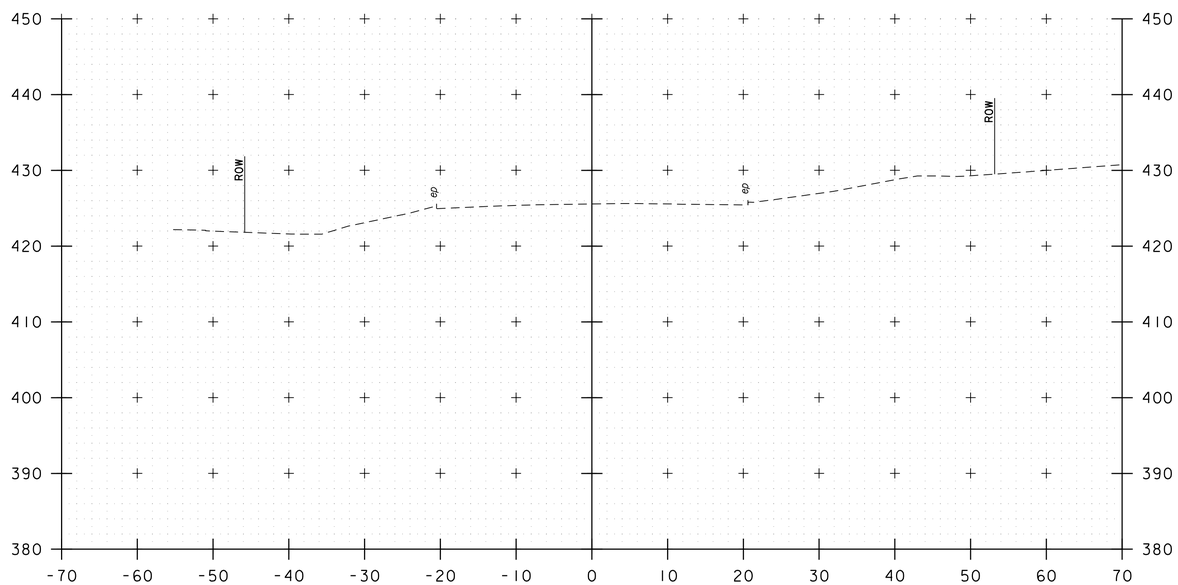

1005+00

NORTH MAIN STREET (US 7)

PROJECT NAME: ST. ALBANS	
PROJECT NUMBER: HPP 8000(17)	
FILE NAME: 57414_XS.dgn	PLOT DATE: 3/4/2016
PROJECT LEADER: J. D. SALADINO	DRAWN BY: DMP / WAD
DESIGNED BY: D.M. PECK	CHECKED BY: M.J. SERVETAS
CROSS SECTIONS	SHEET 211 OF 230

VHB 57414.00

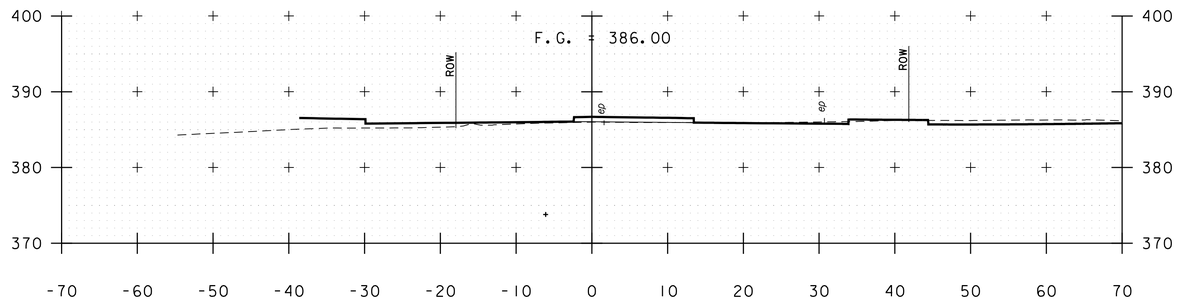

2003+00

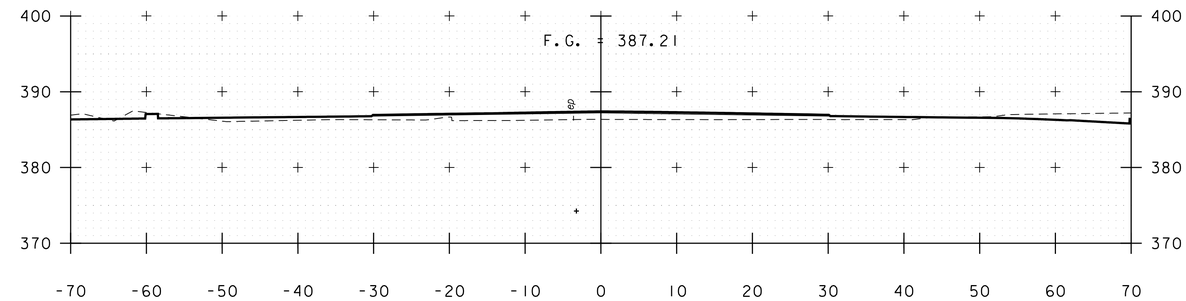

2003+75

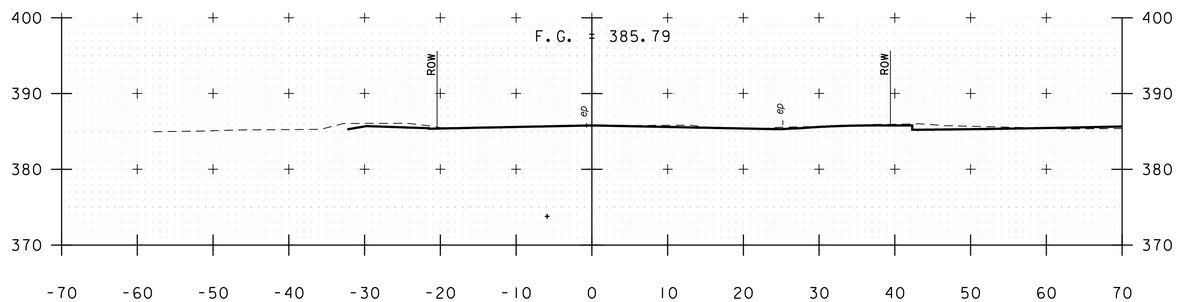

2002+75

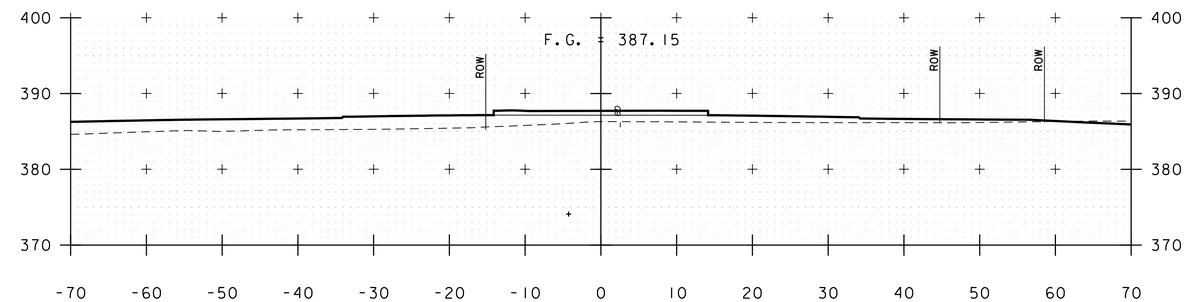

2003+50

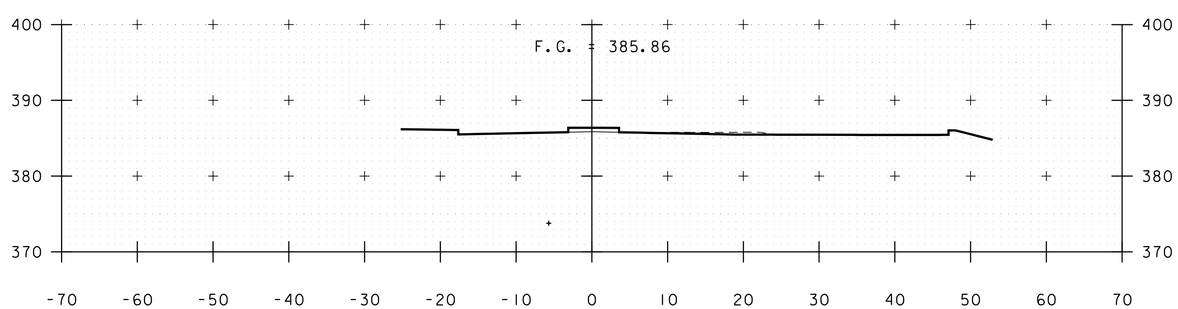

2002+50

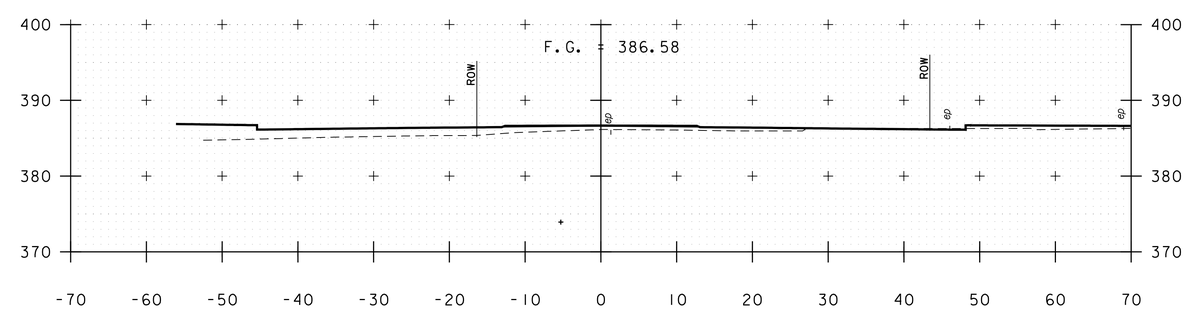

2003+25

LOWER WELDEN STREET

PROJECT NAME: ST. ALBANS	
PROJECT NUMBER: HPP 8000(17)	
FILE NAME: 57414_XS_LowerWelden.dgn	PLOT DATE: 3/4/2016
PROJECT LEADER: M.A. COLGAN	DRAWN BY: D.M. PECK
DESIGNED BY: D.M. PECK	CHECKED BY: ------
CROSS SECTIONS	SHEET 212 OF 230

VHB 57414.00

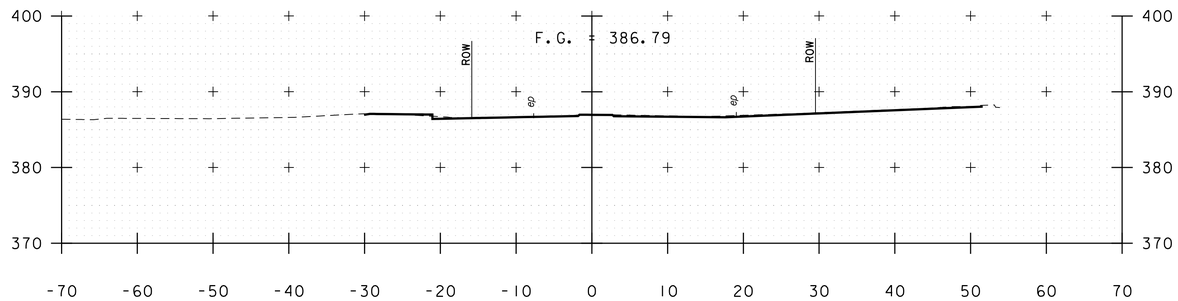

2004+50

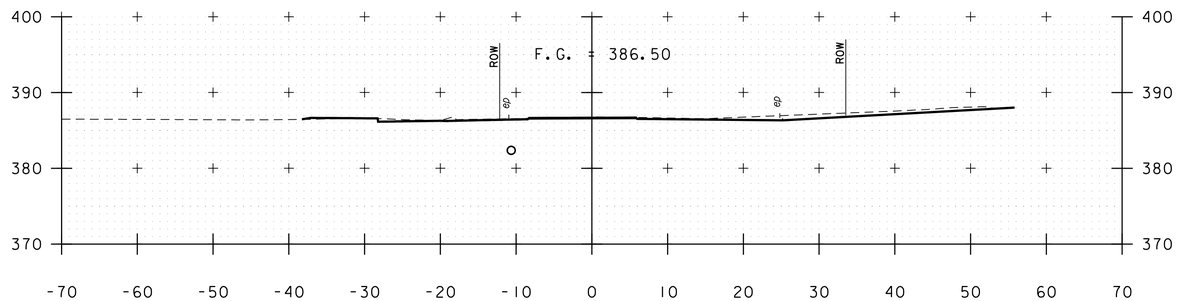

2004+25

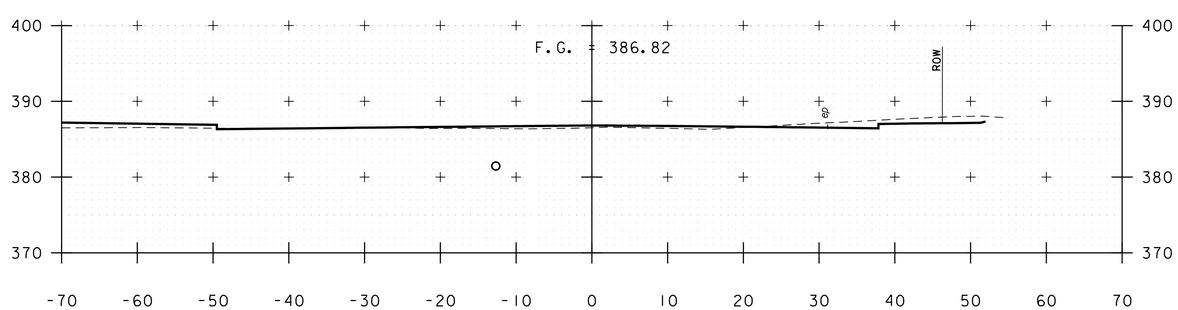

2004+00

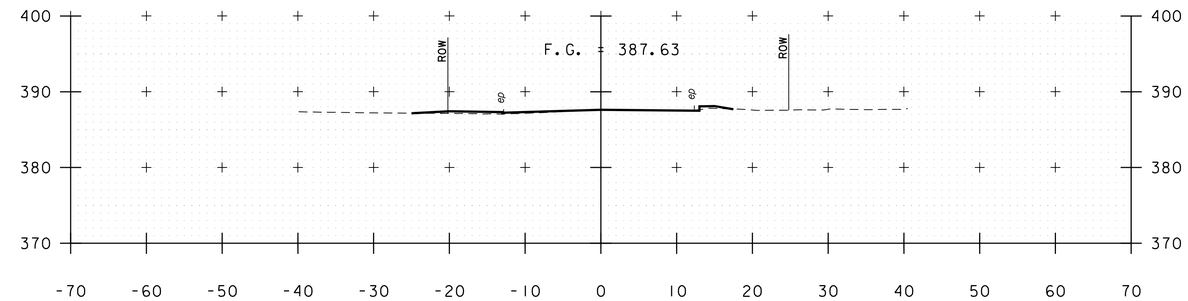

2005+25

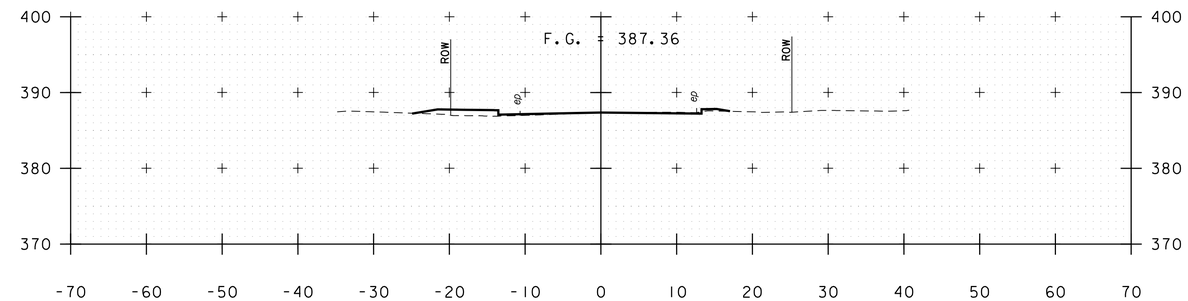

2005+00

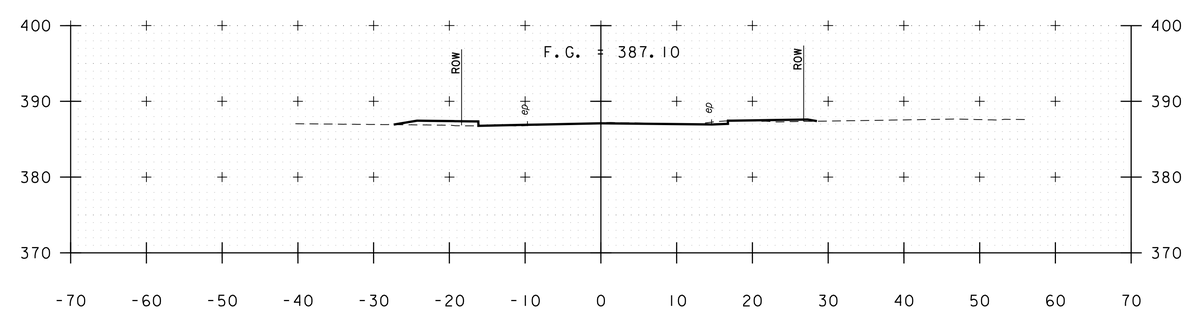

2004+75

LOWER WELDEN STREET

PROJECT NAME: ST. ALBANS	
PROJECT NUMBER: HPP 8000(17)	
FILE NAME: 57414_XS_LowerWelden.dgn	PLOT DATE: 3/4/2016
PROJECT LEADER: M.A. COLGAN	DRAWN BY: D.M. PECK
DESIGNED BY: D.M. PECK	CHECKED BY: ------
CROSS SECTIONS	SHEET 213 OF 230

VHB 57414.00

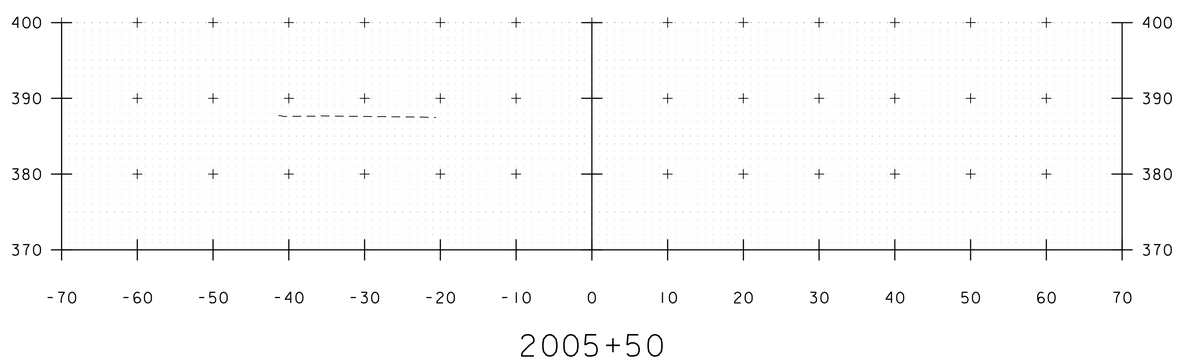

LOWER WELDEN STREET

PROJECT NAME: ST. ALBANS	
PROJECT NUMBER: HPP 8000(17)	
FILE NAME: 57414_XS_LowerWelden.dgn	PLOT DATE: 3/4/2016
PROJECT LEADER: M.A. COLGAN	DRAWN BY: D.M. PECK
DESIGNED BY: D.M. PECK	CHECKED BY: ------
CROSS SECTIONS	SHEET 214 OF 230

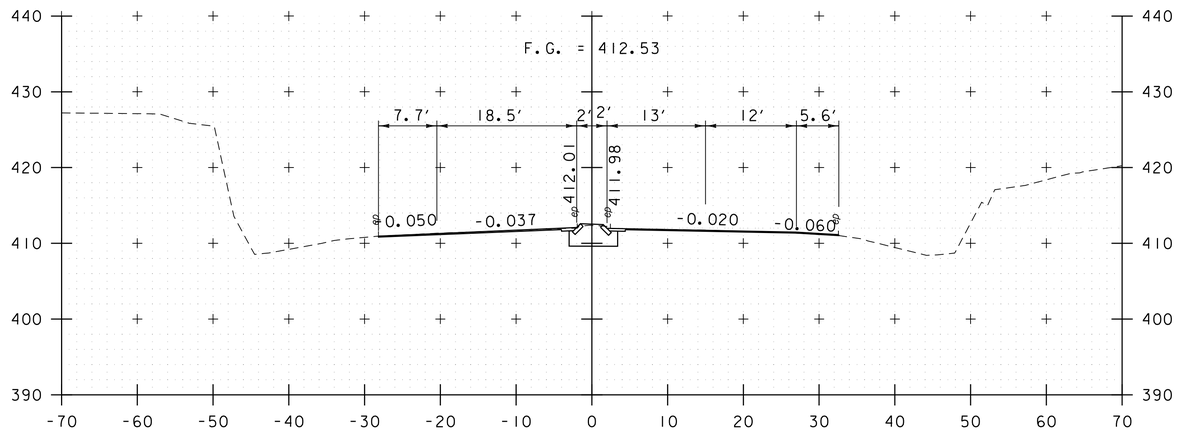

STATION 3000+50
BEGIN APPROACH

3000+50

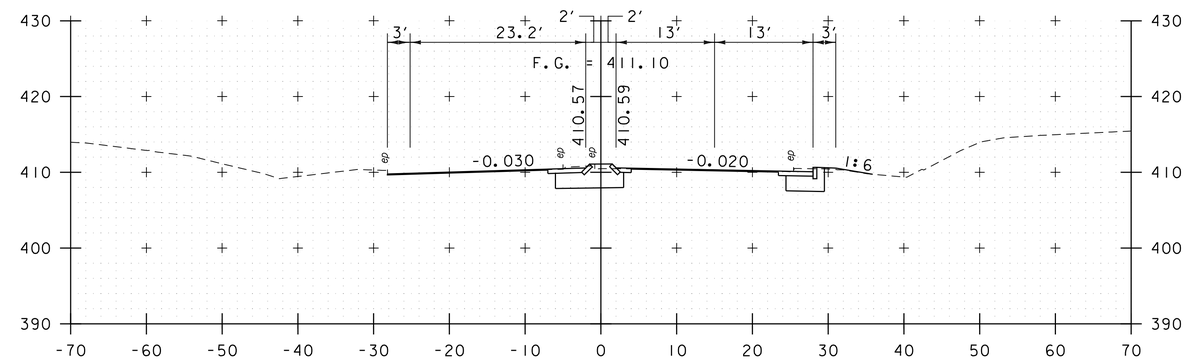

3001+50

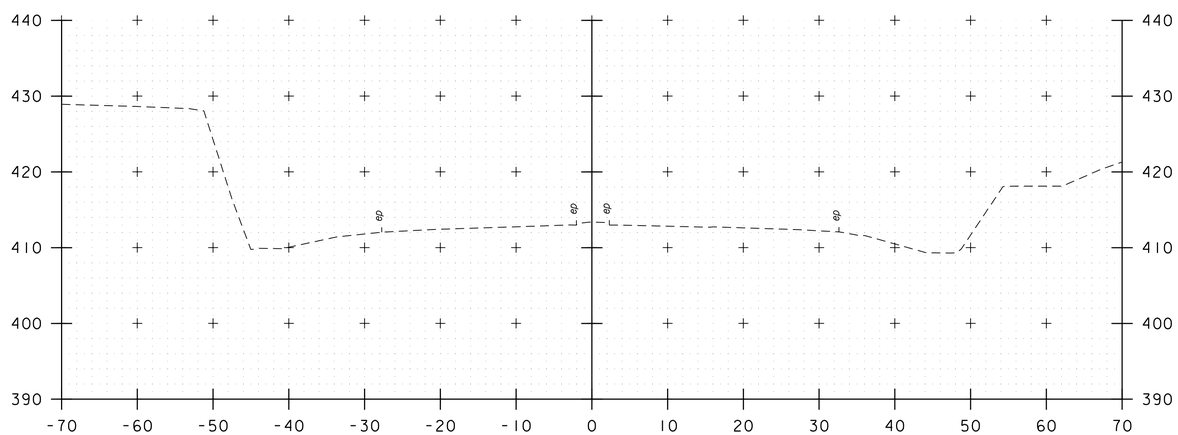

3000+00

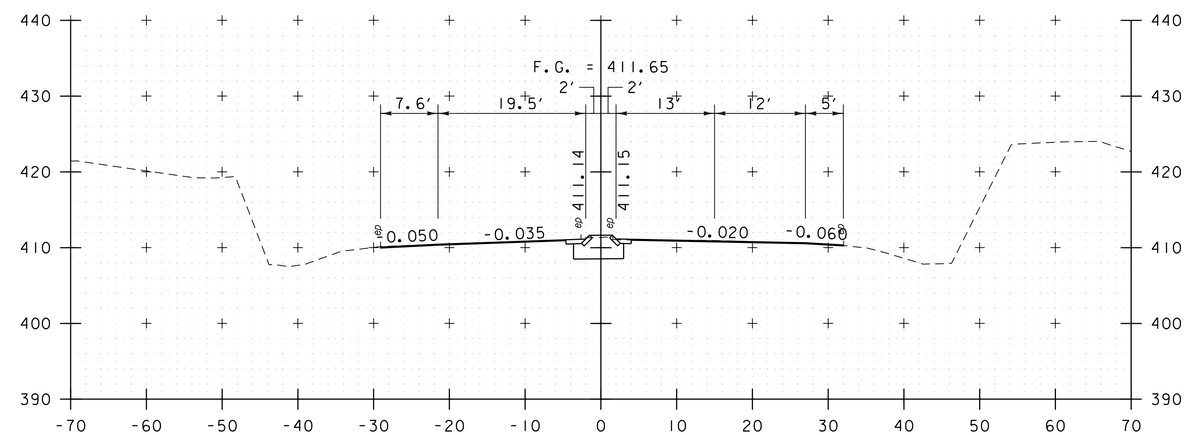

3001+00

I-89 ACCESS ROAD

PROJECT NAME: ST. ALBANS	
PROJECT NUMBER: HPP 8000(17)	
FILE NAME: 57414_XS_I89Access.dgn	PLOT DATE: 3/4/2016
PROJECT LEADER: J. D. SALADINO	DRAWN BY: DMP / WAD
DESIGNED BY: D.M. PECK	CHECKED BY: M.J. SERVETAS
CROSS SECTIONS	SHEET 215 OF 230

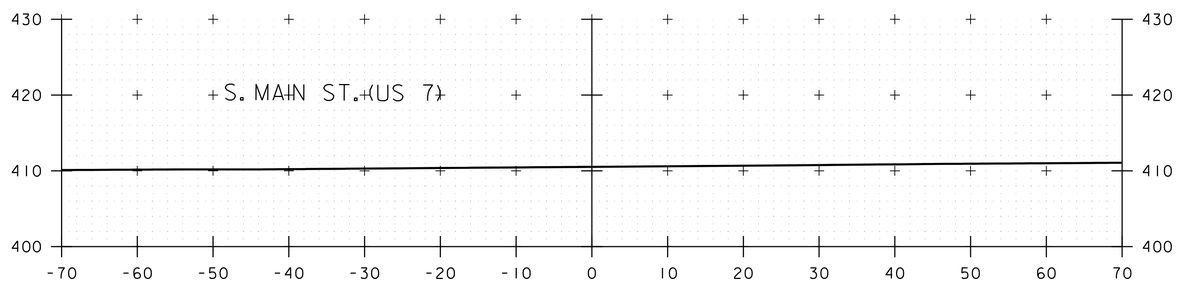

3002+19

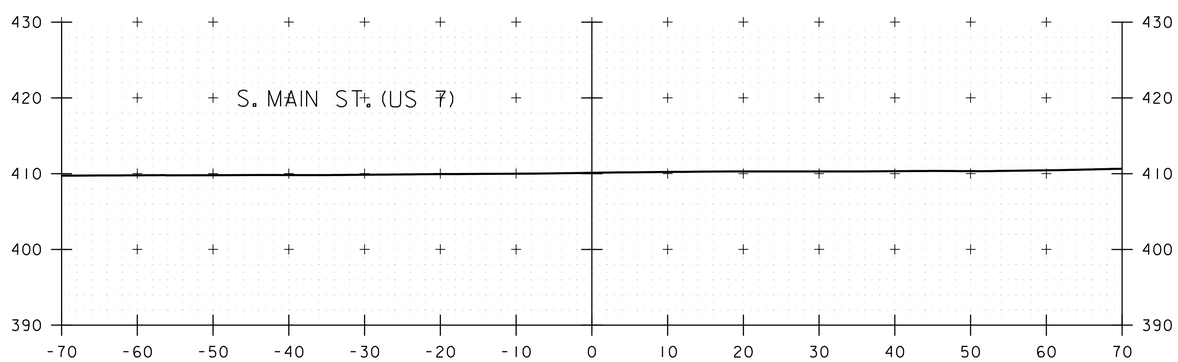

3002+00

I-89 ACCESS ROAD

PROJECT NAME: ST. ALBANS	
PROJECT NUMBER: HPP 8000(17)	
FILE NAME: 57414_XS_189Access.dgn	PLOT DATE: 3/4/2016
PROJECT LEADER: J. D. SALADINO	DRAWN BY: DMP / WAD
DESIGNED BY: D.M. PECK	CHECKED BY: M.J. SERVETAS
CROSS SECTIONS	SHEET 216 OF 230

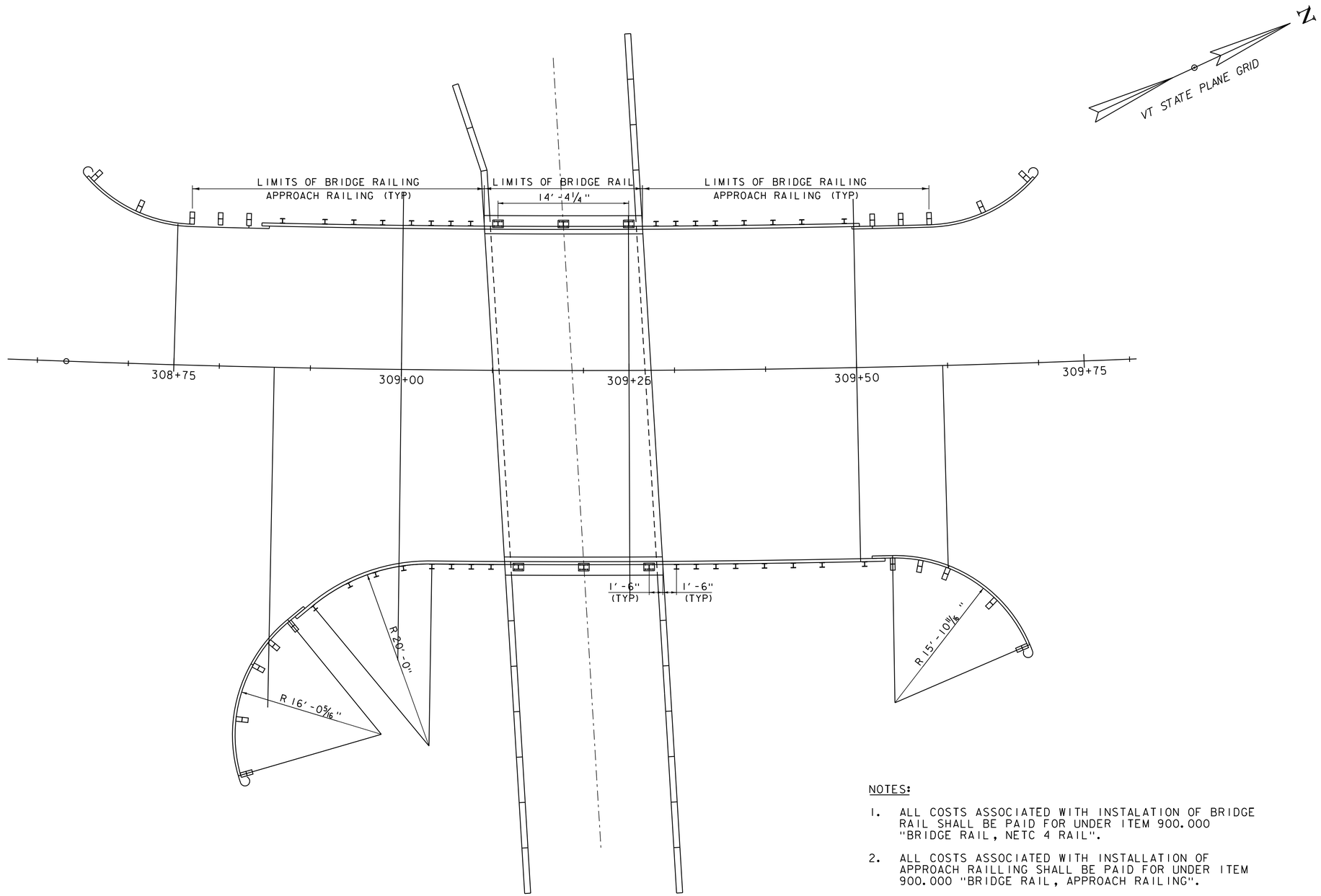

BRIDGE AND APPROACH RAIL

SCALE: 3/8" = 1'-0"

NOTES:

1. ALL COSTS ASSOCIATED WITH INSTALATION OF BRIDGE RAIL SHALL BE PAID FOR UNDER ITEM 900.000 "BRIDGE RAIL, NETC 4 RAIL".
2. ALL COSTS ASSOCIATED WITH INSTALLATION OF APPROACH RAILLING SHALL BE PAID FOR UNDER ITEM 900.000 "BRIDGE RAIL, APPROACH RAILING".
3. NOTE 3

PROJECT NAME: ST. ALBANS	
PROJECT NUMBER: HP 8000(17)	
FILE NAME: 57414_bdr_brail.dgn	PLOT DATE: 3/4/2016
PROJECT LEADER: M.A. COLGAN	DRAWN BY: C.J. HAKEY
DESIGNED BY: S.G. FARNSWORTH	CHECKED BY: ------
BRIDGE AND APPROACH RAIL	SHEET 217 OF 230

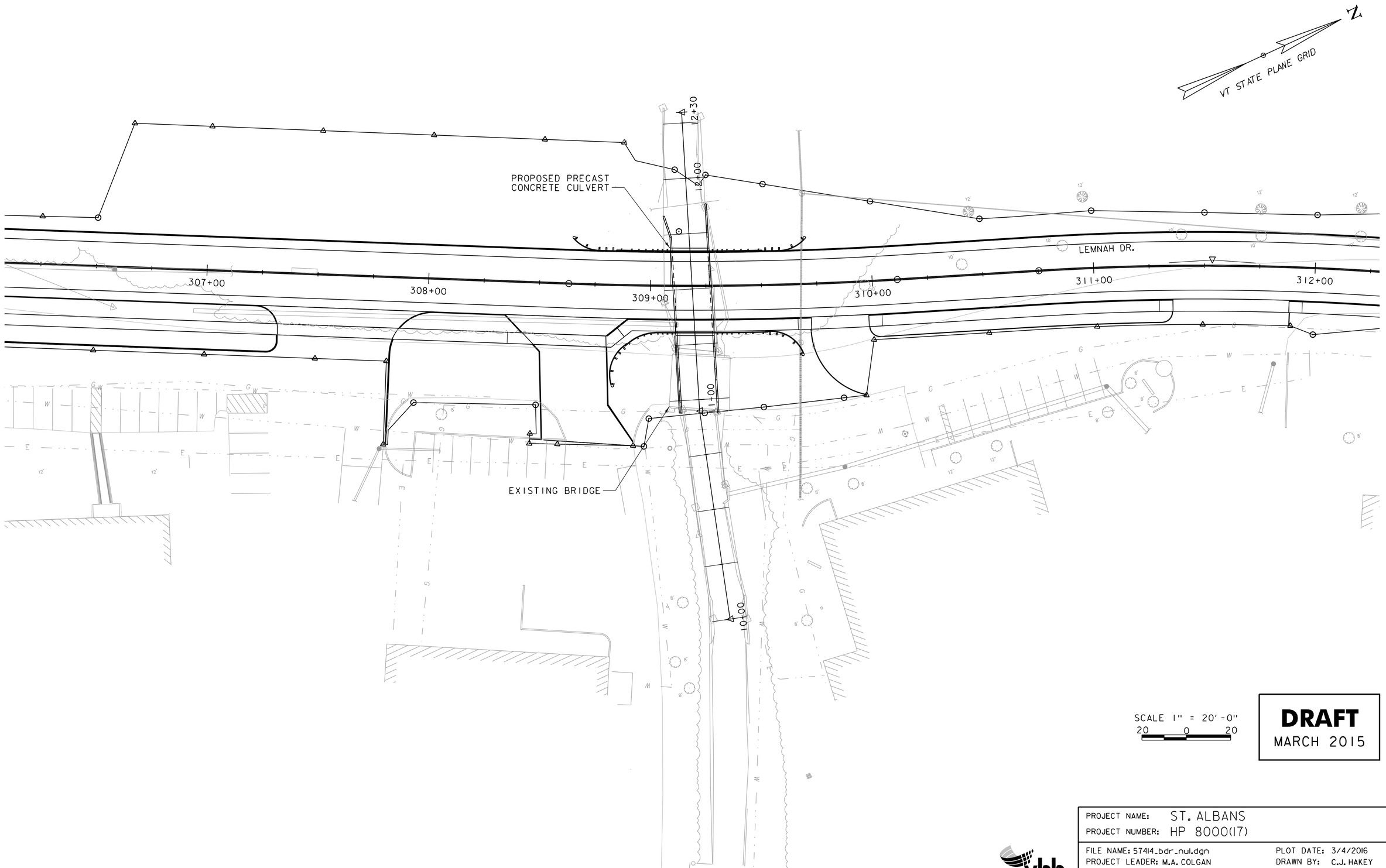

DRAFT
MARCH 2015

PROJECT NAME: ST. ALBANS	
PROJECT NUMBER: HP 8000(17)	
FILE NAME: 57414_bdr_nul.dgn	PLOT DATE: 3/4/2016
PROJECT LEADER: M.A. COLGAN	DRAWN BY: C.J. HAKEY
DESIGNED BY: S.G. FARNSWORTH	CHECKED BY: ------
PLAN LAYOUT	SHEET 218 OF 230

VHB 57414

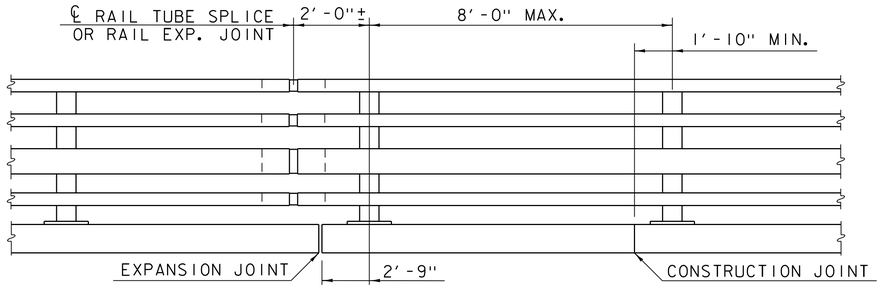

BRIDGE RAILING ELEVATION

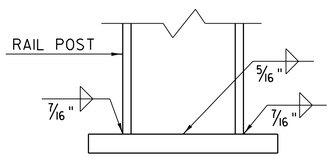

BASE WELD DETAIL

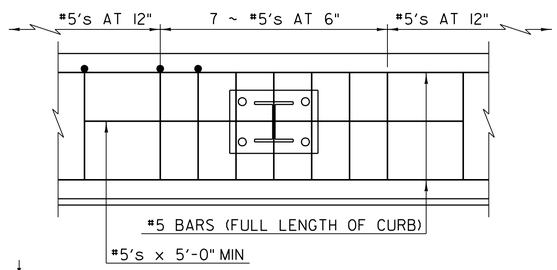

SIDEWALK REINFORCING PLAN

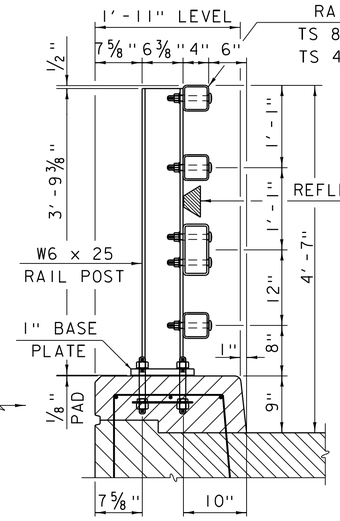

TYPICAL SECTION

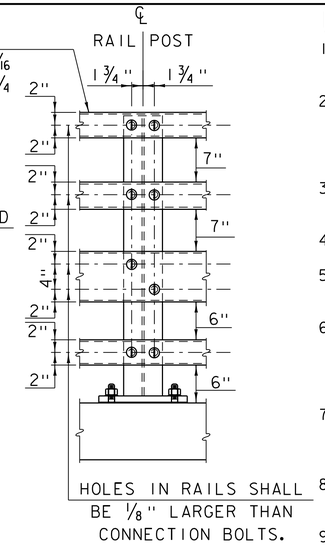

ELEVATION

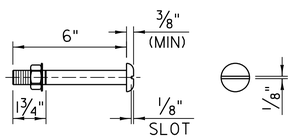

3/4" DIA M164 (TYPE I)
ROUND HEAD BOLT

(WITH WASHER AND PREVAILING TORQUE TYPE LOCK NUT)
(SEE NOTE #9)
ONLY FULL DIAMETER BODY BOLTS WILL BE ALLOWED.

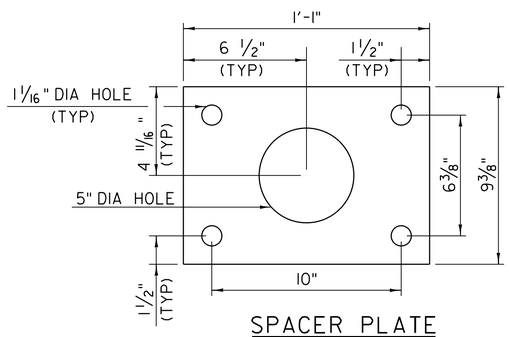

SPACER PLATE

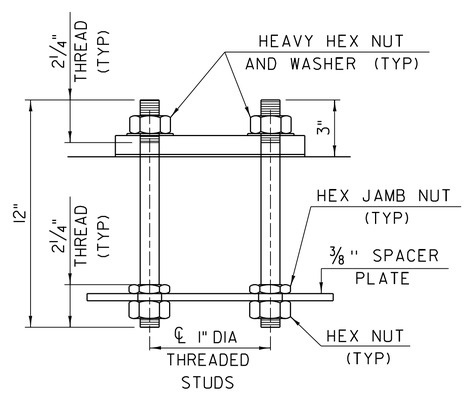

RAIL POST ANCHORAGE

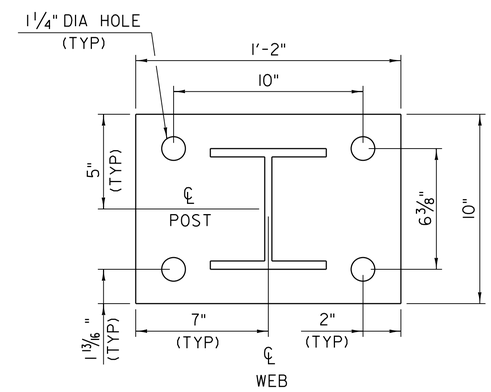

POST AND BASE PLATE

NOTES

1. ALL WORK AND MATERIALS SHALL CONFORM TO THE PROVISIONS OF SECTION 525 - RAILINGS OF THE STANDARD SPECIFICATION FOR CONSTRUCTION.
2. TUBING AND POSTS SHALL MEET THE REQUIREMENTS OF SECTION 732 - RAILING MATERIALS OF THE STANDARD SPECIFICATIONS FOR CONSTRUCTION EXCEPT THE DROP-WEIGHT TEAR TEST IN SECTION 732 SHALL NOT APPLY TO THE STRUCTURAL TUBING IN THIS STANDARD.
3. ALL EXPOSED CUT OR SHEARED EDGES SHALL BE ROUNDED TO A 1/16" RADIUS AND BE FREE OF BURRS.
4. RAIL POSTS SHALL BE SET NORMAL TO GRADE.
5. SECTIONS OF RAIL TUBE SHALL BE ATTACHED TO A MINIMUM OF TWO (2) RAIL POSTS AND PREFERABLY TO AT LEAST FOUR (4) POSTS.
6. RAIL TUBE EXPANSION JOINTS SHALL BE PROVIDED IN ANY RAIL BAY SPANNING A SUPERSTRUCTURE EXPANSION JOINT. EXPANSION JOINT WIDTH SHALL BE "X" AT 45°F AND WILL BE ADJUSTED IN THE FIELD BY THE ENGINEER FOR OTHER TEMPERATURES.
7. ALL PARTS SHALL BE GALVANIZED AFTER FABRICATION IN ACCORDANCE WITH AASHTO M111, EXCEPT THAT HARDWARE SHALL MEET THE REQUIREMENTS OF AASHTO M232.
8. RAIL POSTS ANCHORING NUTS SHALL BE TIGHTENED TO A SNUG FIT AND GIVEN AN ADDITIONAL ONE-EIGHTH TURN.
9. RAIL TUBES SHALL BE ATTACHED USING 3/4" FULL DIAMETER BODY AASHTO M164 (TYPE I) ROUND HEAD BOLTS INSERTED THROUGH THE FACE OF THE TUBE. HOLES IN POSTS SHALL BE 1/16" LARGER THAN THE BOLT SIZE.
10. HOLES IN RAILS FOR RAIL TUBE ATTACHMENT MAY BE FIELD-DRILLED. HOLES SHALL BE COATED WITH AN APPROVED ZINC-RICH PAINT PRIOR TO ERECTION.
11. IF THERE IS A CONFLICT BETWEEN THESE STANDARD DETAILS AND THE DESIGN, THE REQUIREMENTS OF THE DESIGN DRAWINGS SHALL BE FOLLOWED.
12. ANY BENDING OF RAIL SHALL BE BY SHOP PROCEDURE ONLY.
13. THE FABRICATOR SHALL SUBMIT SHOP DRAWINGS INCLUDING WELDING PROCEDURES TO THE STRUCTURES SECTION FOR APPROVAL IN ACCORDANCE WITH THE PROVISION OF 506.04, SHOP DRAWINGS. ALL WELDING SHALL CONFORM WITH SECTION 506.10.
14. RAIL POSTS AND BASE PLATES SHALL BE TESTED FOR IMPACT PROPERTIES IN ACCORDANCE WITH ASTM A-370 CHARPY IMPACT TESTING USING TYPE A SPECIMEN.

MATERIALS

RAIL TUBES.....ASTM A500, GRADE B OR ASTM A501
RAIL POSTS AND BASE PLATES.....ASTM A709A709M, GRADE 50
ALL OTHER SHAPES AND PLATES.....ASTM A709/A709M, GRADE 36
ANCHOR STUDS.....ASTM A449
ALL OTHER BOLTS (UNLESS NOTED).....AASHTO M164, TYPE I

NUTS FOR AASHTO M164 BOLTS AND FOR ANCHOR STUDS SHALL COMPLY WITH AASHTO M291 (ASTM A563).

WASHERS SHALL COMPLY WITH AASHTO M293 (ASTM F436) SPECIFICATIONS.

1/8" PAD SHALL COMPLY WITH STANDARD SPECIFICATION SUBSECTION 731.01 OR 731.02.

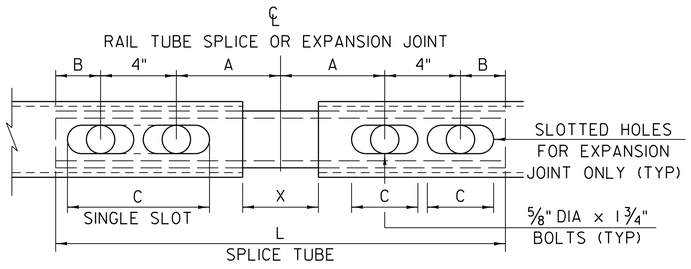

RAIL TUBE SPLICE AND RAIL EXPANSION JOINT DETAIL
(BOTTOM VIEW)

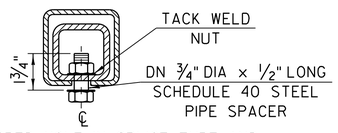

5/8" DIA TAPPED HOLE IN SPLICE TUBE AND 1 1/8" x 'C' SLOT IN RAIL TUBE FOR 5/8" DIA BOLT AND PLAIN HARDENED WASHER

EXPANSION JOINT SECTION

FOR DETAILS NOT SHOWN, SEE "RAIL TUBE SPLICE SECTION."

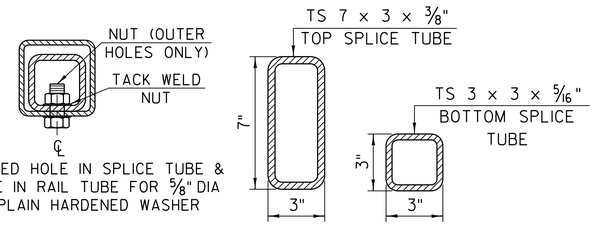

5/8" DIA TAPPED HOLE IN SPLICE TUBE & 3/4" DIA HOLE IN RAIL TUBE FOR 5/8" DIA BOLT & PLAIN HARDENED WASHER

RAIL TUBE SPLICE SECTION

SPLICE TABLE

T	A	B	C	L	X
N/A	4"	2"	--	20"	3/4"
EXPANSION JOINT TABLE					
≤4"	4"	2"	2 1/2"	20"	2 1/2"
>4" ≤6 1/2"	5 1/2"	2 3/8"	3 1/2"	23 3/4"	4"
>6 1/2" ≤9"	6 1/2"	3 3/8"	9"*	27 3/4"	5"
>9" ≤13"	8 1/2"	4 3/8"	11"*	33 3/4"	7"

T = TOTAL MOVEMENT BETWEEN BRIDGE EXPANSION JOINTS. SEE NOTE 6.
* = SINGLE SLOT

PROJECT NAME: ST. ALBANS
PROJECT NUMBER: HP 8000(17)

FILE NAME: 57414_brail.dgn
PROJECT LEADER: J. D. SALADINO
DESIGNED BY: S.G. FARNSWORTH
BRIDGE RAIL-CURB MOUNTED (SHEET 1 OF 3)
PLOT DATE: 3/4/2016
DRAWN BY: C.J. HAKEY
CHECKED BY: ------
SHEET 219 OF 230

VHB 57414

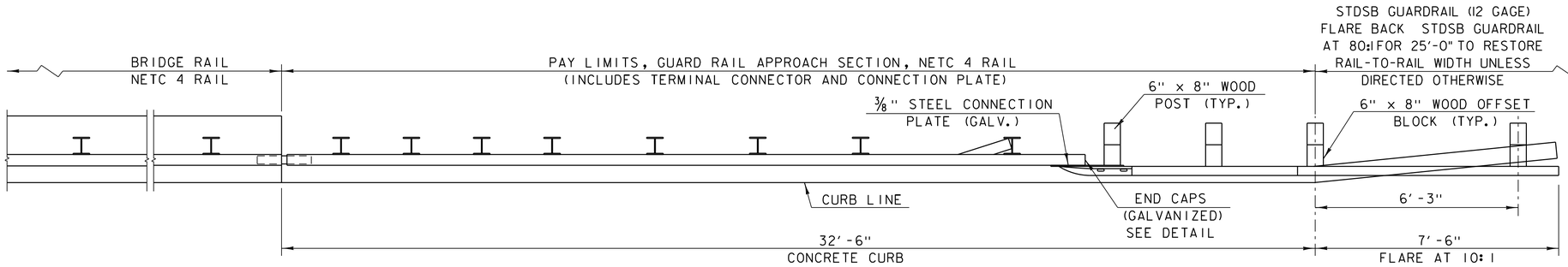

PLAN VIEW - APPROACH RAIL

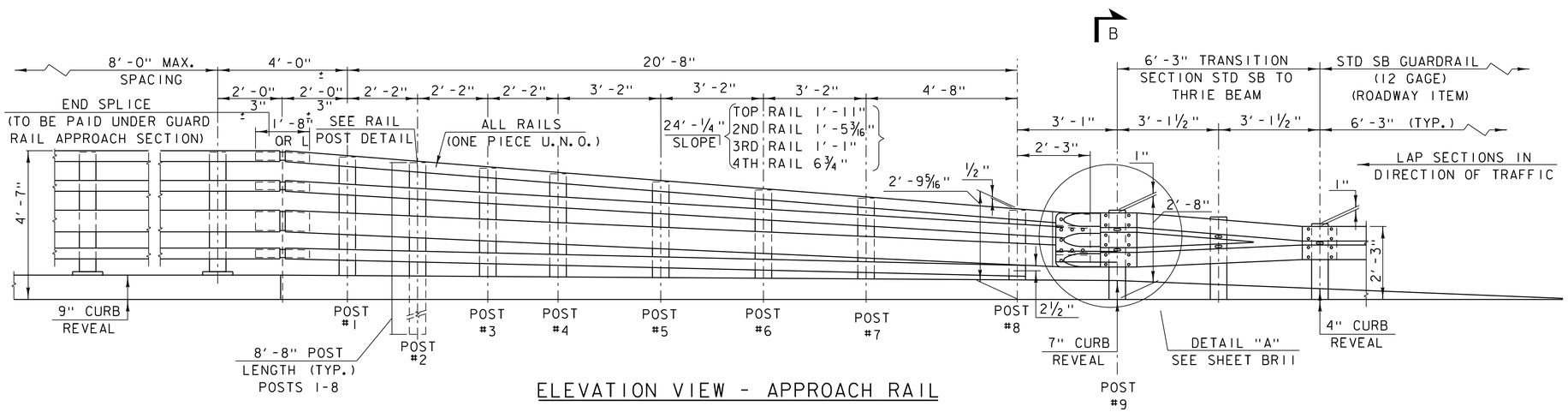

ELEVATION VIEW - APPROACH RAIL

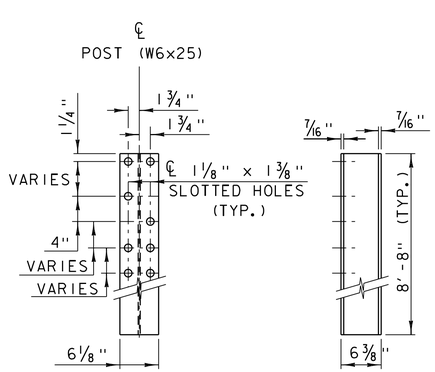

RAIL POST

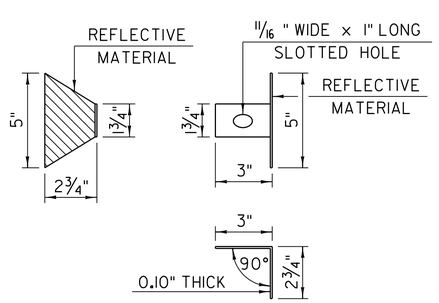

DELINEATION
DEVICE DETAILS

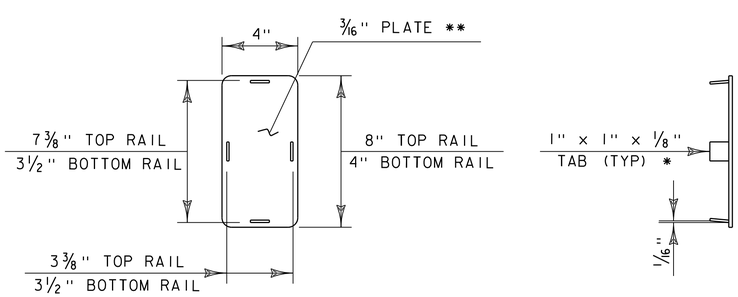

END CAP DETAIL

* WELD TABS TO END CAP PLATE IN TAPERED POSITION SO CAP CAN BE JAMMED INTO END OF RAIL TUBE.

** ROUND CORNERS 1/2" RADIUS (TYP)

NOTES

1. REFER TO SHEET BR9 FOR ADDITIONAL DETAILS, NOTES AND MATERIAL SPECIFICATIONS.
2. PAYMENT FOR GUARD RAIL APPROACH SECTION - NETC 4 RAIL SHALL INCLUDE THE TERMINAL CONNECTOR, THE CONNECTION PLATE, RAIL, POSTS, BLOCKS AND ATTACHMENT HARDWARE.
3. THE REFLECTORIZED ALUMINUM DELINEATION IS TO BE ERECTED EVERY 30' (OR CLOSEST POST) WITH A 5/8" DIAMETER BOLT. DELINEATORS SHALL MEET SPECIFICATION REQUIREMENTS FOR ASTM B209 ALLOY 5052-H32.
4. REFLECTIVE MATERIAL SHALL MEET REQUIREMENTS OF SUBSECTION 750.08 AND SHALL BE OF ENCAPSULATED LENS SILVER OR AMBER. AMBER IS TO BE INSTALLED ON THE DRIVER'S LEFT AND SILVER ON THEIR RIGHT.
5. ON BRIDGES WITH A SIDEWALK, DELINEATORS ARE NOT TO BE INSTALLED ON THE SIDEWALK SIDE OF THE BRIDGE (I.E. DELINEATORS INSTALLED ONLY ON THE CURB SIDE AND ON THE APPROACH ON THE CURB SIDE). PAYMENT SHALL BE SUBSIDIARY TO ALL OTHER ITEMS.
6. ALL APPROACH RAIL SPLICES SHALL BE LAPPED IN THE DIRECTION OF TRAFFIC FLOW.
7. ALL BRIDGE APPROACH RAIL MATERIALS, DIMENSION SIZES AND NOTES SHALL BE THE SAME AS THOSE OF THE BRIDGE RAIL, UNLESS OTHERWISE NOTED.
8. CARRIAGE BOLTS SHALL BE AASHTO M164 AND NUTS SHALL BE ASTM A563 GRADE A OR BETTER (GALVANIZED).
9. WELD SPLICE BARS TO FIT BEND. USE COMPLETE PENETRATION WELD (B-U2).
10. THE CONCRETE CURB WILL BE PAID FOR AS ITEM 616.20, "CAST- IN-PLACE CONCRETE CURB, TYPE B."

PROJECT NAME: ST. ALBANS	
PROJECT NUMBER: HP 8000(17)	
FILE NAME: 57414_brail.dgn	PLOT DATE: 3/4/2016
PROJECT LEADER: J. D. SALADINO	DRAWN BY: C.J. HAKEY
DESIGNED BY: S.G. FARNSWORTH	CHECKED BY: ------
BRIDGE RAIL-CURB MOUNTED (SHEET 2 OF 3)	SHEET 220 OF 230

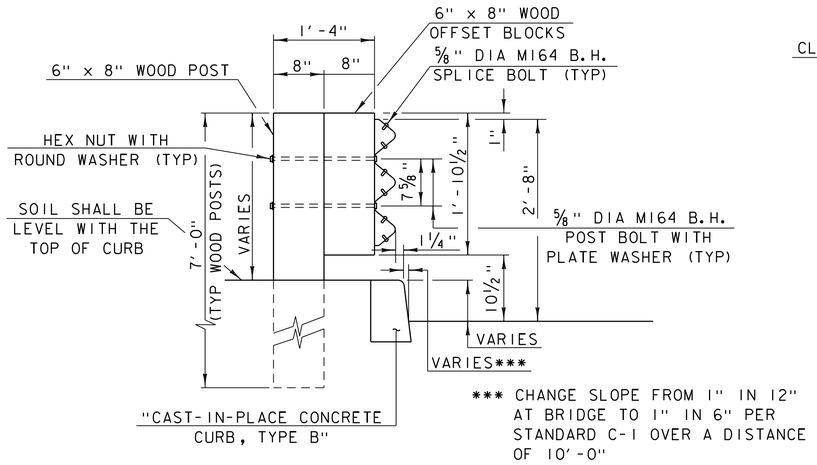

SECTION B-B (POST RAIL ASSEMBLY)

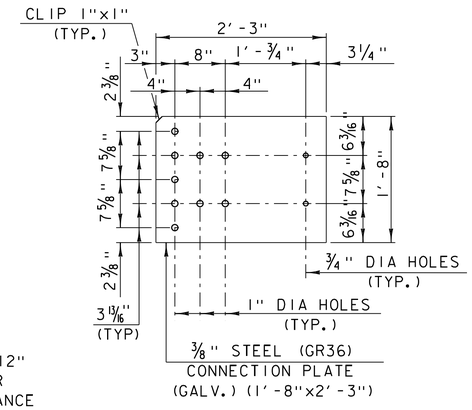

CONNECTION PLATE

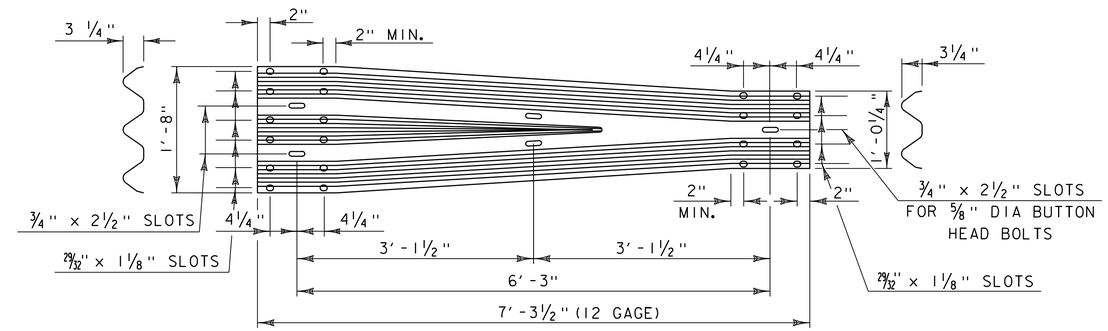

THRIE-BEAM TO STD SB TRANSITION SECTION

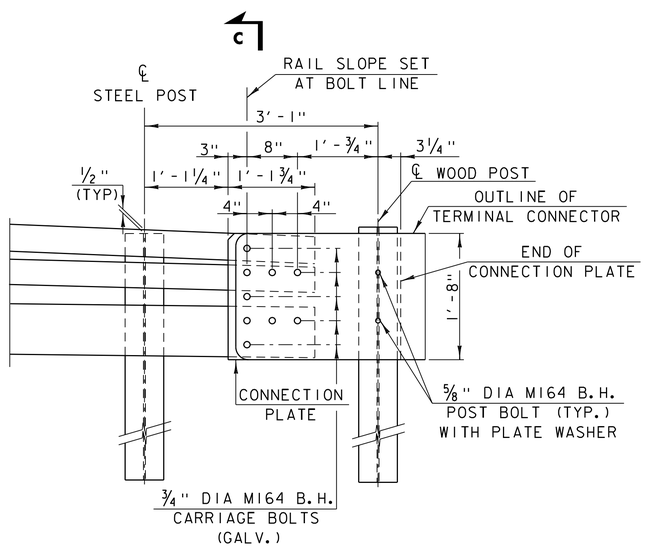

DETAIL A

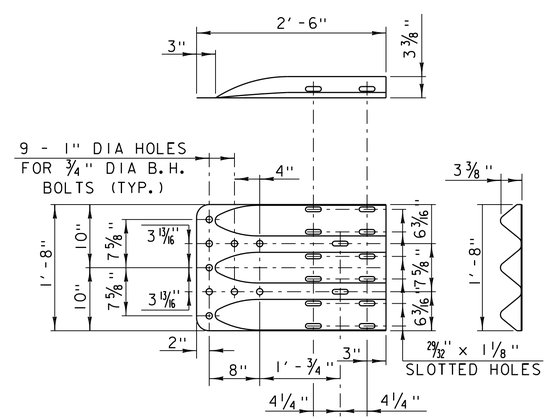

THRIE-BEAM TERMINAL CONNECTOR

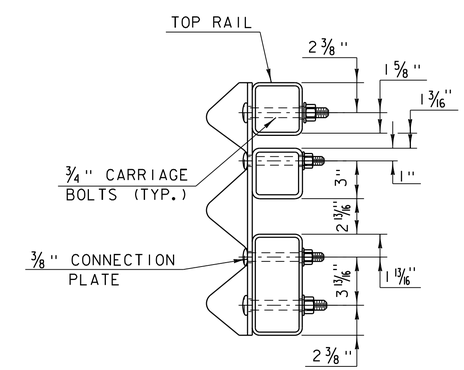

SECTION C-C (CONNECTION PLATE)

PROJECT NAME: ST. ALBANS	
PROJECT NUMBER: HP 8000(17)	
FILE NAME: 57414_brail.dgn	PLOT DATE: 3/4/2016
PROJECT LEADER: J. D. SALADINO	DRAWN BY: C.J. HAKEY
DESIGNED BY: S.G. FARNSWORTH	CHECKED BY: ------
BRIDGE RAIL-CURB MOUNTED (SHEET 3 OF 3)	SHEET 221 OF 230

VHB 57414

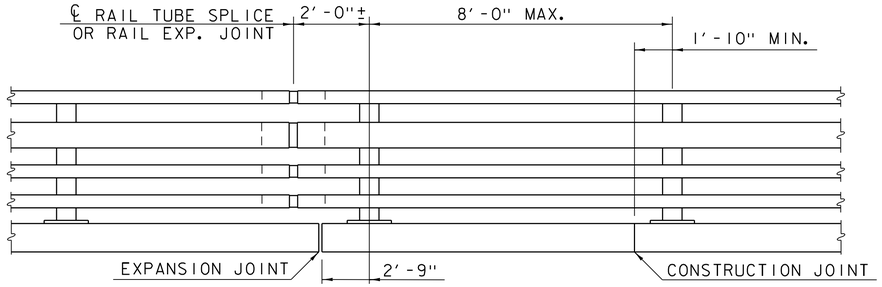

BRIDGE RAILING ELEVATION

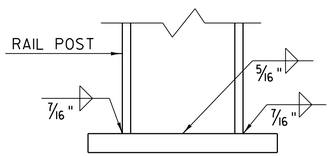

BASE WELD DETAIL

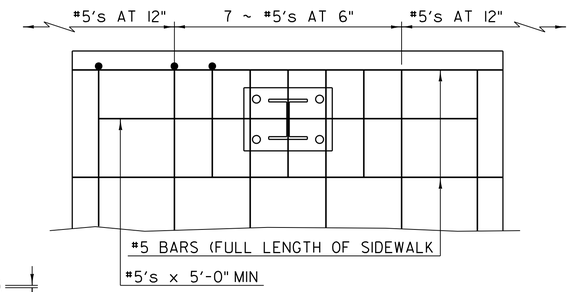

SIDEWALK REINFORCING PLAN

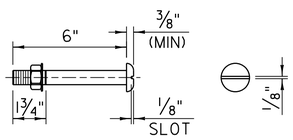

3/4" DIA M164 (TYPE I)
ROUND HEAD BOLT

(WITH WASHER AND PREVAILING TORQUE TYPE LOCK NUT)
(SEE NOTE #9)
ONLY FULL DIAMETER BODY BOLTS WILL BE ALLOWED.

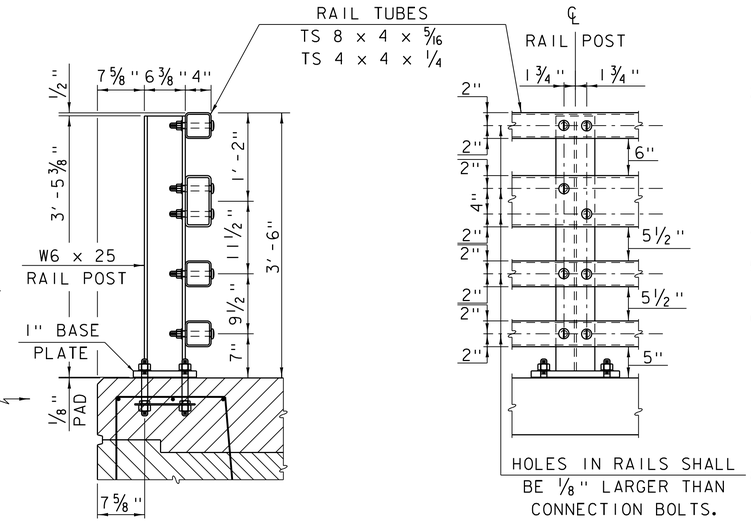

TYPICAL SECTION

ELEVATION

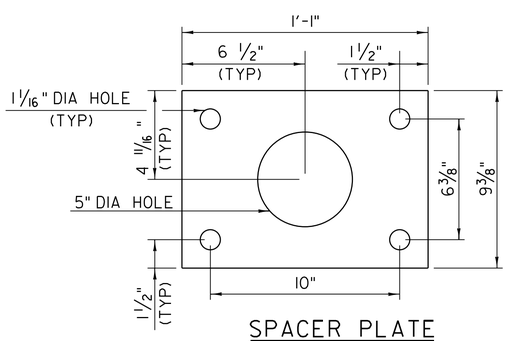

SPACER PLATE

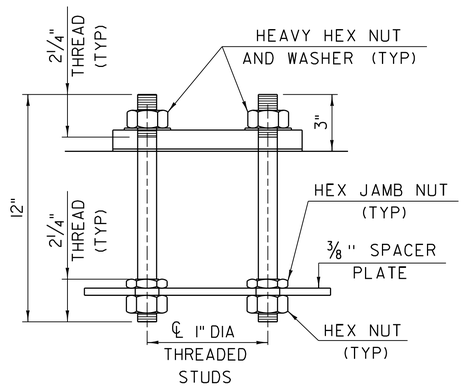

RAIL POST ANCHORAGE

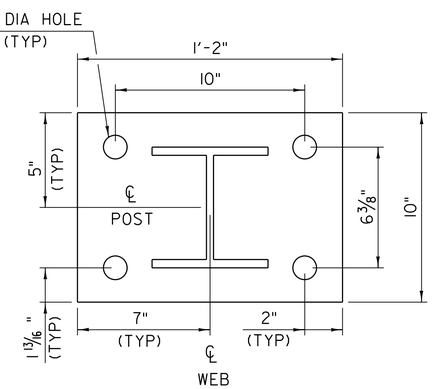

POST AND BASE PLATE

NOTES

1. ALL WORK AND MATERIALS SHALL CONFORM TO THE PROVISIONS OF SECTION 525 - RAILINGS OF THE STANDARD SPECIFICATION FOR CONSTRUCTION.
2. TUBING AND POSTS SHALL MEET THE REQUIREMENTS OF SECTION 732 - RAILING MATERIALS OF THE STANDARD SPECIFICATIONS FOR CONSTRUCTION EXCEPT THE DROP-WEIGHT TEAR TEST IN SECTION 732 SHALL NOT APPLY TO THE STRUCTURAL TUBING IN THIS STANDARD.
3. ALL EXPOSED CUT OR SHEARED EDGES SHALL BE ROUNDED TO A 1/16" RADIUS AND BE FREE OF BURRS.
4. RAIL POSTS SHALL BE SET NORMAL TO GRADE.
5. SECTIONS OF RAIL TUBE SHALL BE ATTACHED TO A MINIMUM OF TWO (2) RAIL POSTS AND PREFERABLY TO AT LEAST FOUR (4) POSTS.
6. RAIL TUBE EXPANSION JOINTS SHALL BE PROVIDED IN ANY RAIL BAY SPANNING A SUPERSTRUCTURE EXPANSION JOINT. EXPANSION JOINT WIDTH SHALL BE "X" AT 45°F AND WILL BE ADJUSTED IN THE FIELD BY THE ENGINEER FOR OTHER TEMPERATURES.
7. ALL PARTS SHALL BE GALVANIZED AFTER FABRICATION IN ACCORDANCE WITH AASHTO M111, EXCEPT THAT HARDWARE SHALL MEET THE REQUIREMENTS OF AASHTO M232.
8. RAIL POSTS ANCHORING NUTS SHALL BE TIGHTENED TO A SNUG FIT AND GIVEN AN ADDITIONAL ONE-EIGHTH TURN.
9. RAIL TUBES SHALL BE ATTACHED USING 3/4" FULL DIAMETER BODY AASHTO M164 (TYPE I) ROUND HEAD BOLTS INSERTED THROUGH THE FACE OF THE TUBE. HOLES IN POSTS SHALL BE 1/16" LARGER THAN THE BOLT SIZE.
10. HOLES IN RAILS FOR RAIL TUBE ATTACHMENT MAY BE FIELD-DRILLED. HOLES SHALL BE COATED WITH AN APPROVED ZINC-RICH PAINT PRIOR TO ERECTION.
11. IF THERE IS A CONFLICT BETWEEN THESE STANDARD DETAILS AND THE DESIGN, THE REQUIREMENTS OF THE DESIGN DRAWINGS SHALL BE FOLLOWED.
12. ANY BENDING OF RAIL SHALL BE BY SHOP PROCEDURE ONLY.
13. THE FABRICATOR SHALL SUBMIT SHOP DRAWINGS INCLUDING WELDING PROCEDURES TO THE STRUCTURES SECTION FOR APPROVAL IN ACCORDANCE WITH THE PROVISION OF 506.04, SHOP DRAWINGS. ALL WELDING SHALL CONFORM WITH SECTION 506.10.
14. RAIL POSTS AND BASE PLATES SHALL BE TESTED FOR IMPACT PROPERTIES IN ACCORDANCE WITH ASTM A-370 CHARPY IMPACT TESTING USING TYPE A SPECIMEN.

MATERIALS

RAIL TUBES.....ASTM A500, GRADE B OR ASTM A501
RAIL POSTS AND BASE PLATES.....ASTM A709A709M, GRADE 50
ALL OTHER SHAPES AND PLATES.....ASTM A709/A709M, GRADE 36
ANCHOR STUDS.....ASTM A449
ALL OTHER BOLTS (UNLESS NOTED).....AASHTO M164, TYPE I

NUTS FOR AASHTO M164 BOLTS AND FOR ANCHOR STUDS SHALL COMPLY WITH AASHTO M291 (ASTM A563).

WASHERS SHALL COMPLY WITH AASHTO M293 (ASTM F436) SPECIFICATIONS.

1/8" PAD SHALL COMPLY WITH STANDARD SPECIFICATION SUBSECTION 731.01 OR 731.02.

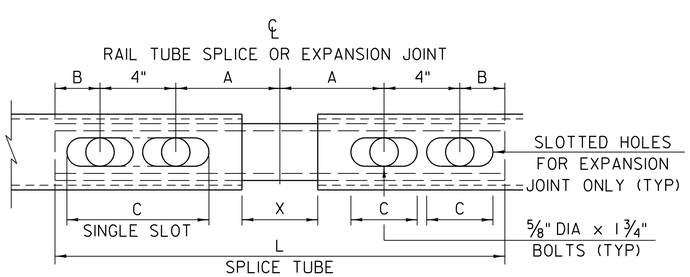

RAIL TUBE SPLICE AND RAIL
EXPANSION JOINT DETAIL
(BOTTOM VIEW)

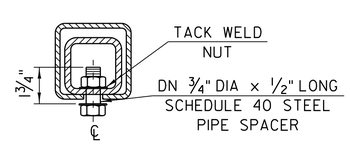

5/8" DIA TAPPED HOLE IN SPLICE TUBE AND 1 1/8" x 'C' SLOT IN RAIL TUBE FOR 5/8" DIA BOLT AND PLAIN HARDENED WASHER

EXPANSION JOINT SECTION

FOR DETAILS NOT SHOWN,
SEE "RAIL TUBE SPLICE SECTION."

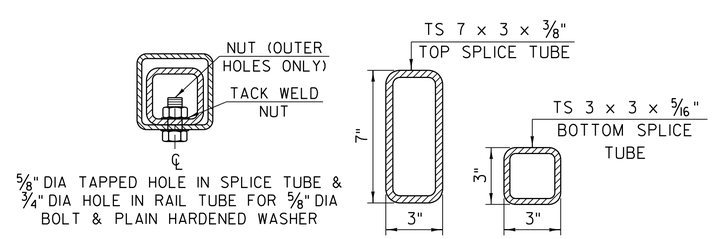

5/8" DIA TAPPED HOLE IN SPLICE TUBE &
3/4" DIA HOLE IN RAIL TUBE FOR 5/8" DIA
BOLT & PLAIN HARDENED WASHER

RAIL TUBE SPLICE SECTION

SPLICE TABLE					
T	A	B	C	L	X
N/A	4"	2"	--	20"	3/4"
EXPANSION JOINT TABLE					
≤4"	4"	2"	2 1/2"	20"	2 1/2"
>4" ≤6 1/2"	5 1/2"	2 3/8"	3 1/2"	23 3/4"	4"
>6 1/2" ≤9"	6 1/2"	3 3/8"	9"*	27 3/4"	5"
>9" ≤13"	8 1/2"	4 3/8"	11"*	33 3/4"	7"

T = TOTAL MOVEMENT BETWEEN BRIDGE EXPANSION JOINTS. SEE NOTE 6.
* = SINGLE SLOT

PROJECT NAME: ST. ALBANS
PROJECT NUMBER: HP 8000(17)

FILE NAME: 57414_brail.dgn
PROJECT LEADER: J. D. SALADINO
DESIGNED BY: S.G. FARNSWORTH
BRIDGE RAIL-SIDEWALK (SHEET 1 OF 3)
PLOT DATE: 3/4/2016
DRAWN BY: C.J. HAKEY
CHECKED BY: ------
SHEET 222 OF 230

VHB 57414

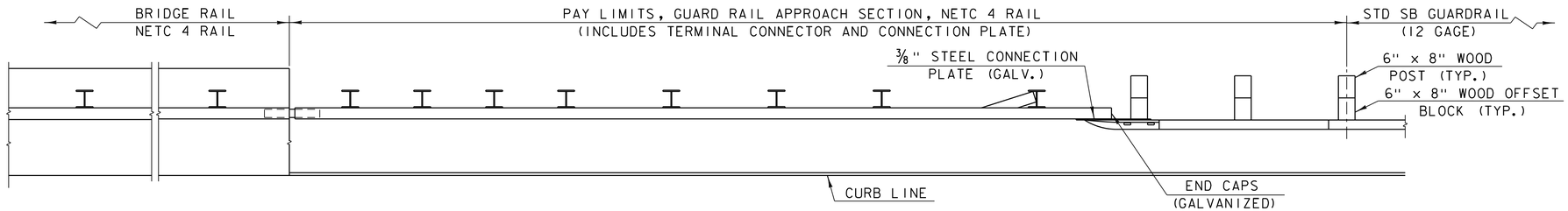

PLAN VIEW - APPROACH RAIL

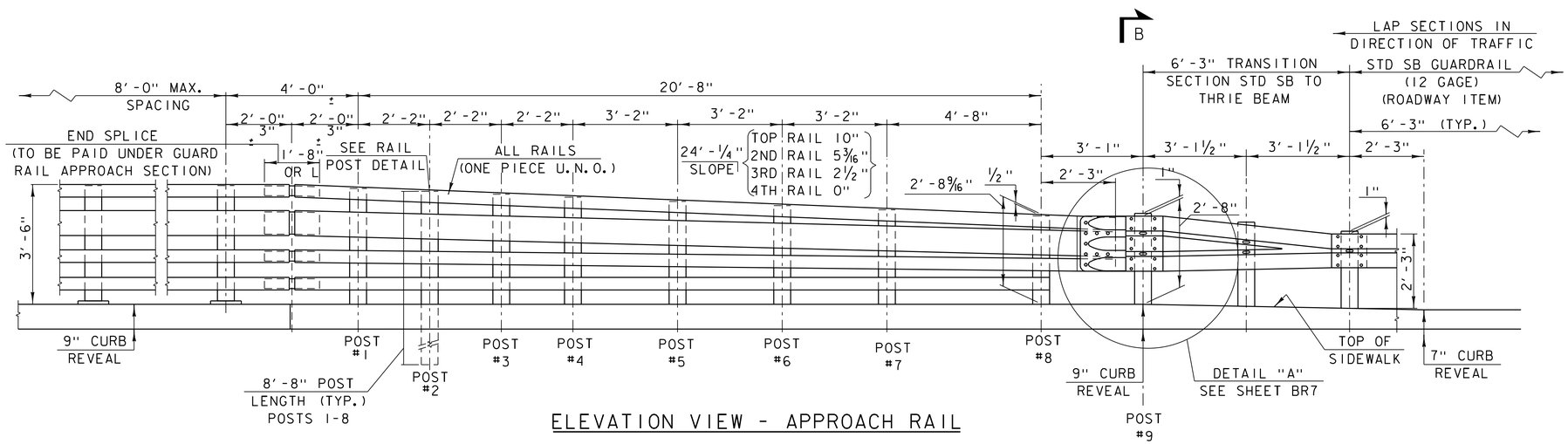

ELEVATION VIEW - APPROACH RAIL

NOTES

1. REFER TO SHEET BR5 FOR ADDITIONAL DETAILS, NOTES AND MATERIAL SPECIFICATIONS.
2. PAYMENT FOR GUARD RAIL APPROACH SECTION - NETC 4 RAIL SHALL INCLUDE THE TERMINAL CONNECTOR, THE CONNECTION PLATE, RAIL, POSTS, BLOCKS AND ATTACHMENT HARDWARE.
3. NOT USED.
4. NOT USED.
5. NOT USED
6. ALL APPROACH RAIL SPLICES SHALL BE LAPPED IN THE DIRECTION OF TRAFFIC FLOW.
7. ALL BRIDGE APPROACH RAIL MATERIALS, DIMENSION SIZES AND NOTES SHALL BE THE SAME AS THOSE OF THE BRIDGE RAIL, UNLESS OTHERWISE NOTED.
8. CARRIAGE BOLTS SHALL BE AASHTO M164 AND NUTS SHALL BE ASTM A563 GRADE A OR BETTER (GALVANIZED).
9. WELD SPLICE BARS TO FIT BEND. USE COMPLETE PENETRATION WELD (B-U2).
10. NOT USED.

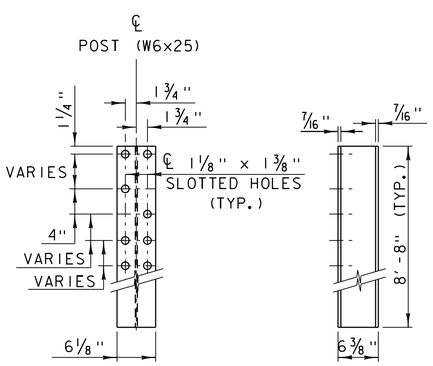

RAIL POST

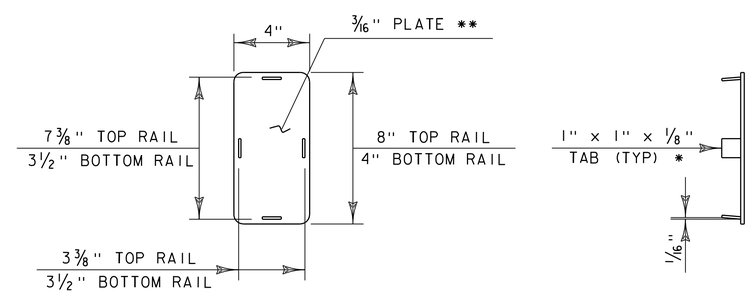

END CAP DETAIL

* WELD TABS TO END CAP PLATE IN TAPERED POSITION SO CAP CAN BE JAMMED INTO END OF RAIL TUBE.

** ROUND CORNERS 1/2" RADIUS (TYP)

PROJECT NAME: ST. ALBANS	
PROJECT NUMBER: HP 8000(17)	
FILE NAME: 57414_brail.dgn	PLOT DATE: 3/4/2016
PROJECT LEADER: J. D. SALADINO	DRAWN BY: C.J. HAKEY
DESIGNED BY: S.G. FARNSWORTH	CHECKED BY: ------
BRIDGE RAIL-SIDEWALK (SHEET 2 OF 3)	SHEET 223 OF 230

VHB 57414

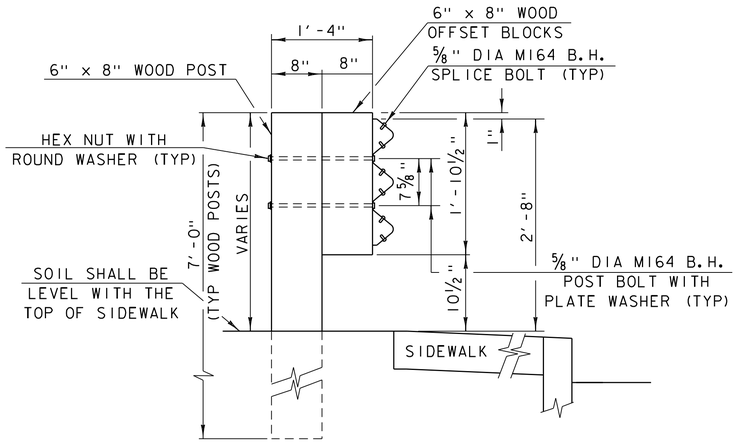

SECTION B-B (POST RAIL ASSEMBLY)

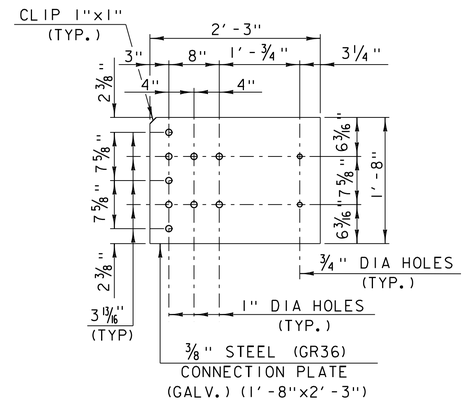

CONNECTION PLATE

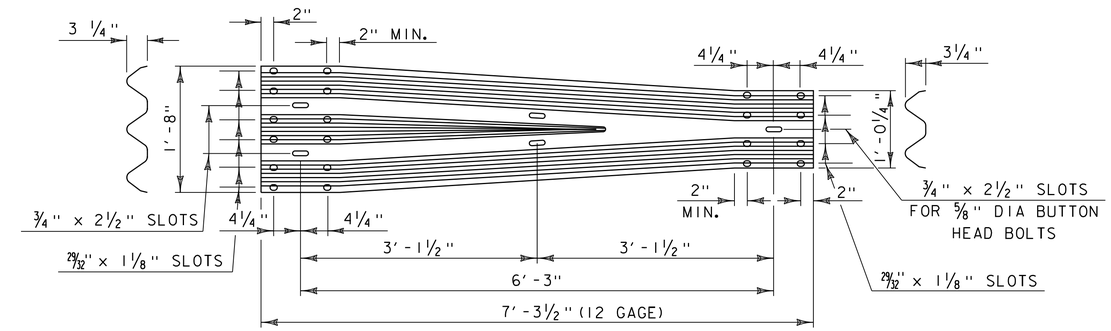

THRIE-BEAM TO STD SB TRANSITION SECTION

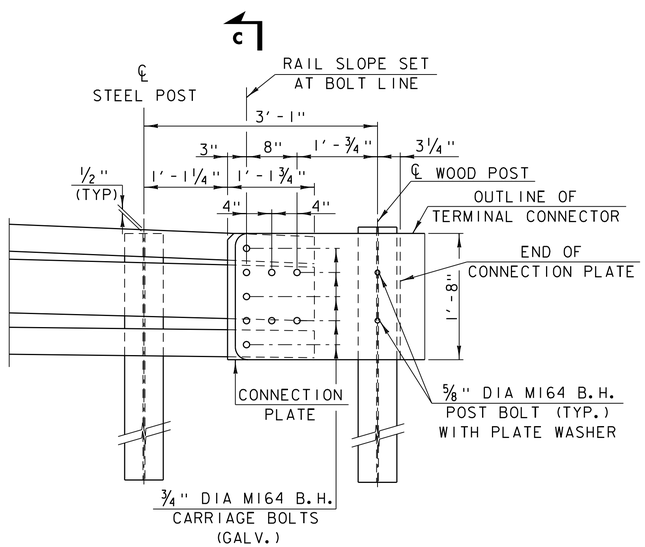

DETAIL A

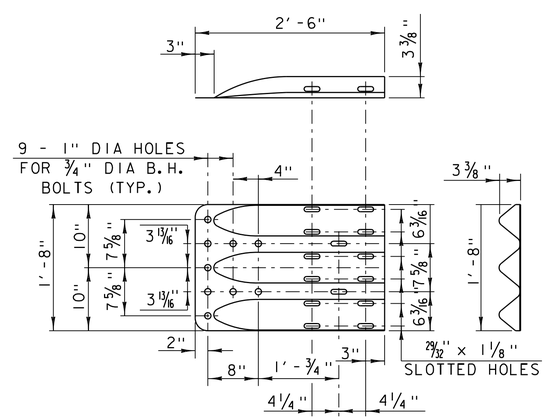

THRIE-BEAM TERMINAL CONNECTOR

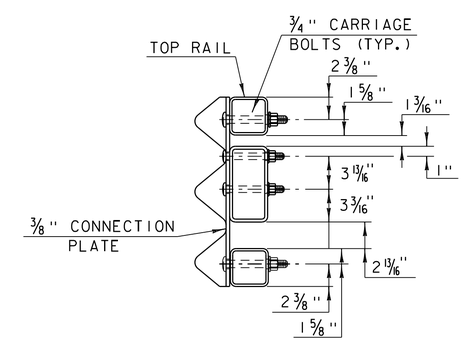

SECTION C-C (CONNECTION PLATE)

PROJECT NAME: ST. ALBANS	
PROJECT NUMBER: HP 8000(17)	
FILE NAME: 57414_brail.dgn	PLOT DATE: 3/4/2016
PROJECT LEADER: J. D. SALADINO	DRAWN BY: C.J. HAKEY
DESIGNED BY: S.G. FARNSWORTH	CHECKED BY: ------
BRIDGE RAIL-SIDEWALK (SHEET 3 OF 3)	SHEET 224 OF 230

VHB 57414

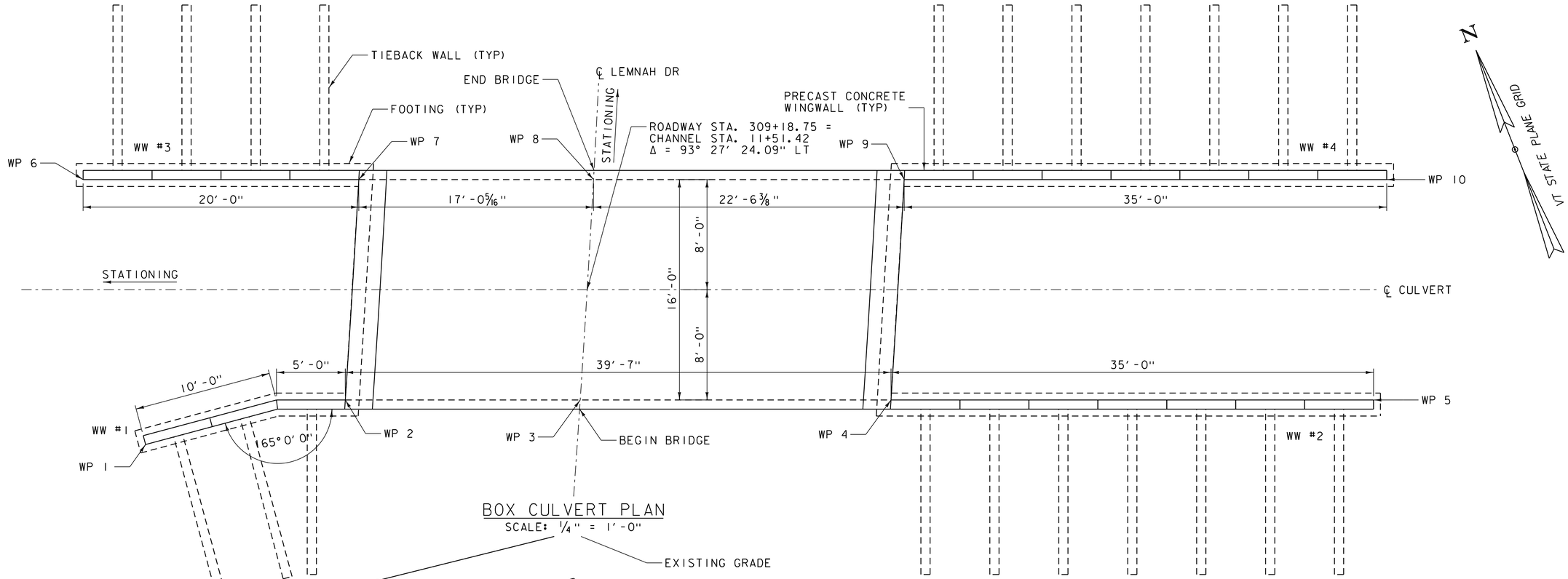

BOX CULVERT PLAN
SCALE: 1/4" = 1'-0"

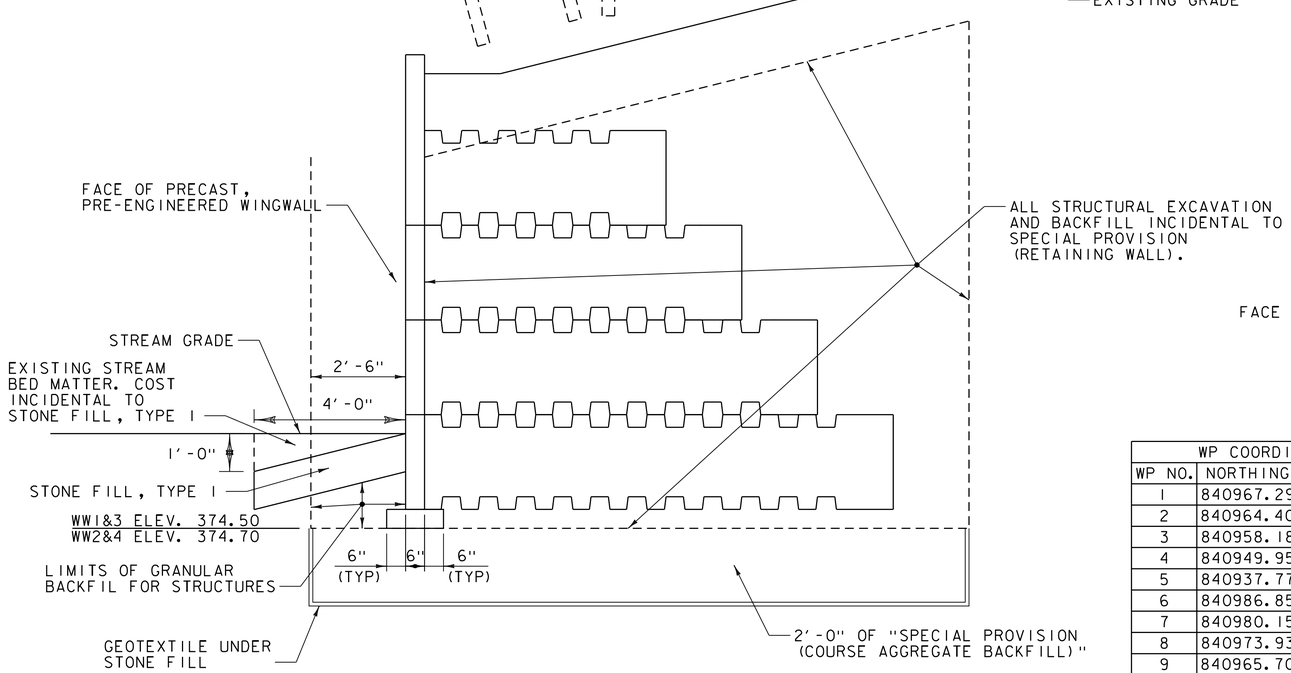

SECTION A-A
WINGWALL FOOTING
SCALE: 1/2" = 1'-0"

WP COORDINATES		
WP NO.	NORTHING	EASTING
1	840967.29	1487379.80
2	840964.40	1487394.18
3	840958.18	1487410.04
4	840949.95	1487431.03
5	840937.77	1487463.90
6	840986.85	1487382.60
7	840980.15	1487401.49
8	840973.93	1487417.34
9	840965.70	1487438.32
10	870952.32	1487470.63

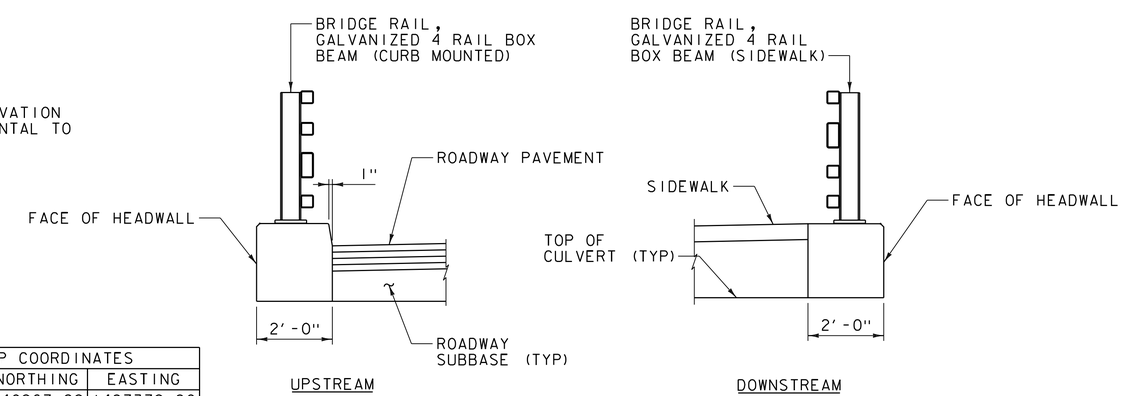

SECTION B-B
HEADWALL DETAIL
SCALE: 1/2" = 1'-0"

PROJECT NAME: ST. ALBANS
PROJECT NUMBER: HP 8000(17)

FILE NAME: 57414_det.dgn
PROJECT LEADER: M.A. COLGAN
DESIGNED BY: S.G. FARNSWORTH
CULVERT PLAN & WINGWALL DETAILS

PLOT DATE: 3/4/2016
DRAWN BY: C.J. HAKEY
CHECKED BY:
SHEET 225 OF 230

VHB 57414.00

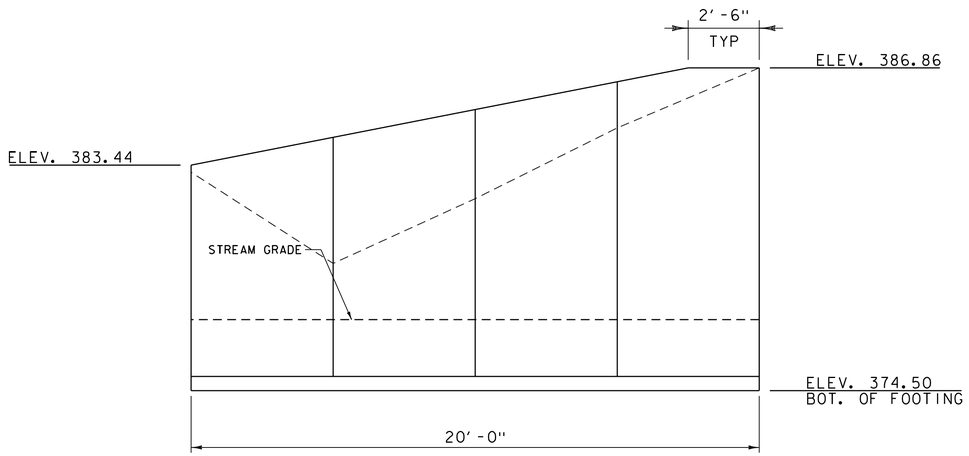

WW #3
SCALE: 3/8" = 1'-0"

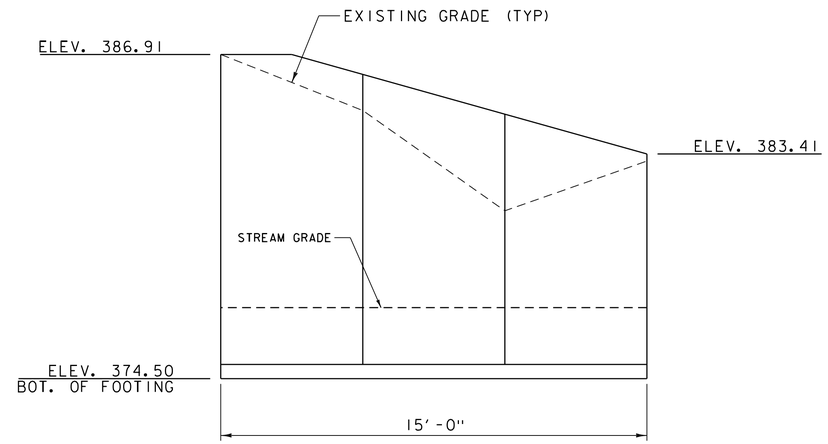

WW #1
SCALE: 3/8" = 1'-0"

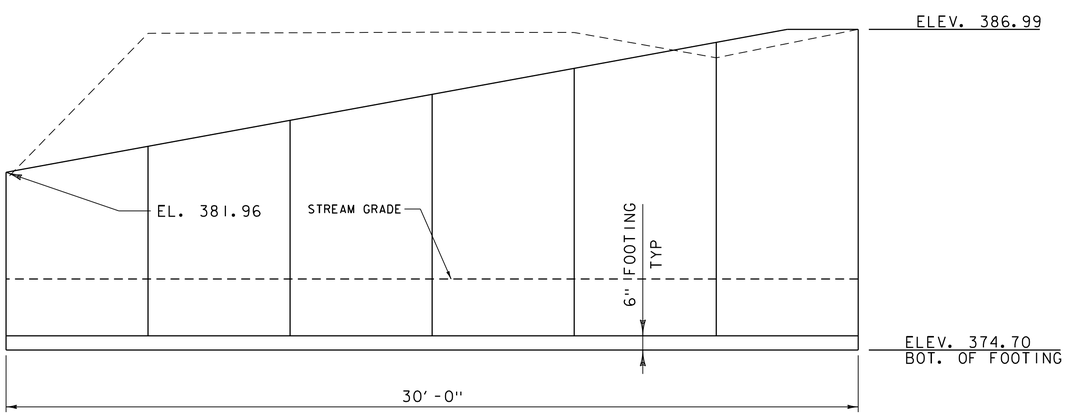

WW #2
SCALE: 3/8" = 1'-0"

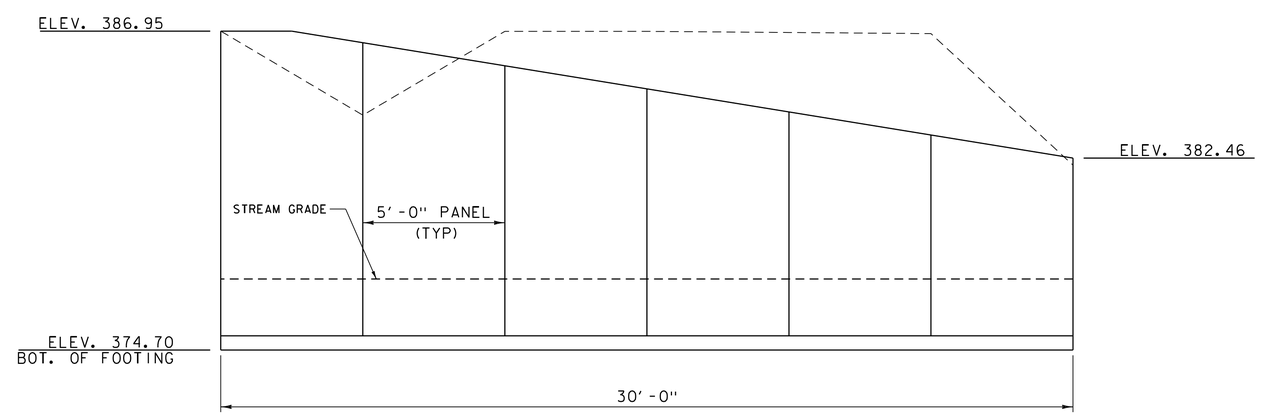

WW #4
SCALE: 3/8" = 1'-0"

PROJECT NAME: ST. ALBANS	
PROJECT NUMBER: HP 8000(17)	
FILE NAME: 57414_det.dgn	PLOT DATE: 3/4/2016
PROJECT LEADER: M.A. COLGAN	DRAWN BY: C.J. HAKEY
DESIGNED BY: S.G. FARNSWORTH	CHECKED BY:
WINGWALL DETAILS	SHEET 226 OF 230

VHB 57414.00

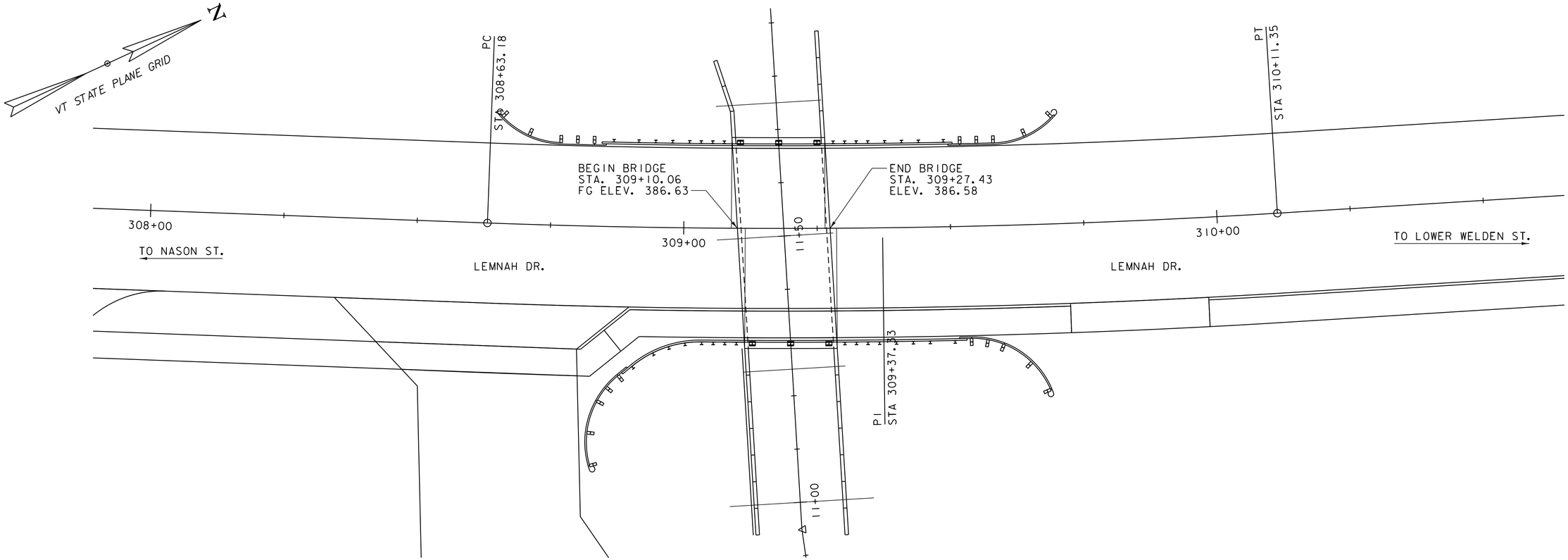

PLAN
SCALE: 1" = 10'-0"

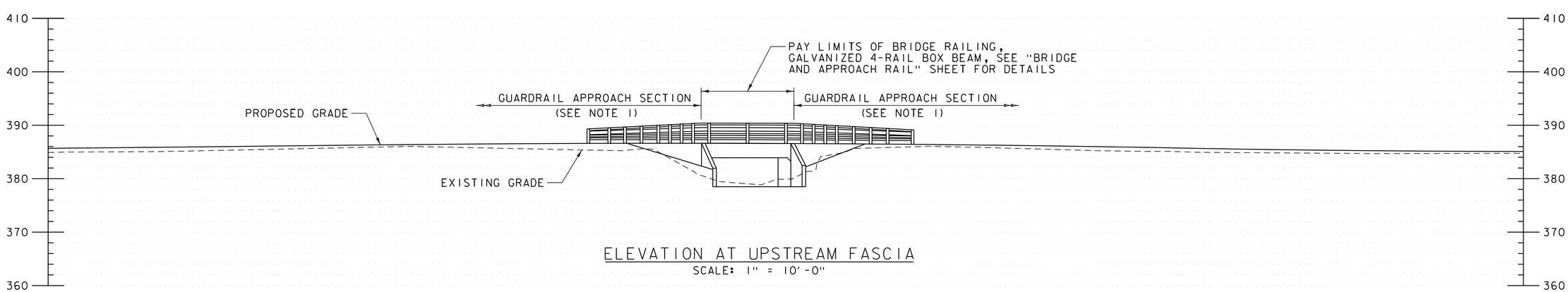

ELEVATION AT UPSTREAM FASCIA
SCALE: 1" = 10'-0"

NOTES:

1. GUARDRAIL APPROACH SECTIONS SHALL BE GALVANIZED 4 RAIL BOX BEAM

PROJECT NAME: ST. ALBANS	
PROJECT NUMBER: HP 8000(17)	
FILE NAME: 57414_pe.dgn	PLOT DATE: 3/4/2016
PROJECT LEADER: J. D. SALADINO	DRAWN BY: C.J. HAKEY
DESIGNED BY: S.G. FARNSWORTH	CHECKED BY: ------
PLAN AND ELEVATION	SHEET 227 OF 230

VHB 57414.00

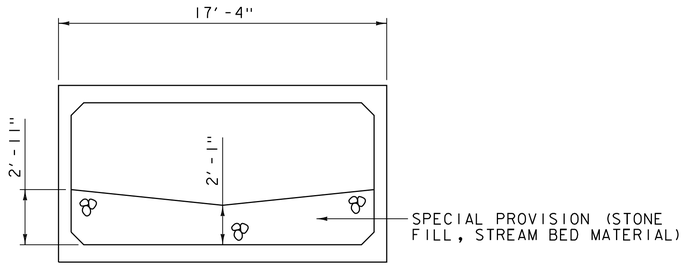

STONE FILL, STREAMBED MATERIAL NOTES:

1. STREAMBED MATERIAL SHALL BE GRADED TO REMAIN STABLE DURING HIGH FLOWS AND TO PROHIBIT SUBSURFACE FLOW DURING LOW FLOW CONDITIONS. SEE TABLE FOR GRADATION SPECIFICATIONS.
2. MINIMUM EMBEDMENT DEPTH SHALL BE 2'-1".

BED RETENTION SILL

1/4" = 1'-0"

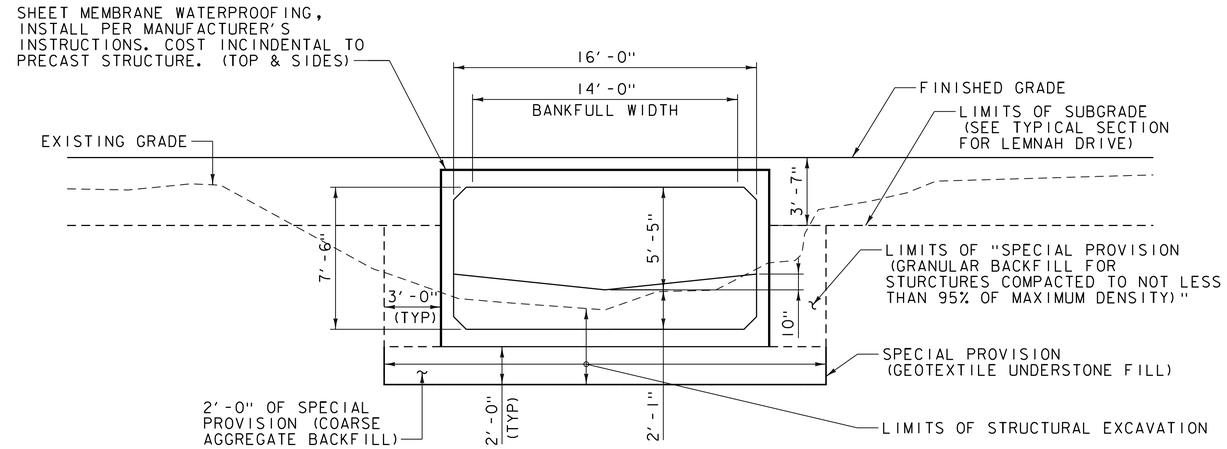

CULVERT TYPICAL SECTION

1/4" = 1'-0"

D(x) %	64-1	METHOD	NOTES
D5	0.00	FULLER-THOMPSON	FINE MATERIAL TO PROHIBIT SUBSURFACE FLOW
D16	0.00	FULLER-THOMPSON	FINE MATERIAL TO PROHIBIT SUBSURFACE FLOW
D50	0.00	ISBASH CURVE	STABLE COARSE MATERIAL
D100	0.00	ISBASH CURVE	IMMOBILE MATERIAL

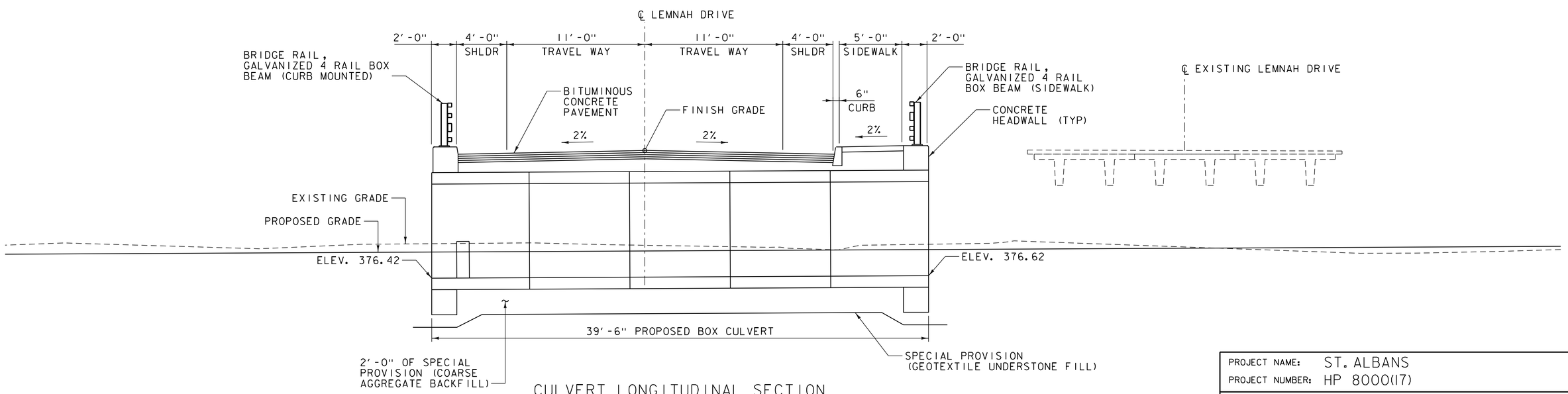

CULVERT LONGITUDINAL SECTION

1/4" = 1'-0"

PROJECT NAME: ST. ALBANS	
PROJECT NUMBER: HP 8000(17)	
FILE NAME: 57414_typ.dgn	PLOT DATE: 3/4/2016
PROJECT LEADER: J. D. SALADINO	DRAWN BY: C.J. HAKEY
DESIGNED BY: S.G. FARNSWORTH	CHECKED BY: ------
TYPICAL SECTIONS	SHEET 228 OF 230

VHB 57414

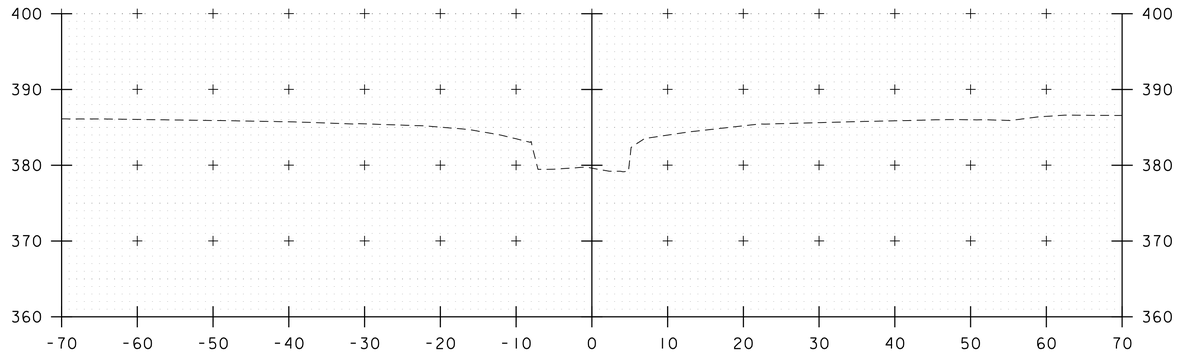

10+50

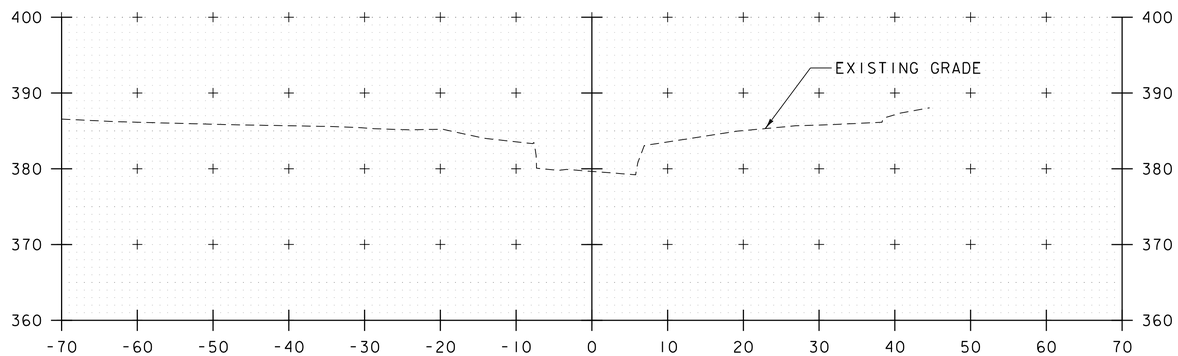

10+25

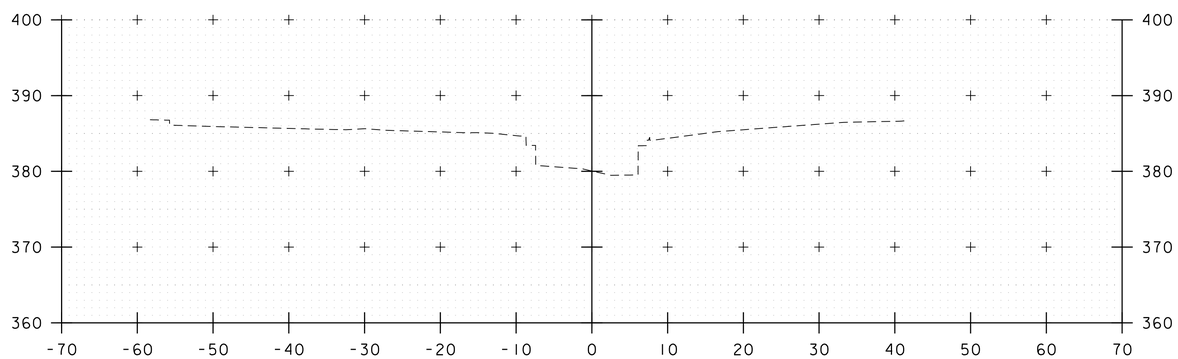

10+00

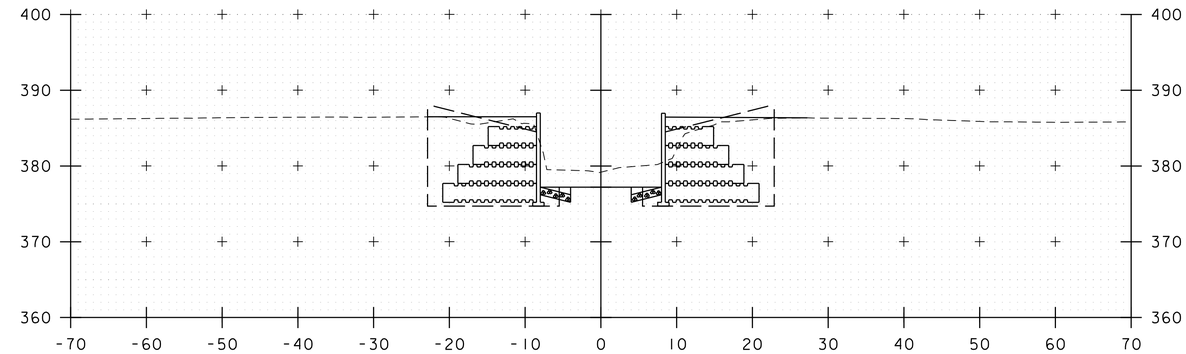

11+25

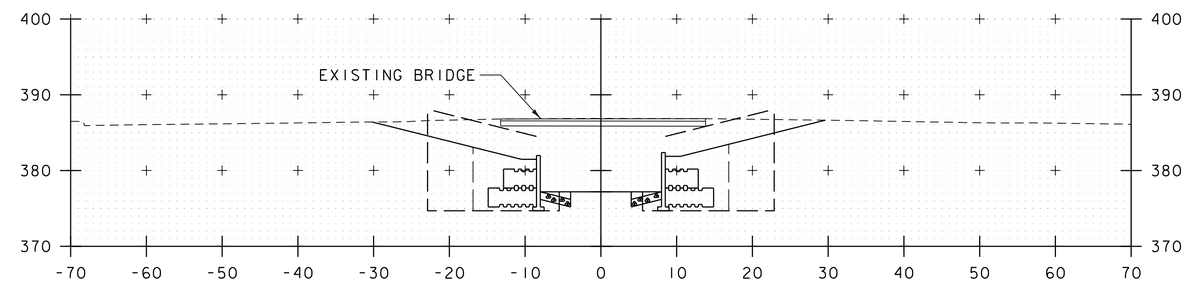

11+00

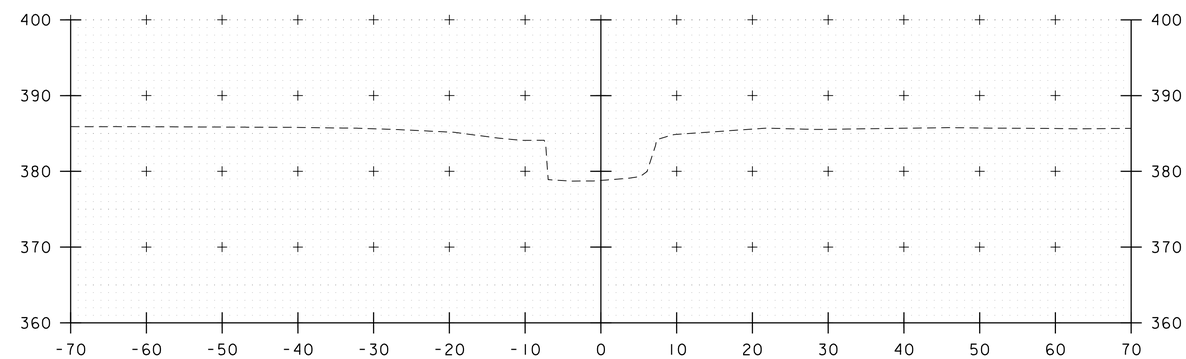

10+75

PROJECT NAME: ST. ALBANS	
PROJECT NUMBER: HPP 8000(17)	
FILE NAME: 57414_xsl.dgn	PLOT DATE: 3/4/2016
PROJECT LEADER: J. D. SALADINO	DRAWN BY: C. J. HAKEY
DESIGNED BY: S. G. FARNSWORTH	CHECKED BY:
CHANNEL CROSS SECTIONS	SHEET 229 OF 230

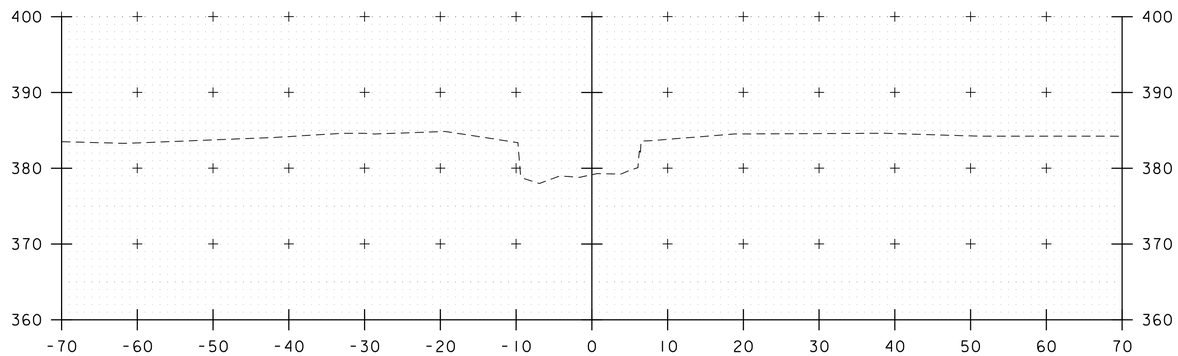

12+00

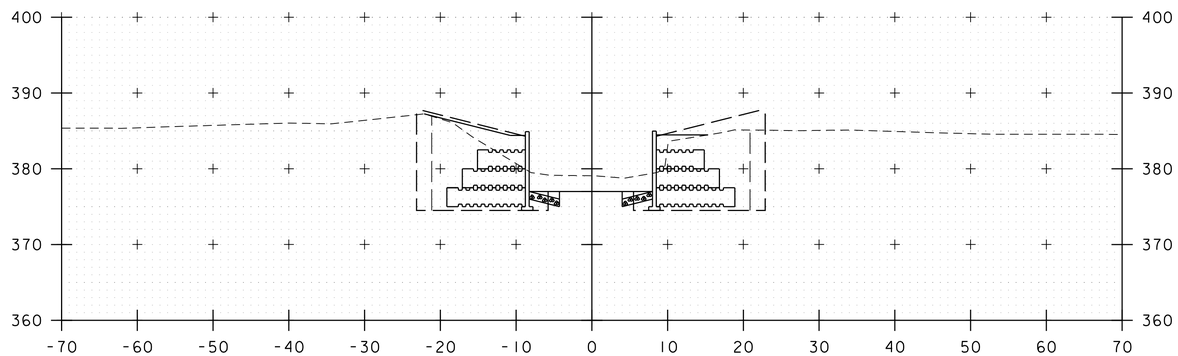

11+75

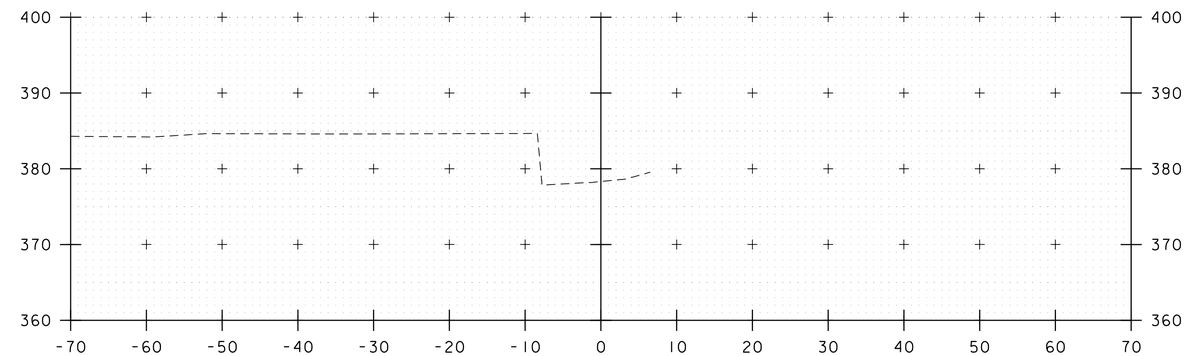

12+30

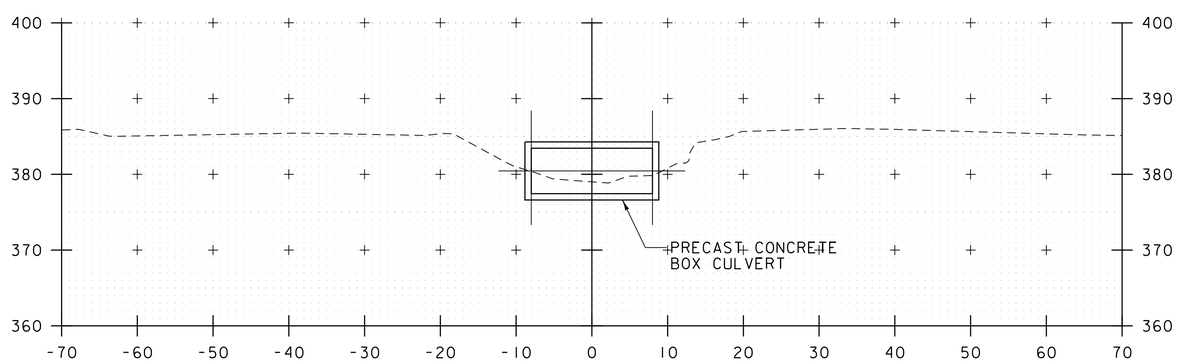

11+50

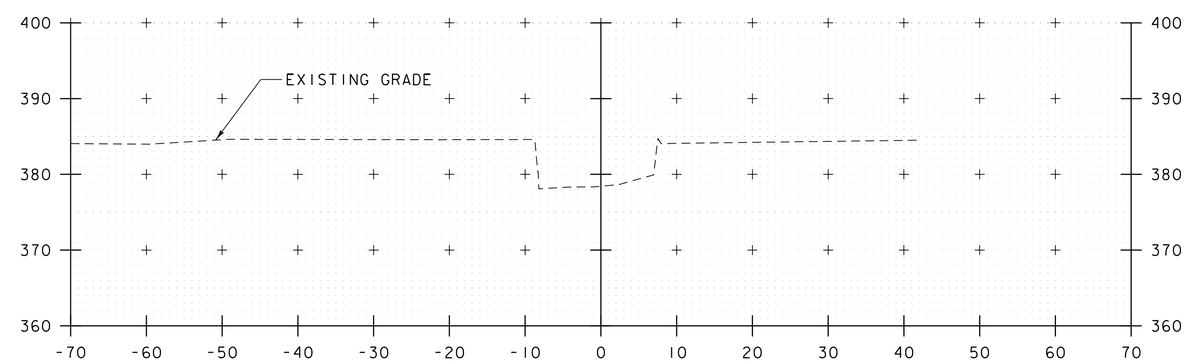

12+25

PROJECT NAME: ST. ALBANS	
PROJECT NUMBER: HPP 8000(17)	
FILE NAME: 57414_xsl.dgn	PLOT DATE: 3/4/2016
PROJECT LEADER: J. D. SALADINO	DRAWN BY: C. J. HAKEY
DESIGNED BY: S. G. FARNSWORTH	CHECKED BY:
CHANNEL CROSS SECTIONS	SHEET 230 OF 230

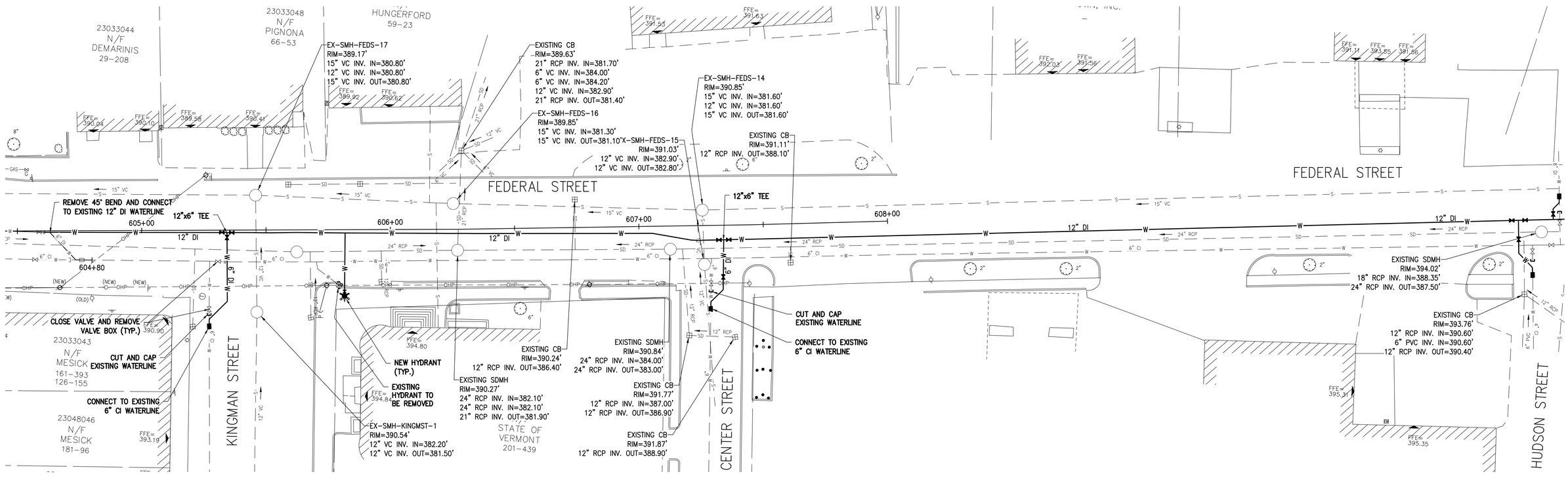

PLAN
SCALE: 1"=20'

GRAPHIC SCALE
0 20 30 40
(IN FEET)

PROJECT NAME: ST. ALBANS	
PROJECT NUMBER: HPP 8000(17)	
FILE NAME: 13091-ST ALBANS-ADDITIONAL	PLOT DATE: 02-02-16
PROJECT LEADER: M.A. COLGAN	DRAWN BY: JEB
DESIGNED BY: J BOOTH	CHECKED BY: M.J. SERVETAS
FEDERAL STREET	SHEET – OF –

091-ST ALBANS\FEDERAL TO LOWER NEWTON\13091-5-TO LOWER NEWTON.dwg, 2/2/2016 8:39:17 AM

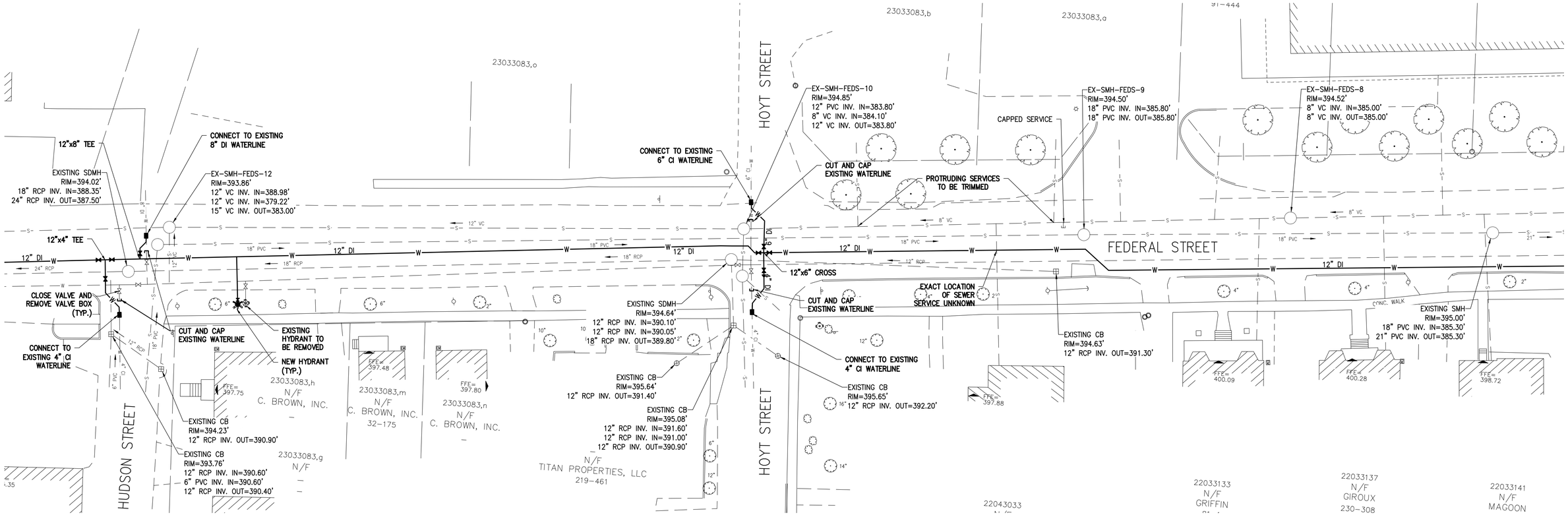

PLAN
SCALE: 1"=20'

GRAPHIC SCALE
0 20 30 40
(IN FEET)

PROJECT NAME: ST. ALBANS	
PROJECT NUMBER: HPP 8000(17)	
FILE NAME: 13091-ST ALBANS-ADDITIONAL	PLOT DATE: 02-02-16
PROJECT LEADER: M.A. COLGAN	DRAWN BY: JEB
DESIGNED BY: J BOOTH	CHECKED BY: M.J. SERVETAS
FEDERAL STREET	SHEET – OF –

Y:\13091-ST ALBANS\FEDERAL TO LOWER NEWTON\13091-6-TO LOWER NEWTON.dwg, 2/2/2016 8:46:02 AM

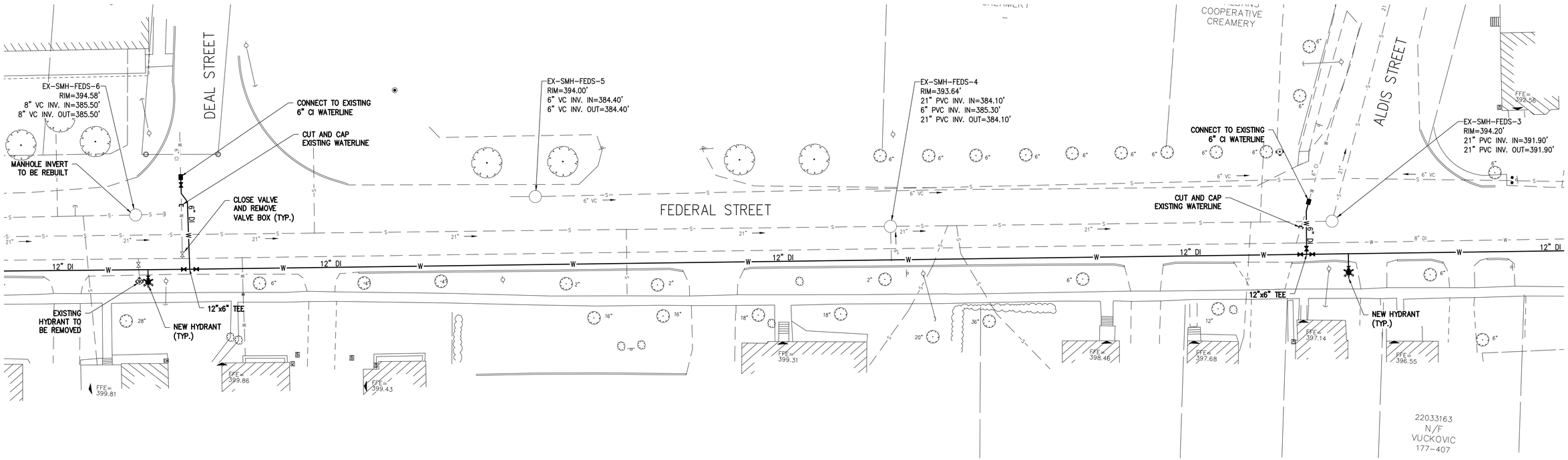

PLAN
SCALE: 1"=20'

GRAPHIC SCALE
0 20 30 40
(IN FEET)

PROJECT NAME: ST. ALBANS	
PROJECT NUMBER: HPP 8000(17)	
FILE NAME: 13091-ST ALBANS-ADDITIONAL	PLOT DATE: 02-02-16
PROJECT LEADER: M.A. COLGAN	DRAWN BY: JEB
DESIGNED BY: J BOOTH	CHECKED BY: M.J. SERVETAS
FEDERAL STREET	SHEET – OF –

Y:\13091-ST ALBANS\FEDERAL TO LOWER NEWTON\13091-7-TO LOWER NEWTON.dwg, 2/2/2016 8:50:18 AM

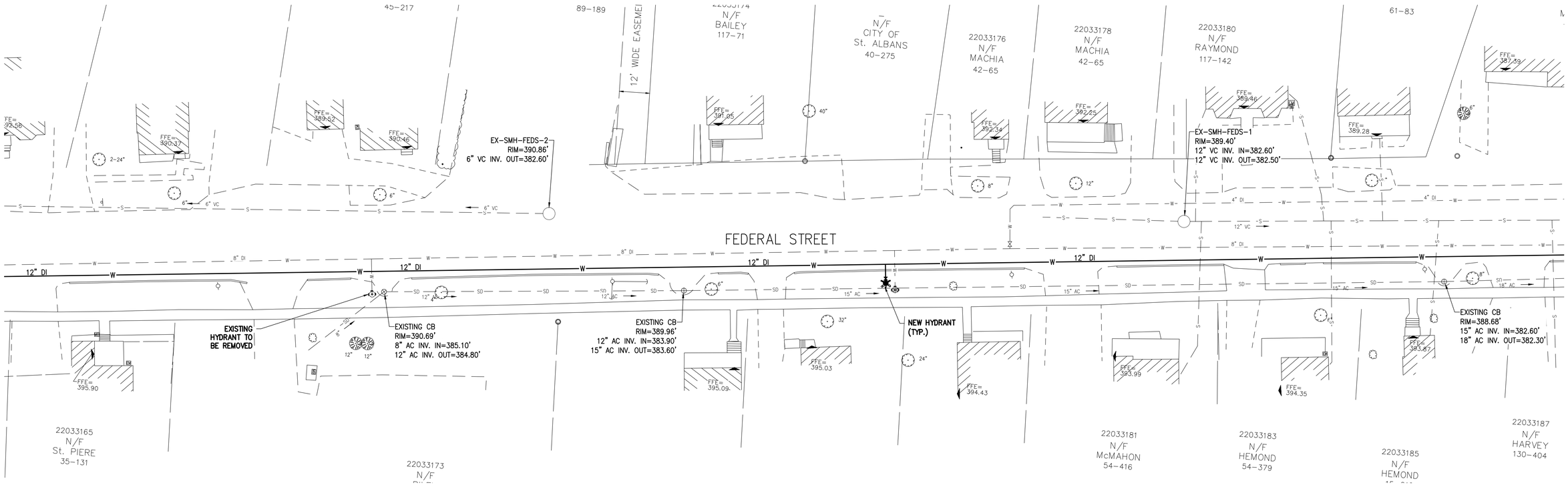

PLAN
SCALE: 1"=20'

GRAPHIC SCALE
0 20 30 40
(IN FEET)

PROJECT NAME: ST. ALBANS	
PROJECT NUMBER: HPP 8000(17)	
FILE NAME: 13091-ST ALBANS-ADDITIONAL	PLOT DATE: 02-02-16
PROJECT LEADER: M.A. COLGAN	DRAWN BY: JEB
DESIGNED BY: J BOOTH	CHECKED BY: M.J. SERVETAS
FEDERAL STREET	SHEET – OF –

Y:\13091-ST ALBANS\FEDERAL TO LOWER NEWTON\13091-8-TO LOWER NEWTON.dwg, 2/2/2016 8:52:54 AM

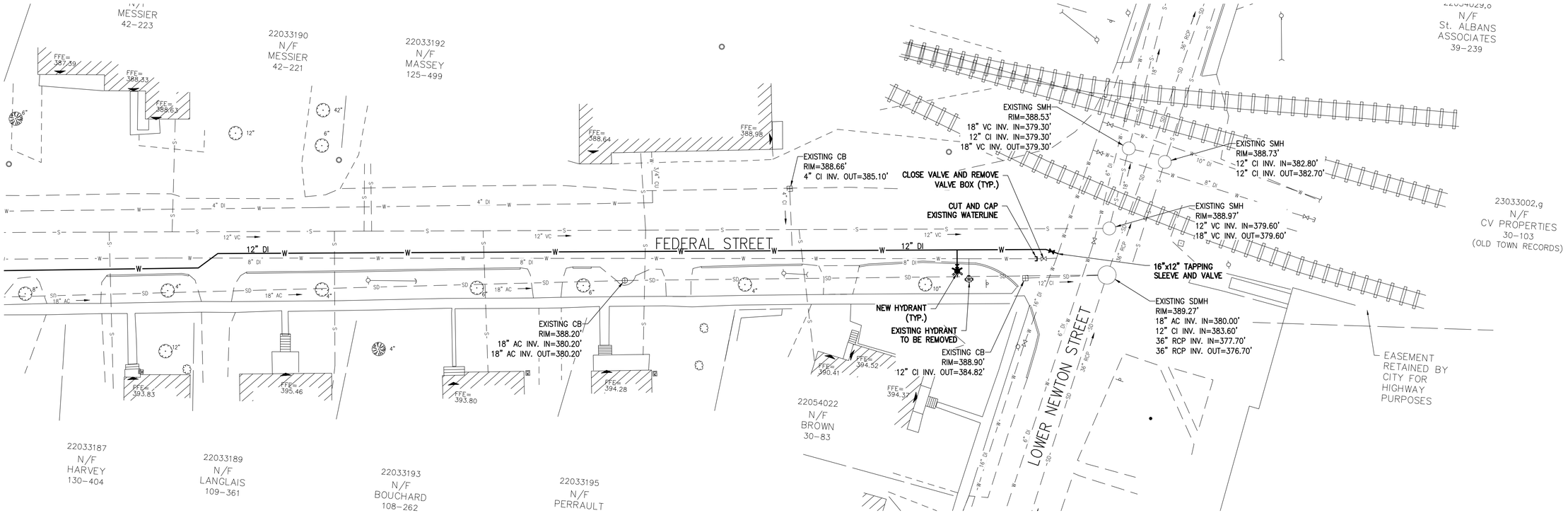

PLAN
SCALE: 1"=20'

GRAPHIC SCALE

0 20 30 40

(IN FEET)

PROJECT NAME: ST. ALBANS	
PROJECT NUMBER: HPP 8000(17)	
FILE NAME: 13091-ST ALBANS-ADDITIONAL	PLOT DATE: 02-02-16
PROJECT LEADER: M.A. COLGAN	DRAWN BY: JEB
DESIGNED BY: J BOOTH	CHECKED BY: M.J. SERVETAS
FEDERAL STREET	SHEET – OF –

Y:\13091-ST ALBANS\FEDERAL TO LOWER NEWTON\13091-9-TO LOWER NEWTON.dwg, 2/2/2016 8:57:57 AM

PLANT LIST

KEY	BOTANICAL NAME	COMMON NAME	QTY.	SIZE	REMARKS
TREES:					
AR	Acer rubrum 'Armstrong'	Red Maple	15	3-3.5" Cal.	B&B, 6' Branching Ht. (Min.)
BN	Betula nigra 'Heritage'	River Birch	3	12-15' Tall	B&B, Multi Stem
GB	Ginkgo Biloba 'Halka'	Halka Gingko	27	3-3.5" Cal.	B&B, 6' Branching Ht. (Min.)
MS	Malus 'Sargent'	Sargent Flowering Crab	14	2-2.5" Cal.	B&B, Full
PGa	Picea glauca	White Spruce	4	8-10'	B&B, Full
PGb	Picea glauca	White Spruce	23	6-7'	B&B, Full
QR	Quercus rubra	Northern Red Oak	28	3-3.5" Cal.	B&B, 6' Branching Ht. (Min.)
TC	Tilia cordata 'Greenspire'	Greenspire Linden	36	3-3.5" Cal.	B&B, 6' Branching Ht. (Min.)
UA	Ulmus americana 'Princeton'	Princeton American Elm	18	3-3.5" Cal.	B&B, 6' Branching Ht. (Min.)
SHRUBS:					
CS	Cornus sericea 'Arctic Fire'	Arctic Fire Red Dogwood	18	2'-2.5' ht.	C.G. Plant 36" o.c
HA	Hydrangea arborescens 'Annabelle'	Annabelle Hydrangea	31	24-30" dia.	C.G. Plant 36" o.c.
IJ	Ilex verticillata 'Jim Dandy'	Jim Dandy Winterberry	40	1.5'-2' ht.	C.G. Plant 36" o.c
IR	Ilex verticillata 'Red Sprite'	Red Sprite Winterberry	152	1.5'-2' ht.	C.G. Plant 36" o.c
PERENNIALS:					
CP	Carex pensylcania	Sedge	405	1 Gal.	C.G. Plant 18" o.c.
HS	Hemerocallis 'Stella Doro'	Stella Dora Daylily	390	1 Gal.	C.G. Plant 18" o.c.

NOTES:
1. CONTRACTOR IS RESPONSIBLE TO VERIFY ALL PLANT QUANTITIES FOUND IN THE PLANTING PLANS. IF ANY DISCREPANCIES ARE FOUND, RESIDENT ENGINEER SHOULD BE NOTIFIED IMMEDIATELY.
2. FINAL LAYOUT AND PLACEMENT OF ALL PLANT MATERIAL TO BE APPROVED BY THE RESIDENT ENGINEER.
3. CONTRACTOR IS RESPONSIBLE TO SEED ALL DISTURBED AREAS ACCORDING TO THE SPECIFICATIONS AND LAWN DETAIL
4. REFER TO PLANTING DETAILS DRAWING FOR PLANT MATERIAL INSTALLATION REQUIREMENTS.
5. IF THE LANDSCAPE CONTRACTOR PROPOSES A SUBSTITUTE PLANT SPECIES, ALL SUBSTITUTES NEED TO BE APPROVED BY THE RESIDENT ENGINEER IN WRITING PRIOR TO ORDERING.

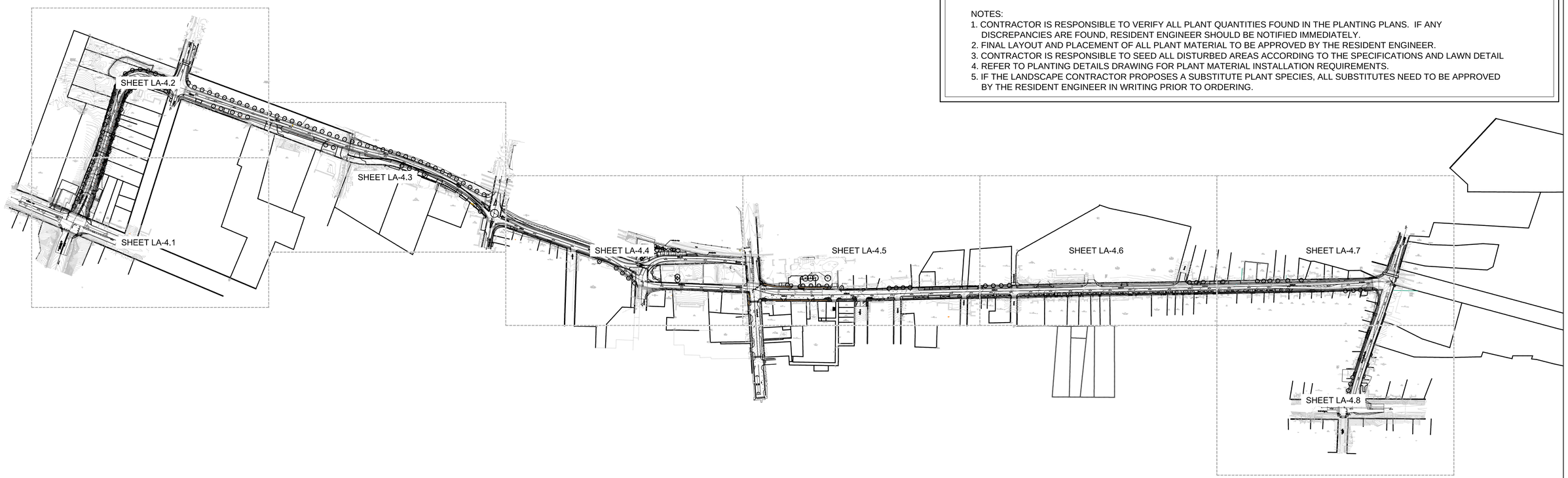

60% SUBMISSION

0 125' 250' 500'
Graphic Scale: 1"=250'-0"

SE GROUP
Landscape Architects
131 Church Street
Burlington, VT 05401
www.segroup.com

PROJECT NAME: ST. ALBANS
PROJECT NUMBER: HPP 8000(17)

FILE NAME:
PROJECT LEADER: MKW
DESIGNED BY: MKW
OVERALL PLANTING PLAN

PLOT DATE: 02/19/2016
DRAWN BY: MKW, TH
CHECKED BY:
SHEET LA-4.0

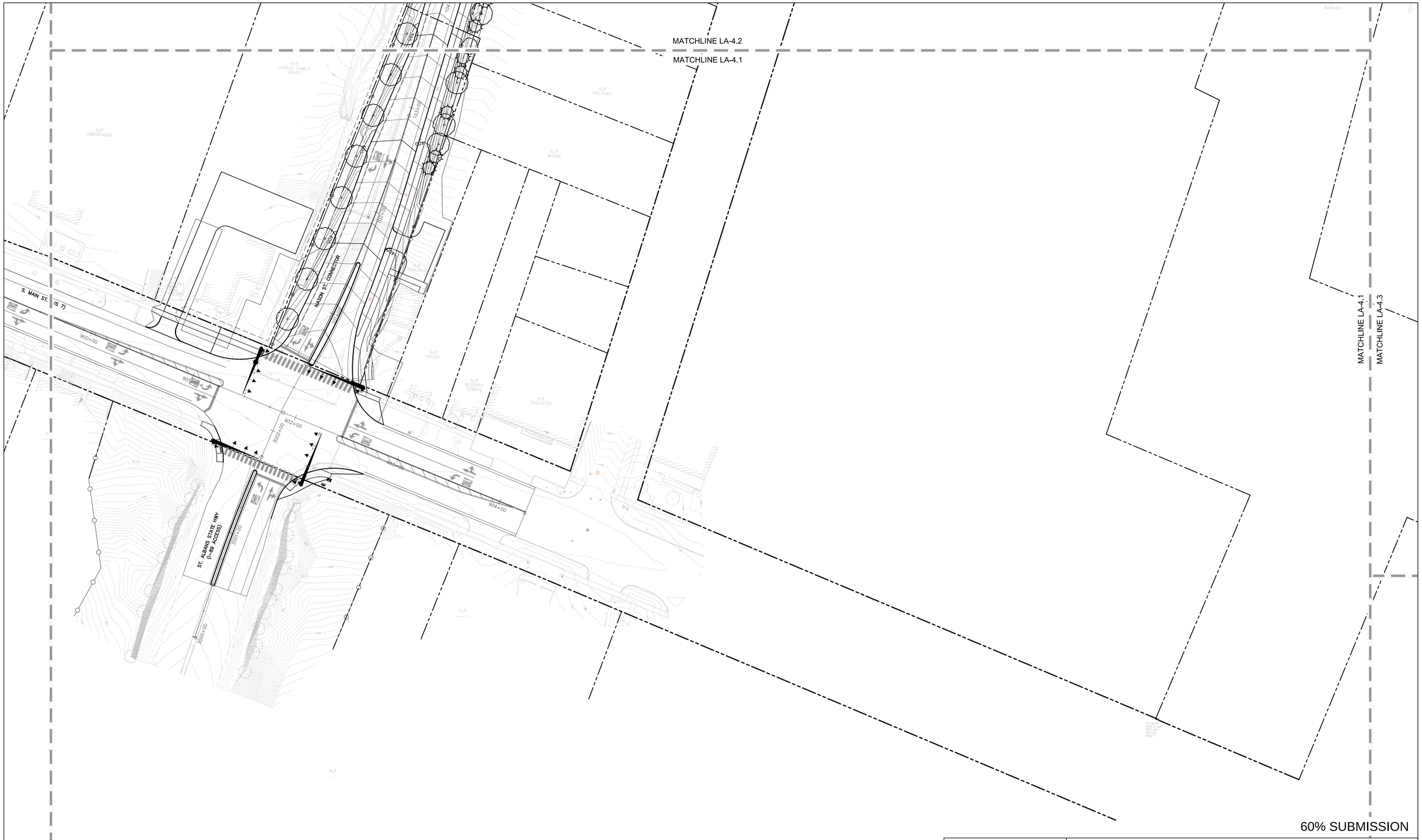

60% SUBMISSION

0 20' 40' 80'

Graphic Scale: 1"=40'-0"

SE GROUP

Landscape Architects
131 Church Street
Burlington, VT 05401
www.segroup.com

PROJECT NAME:	ST. ALBANS		
PROJECT NUMBER:	HPP 8000(17)		
FILE NAME:		PLOT DATE:	02/19/2016
PROJECT LEADER:	MKW	DRAWN BY:	MKW, TH
DESIGNED BY:	MKW	CHECKED BY:	
PLANTING PLAN		SHEET	LA-4.1

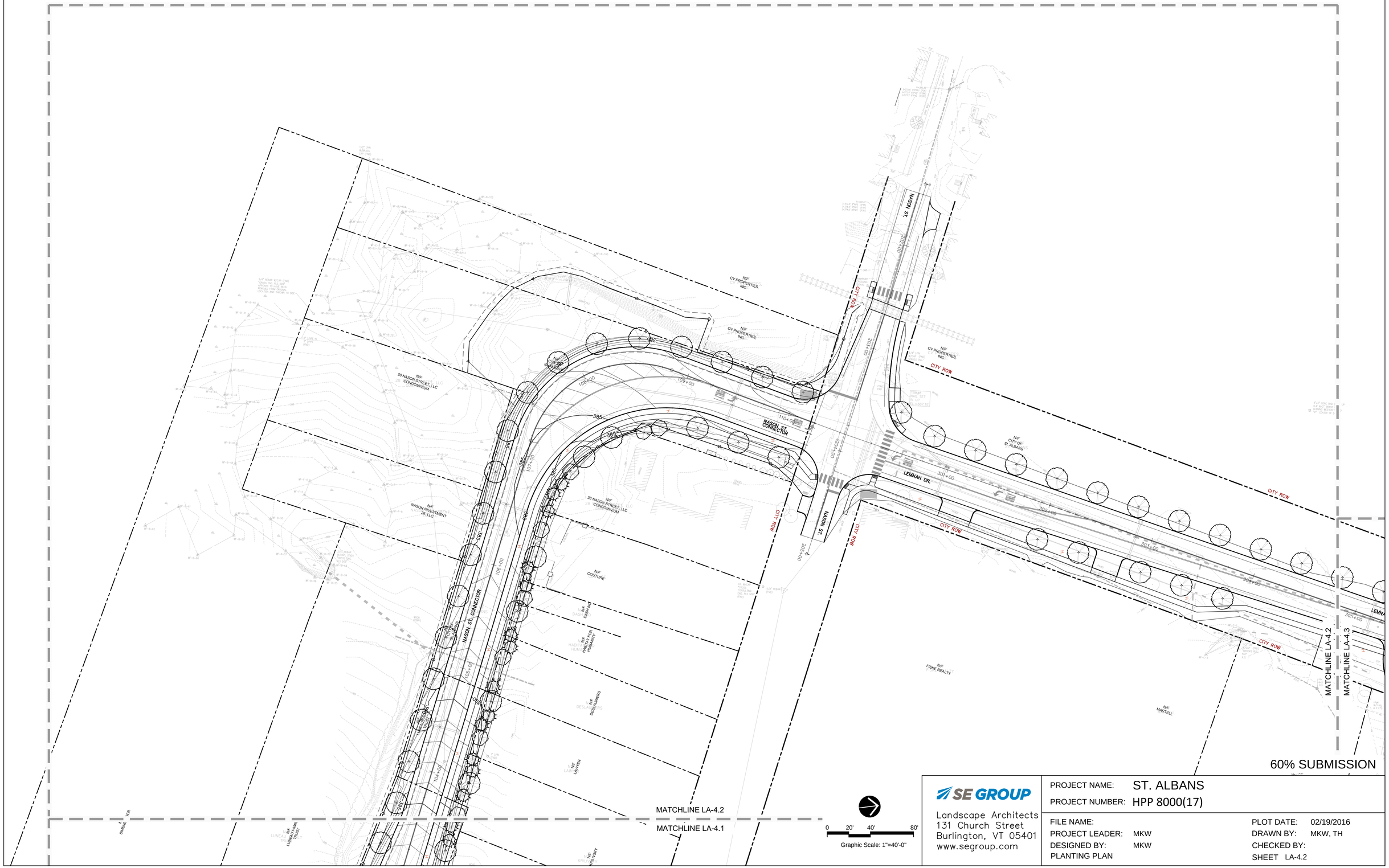

SE GROUP
Landscape Architects
131 Church Street
Burlington, VT 05401
www.segroup.com

PROJECT NAME:	ST. ALBANS		
PROJECT NUMBER:	HPP 8000(17)		
FILE NAME:		PLOT DATE:	02/19/2016
PROJECT LEADER:	MKW	DRAWN BY:	MKW, TH
DESIGNED BY:	MKW	CHECKED BY:	
PLANTING PLAN		SHEET	LA-4.2

SE GROUP
Landscape Architects
131 Church Street
Burlington, VT 05401
www.segroup.com

PROJECT NAME:	ST. ALBANS		
PROJECT NUMBER:	HPP 8000(17)		
FILE NAME:		PLOT DATE:	02/19/2016
PROJECT LEADER:	MKW	DRAWN BY:	MKW, TH
DESIGNED BY:	MKW	CHECKED BY:	
PLANTING PLAN		SHEET	LA-4.3

MATCHLINE LA-4.3

MATCHLINE LA-4.4

MATCHLINE LA-4.5

ALLEN ST.

MARKET ST.

CATHERINE ST.

STOWELL ST.

STEBBINS ST.

CITY ROW

CHAIN LINK FENCE

BEGIN NEW FENCE MATCH EXISTING

END NEW FENCE

GRAVEL DRIVE

PAVE LIMIT

EXISTING TREE TO REMAIN

EXISTING TREES TO REMAIN

N/F CV PROPERTIES, INC.

N/F CITY OF ST. ALBANS

N/F LABRIE

N/F GODIN

N/F BERTHIAUME

N/F BANK AMERICA

N/F LEWIS

N/F WILLARD MILL HOUSING LIMITED PARTNERSHIP

N/F B.A. GAGE, LLC

N/F BEVINS PROPERTY #3 LLC

N/F AMERICANADIAN, LLC

N/F LAPIERRE CONSTRUCTION & DEVELOPMENT

N/F BLOUIN

N/F WHITE

N/F ST. ALBANS HOTEL, INC.

NECR

60% SUBMISSION

0 20' 40' 80'

Graphic Scale: 1"=40'-0"

SE GROUP

Landscape Architects
131 Church Street
Burlington, VT 05401
www.segroup.com

PROJECT NAME:	ST. ALBANS		
PROJECT NUMBER:	HPP 8000(17)		
FILE NAME:		PLOT DATE:	02/19/2016
PROJECT LEADER:	MKW	DRAWN BY:	MKW, TH
DESIGNED BY:	MKW	CHECKED BY:	
PLANTING PLAN		SHEET	LA-4.4

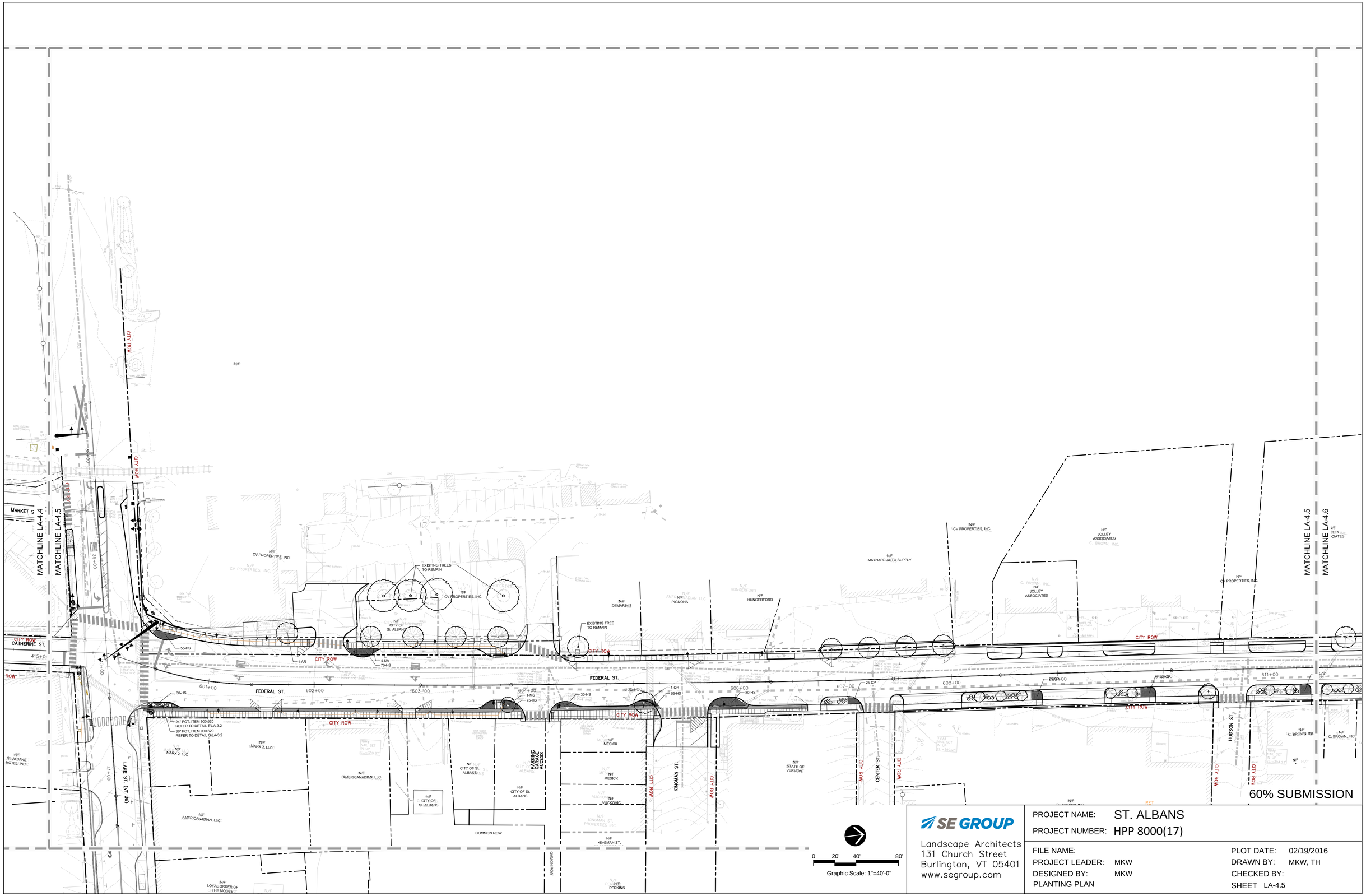

SE GROUP
Landscape Architects
131 Church Street
Burlington, VT 05401
www.segroup.com

PROJECT NAME: ST. ALBANS
PROJECT NUMBER: HPP 8000(17)

FILE NAME:
PROJECT LEADER: MKW
DESIGNED BY: MKW
PLANTING PLAN

PLOT DATE: 02/19/2016
DRAWN BY: MKW, TH
CHECKED BY:
SHEET LA-4.5

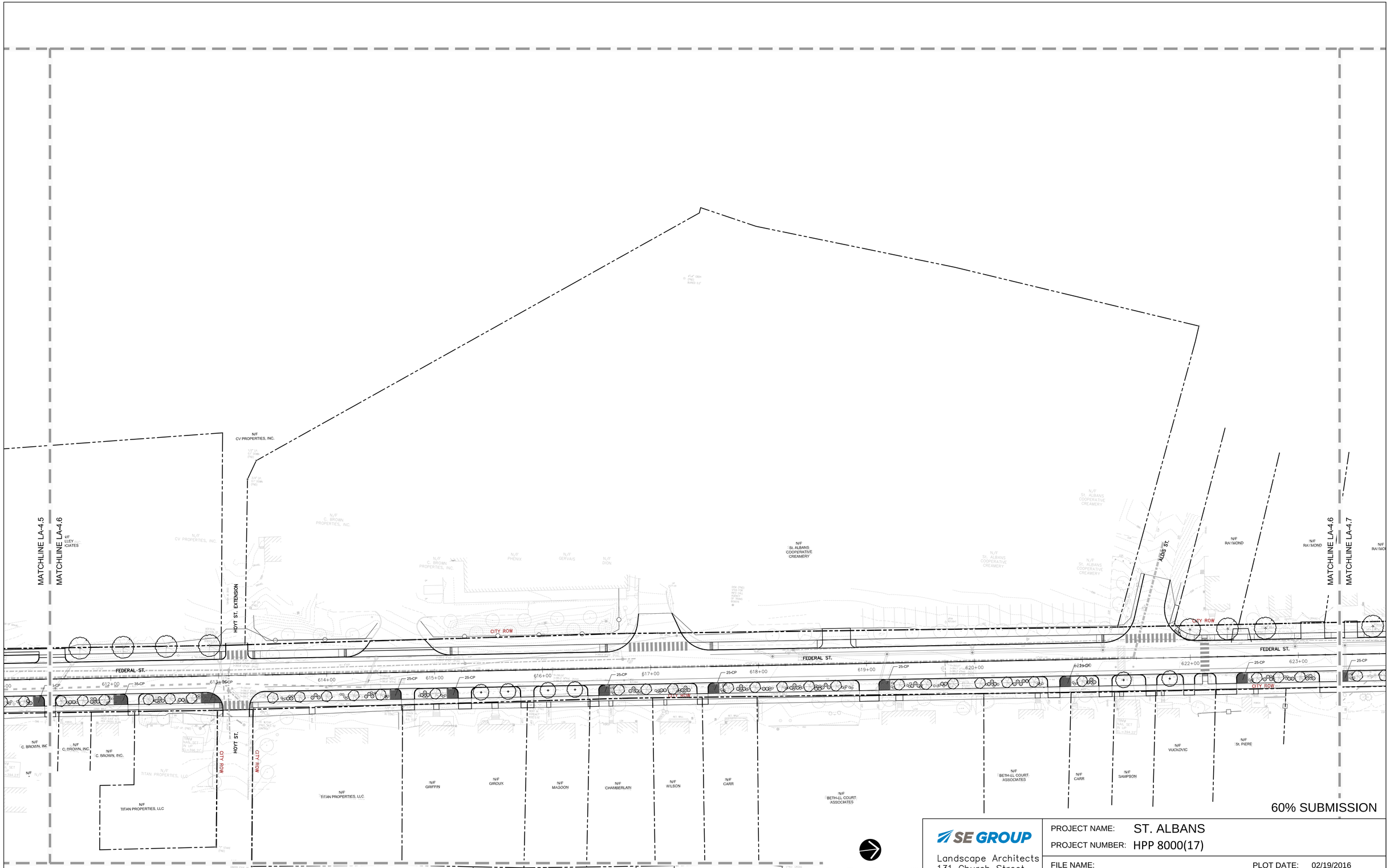

SE GROUP
Landscape Architects
131 Church Street
Burlington, VT 05401
www.segroup.com

PROJECT NAME: ST. ALBANS
PROJECT NUMBER: HPP 8000(17)

FILE NAME:
PROJECT LEADER: MKW
DESIGNED BY: MKW
PLANTING PLAN

PLOT DATE: 02/19/2016
DRAWN BY: MKW, TH
CHECKED BY:
SHEET LA-4.6

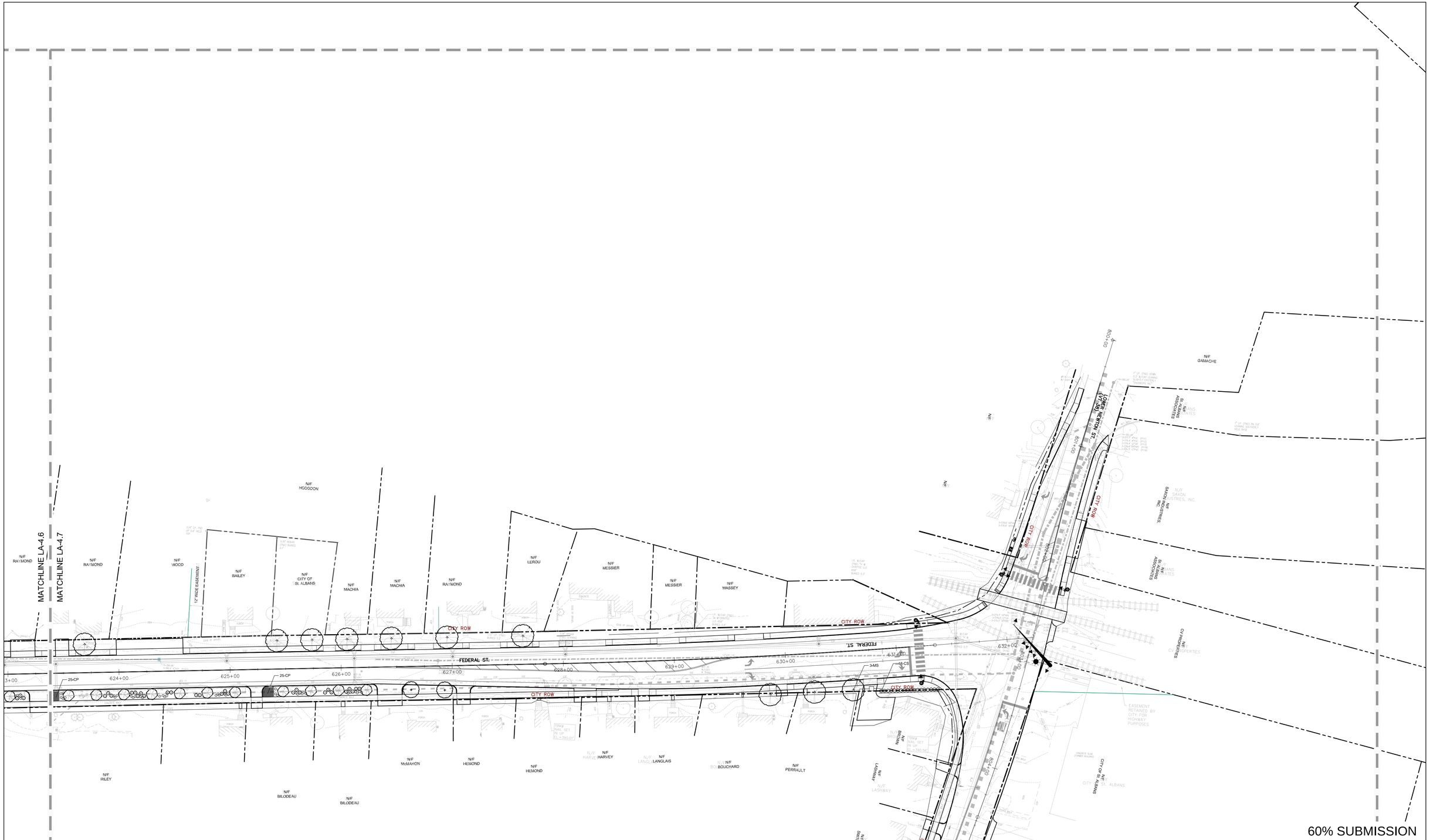

60% SUBMISSION

SE GROUP
Landscape Architects
131 Church Street
Burlington, VT 05401
www.segroup.com

PROJECT NAME:	ST. ALBANS		
PROJECT NUMBER:	HPP 8000(17)		
FILE NAME:		PLOT DATE:	02/19/2016
PROJECT LEADER:	MKW	DRAWN BY:	MKW, TH
DESIGNED BY:	MKW	CHECKED BY:	
PLANTING PLAN		SHEET	LA-4.7

MATCHLINE LA-4.7

MATCHLINE LA-4.8

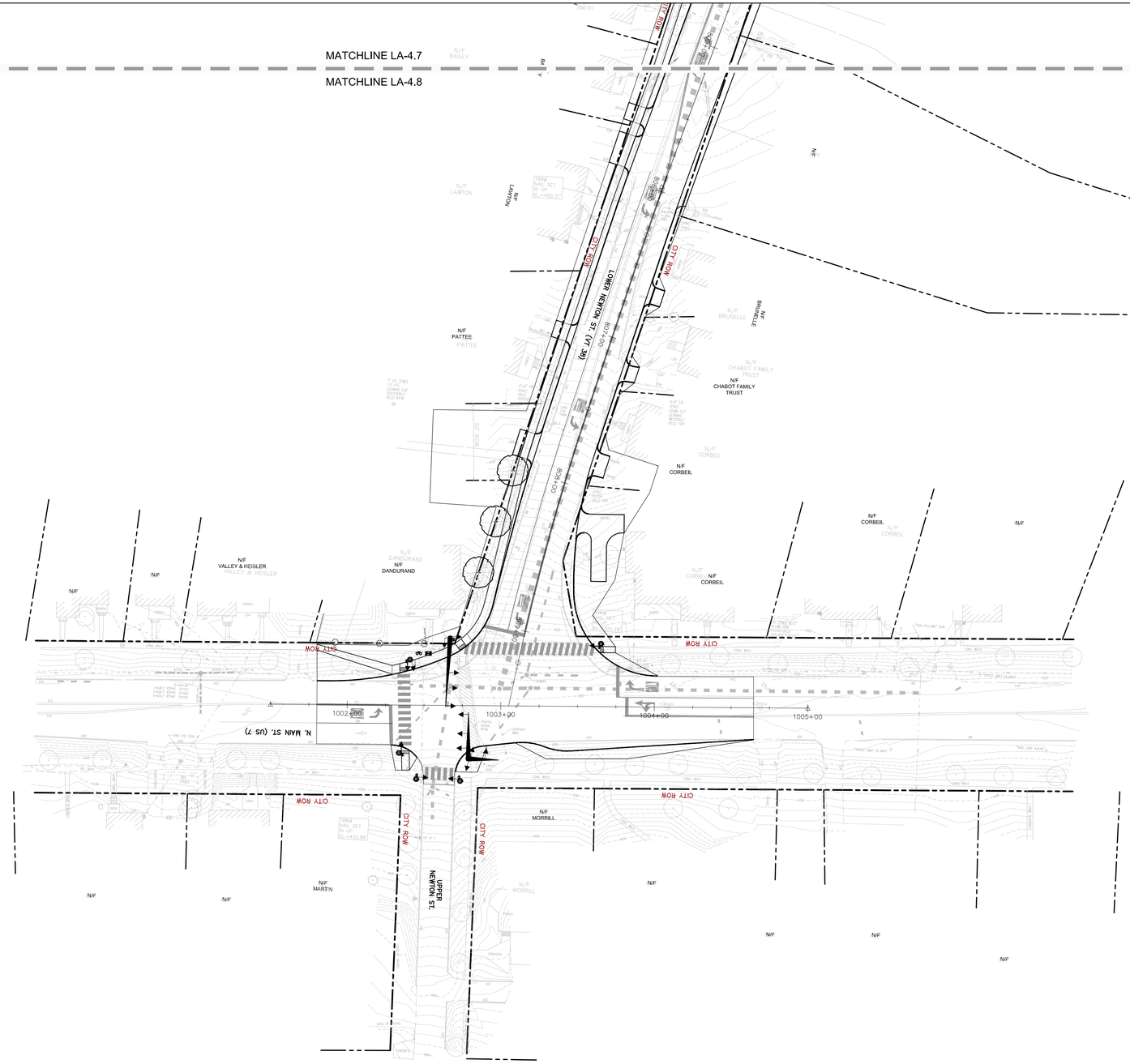

60% SUBMISSION

0 20' 40' 80'

Graphic Scale: 1"=40'-0"

SE GROUP

Landscape Architects
131 Church Street
Burlington, VT 05401
www.segroup.com

PROJECT NAME: ST. ALBANS

PROJECT NUMBER: HPP 8000(17)

FILE NAME:

PROJECT LEADER: MKW

DESIGNED BY: MKW

PLANTING PLAN

PLOT DATE: 02/19/2016

DRAWN BY: MKW, TH

CHECKED BY:

SHEET LA-4.8

SPACING "D"	ROW "A"	NUMBER OF PLANTS/SQ.FT.
36" O.C.	31.20"	0.125
30" O.C.	26.00"	0.180
24" O.C.	20.76"	0.281
12" O.C.	10.44"	1.125
10" O.C.	8.64"	1.660
8" O.C.	6.96"	2.600
6" O.C.	5.16"	4.610

NOTE:
1. PLANT QUANTITIES DETERMINED BY MULTIPLYING AREA (SQ. FT.) BY NUMBER OF PLANTS/SQ. FT. FOR REQUIRED SPACING.
2. CONTINUOUS PLANTING PITS FILLED WITH LANDSCAPE BACKFILL PER THE DEPTH AS NOTED IN THE SPECIFICATIONS IS REQUIRED.

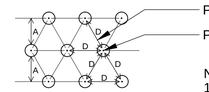

PLANT SPACING

PLANT CENTER

NOTES:
1. SEE PLANTING PLAN FOR SPACING AND QUANTITIES
2. SEE PLANTING LIST FOR PLANT SPACING

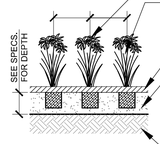

SET AT ORIGINAL PLANTING DEPTH

PERENNIALS, ITEM 656.41

HEMLOCK BARK MULCH, ITEM 900.608

CONTINUOUS PLANTING PIT BACKFILL MIX FOR PERENNIAL PLANTING BEDS, REFER TO SPECS S.P. SOIL PREPARATION 900.608 PAID UNDER LANDSCAPE BACKFILL, ITEM 900.608

SUB GRADE

C PERENNIAL PLANTING

SCALE: 1/2" = 1'-0" p-perennial.dwg

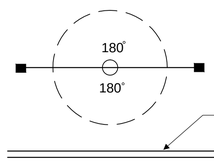

ALIGN STAKES PARALLEL W/ ROAD OR WALKS

EDGE OF WALK OR CURB

A. TREE STAKING ALONG ROAD OR WALKS

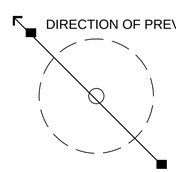

DIRECTION OF PREVAILING WIND

ALIGN STAKES PARALLEL W/ DIRECTION OF PREVAILING WIND. ALL STAKES TO BE CONSISTENT.

B. TREE STAKING IN OPEN SPACES

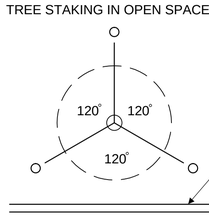

3" CALIPER TREES OR LARGER - ALIGN 2 STAKES PARALLEL W/ ROAD OR WALKS

EDGE OF WALK OR CURB

C. TREE GUYING

D TREE STAKING LAYOUT

INCIDENTAL TO DECIDUOUS TREES, ITEM 656.30

NO SCALE p-stake.dwg

NOTE: EXAMINE ENTIRE TREE AND REMOVE ALL NURSERY TAGS, ROPE, STRING, OR SURVEYORS TAPE TO PREVENT FUTURE GIRDLING.

SURROUNDING SOIL SHOULD NOT EXCEED 80% COMPACTION, DRAINAGE WILL BE REQUIRED IF COMPACTED SOILS ARE PRESENT

NYLON STRAP WITH 3/4" GROMMETS, REFER TO SPECIFICATIONS INCIDENTAL TO DECIDUOUS TREES, ITEM 656.30

FASTEN WIRE BELOW POINT OF MAJOR BRANCHING OR TO MAJOR OUTSIDE TRUNK.

2 ½" HARDWOOD STAKES. ALIGN STAKES PARALLEL W/ ROAD/ WALKS OR PARALLEL W/ DIRECTION OF PREVAILING WIND, REFER TO TREE STAKING DETAIL INCIDENTAL TO DECIDUOS TREES, ITEM 656.30

TEMPORARY WATERING BASIN MADE FROM SOIL

BREAK APART EDGE OF EXCAVATION W/ SHOVEL AND BLEND PLANT MIX W/ EXISTING SOIL TO PROVIDE TRANSITION TO UNDISTURBED GRADE

UNDISTURBED GRADE EXCAVATE ONLY TO SPECIFIED PLANTING DEPTH TO ENSURE STABLE BASE

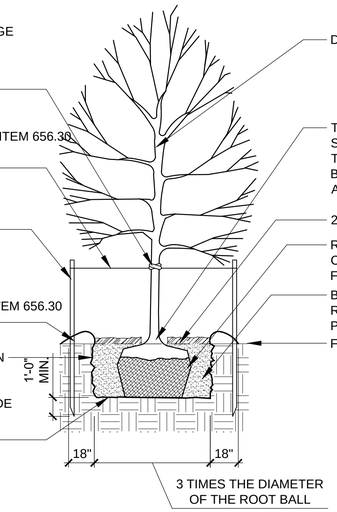

DECIDUOUS TREES, ITEM 656.30

TOP OF ROOTBALL, ROOT FLARE / MAIN ORDER ROOT SHOULD BE EVIDENT. IF ROOT FLARE IS NOT EVIDENT, THEN SCRAPE OFF THE TOP LAYER OF SOIL BUILD UP ON TOP OF ROOTBALL FROM NURSERY AND PLANT ROOTBALL AT PROPER DEPTH.

2" HEMLOCK BARK MULCH, ITEM 900.608

REMOVE TOP HALF OF WIRE CAGE CUT AND REMOVE BURLAP FROM ROOTBALL

BACKFILL MIX FOR TREE PLANTING BEDS, REFER TO SPECS S.P. SOIL PREPARATION 900.608 PAID UNDER LANDSCAPE BACKFILL, ITEM 900.608

FINISH GRADE

3 TIMES THE DIAMETER OF THE ROOT BALL

A TREE PLANTING

SCALE 1/4" = 1'-0" p-decidtree.dwg

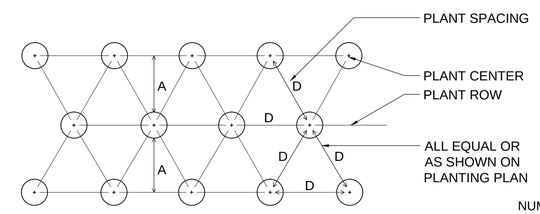

PLANT SPACING

PLANT CENTER

PLANT ROW

ALL EQUAL OR AS SHOWN ON PLANTING PLAN

SPACING "D"	ROW "A"	NUMBER OF PLANTS/SQ. FT.
5' O.C.	51.96"	0.04
4' O.C.	41.52"	0.07
36" O.C.	31.20"	0.12
30" O.C.	26.00"	0.18
24" O.C.	20.76"	0.28

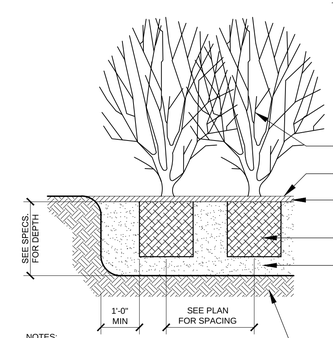

SHRUBS, ITEM 656.35

FINISH GRADE

HEMLOCK BARK MULCH, ITEM 900.608 REFER TO SPECIFICATIONS

SHRUB ROOTBALL

CONTINUOUS PLANTING PIT BACKFILL MIX FOR SHRUB PLANTING BEDS, REFER TO SPECS S.P. SOIL PREPARATION 900.608 PAID UNDER LANDSCAPE BACKFILL, ITEM 900.608

SUB GRADE

NOTES:
1. QUANTITY OF SHRUBS AND SPACING AS NOTED IN PLANTING SCHEDULE.
2. CONTINUOUS PLANTING PITS FILLED WITH PLANTING MIX PER THE DEPTH AS NOTED IN THE SPECIFICATIONS IS REQUIRED.

B SHRUB PLANTING

SCALE: 1/2" = 1'-0"

60% SUBMISSION

SE GROUP
Landscape Architects
131 Church Street
Burlington, VT 05401
www.segroup.com

PROJECT NAME: ST. ALBANS
PROJECT NUMBER: HPP 8000(17)

FILE NAME:
PROJECT LEADER: MKW
DESIGNED BY: MKW
LANDSCAPE PLANTING DETAILS

PLOT DATE: 02/19/2016
DRAWN BY: MKW, TH
CHECKED BY:
SHEET LA-4.9

FIXTURE AND POLE SPECIFICATIONS

Fixture A -ORNAMENTAL STREET LIGHT Configuration: Single Fixture Quantity: 17	
Fixture B - (**The non ornamental LED**) Configuration: xxx Quantity: xxx	

NOTES:
1. CONTRACTOR IS RESPONSIBLE TO VERIFY ALL LIGHT FIXTURE AND POLE QUANTITIES FOUND IN THE LIGHTING PLANS. IF ANY DISCREPANCIES ARE FOUND, RESIDENT ENGINEER SHOULD BE NOTIFIED IMMEDIATELY.
2. FIXTURE A - REFER TO SPECIAL PROVISIONS "ORNAMENTAL STREET LIGHT" FOR SPECIFICATIONS.
3. FIXTURE B - REFER TO SPECIAL PROVISIONS xxxxxx
4. REFER TO LIGHT FIXTURE DETAILS ON LA-5.1-5.2 FOR FIXTURE AND POLE CONFIGURATIONS WITH BANNER ARMS AND PLANT HANGERS.
5. CONTRACTOR TO PROVIDE SHOP DRAWINGS FOR REVIEW AND APPROVAL BY RESIDENT ENGINEER.
6. REFER TO GENERAL PLANS BY VHB FOR LIGHTING CONDUIT LAYOUT, AND DETAILS BY ALDRICH AND ELLIOT FOR POWER SUPPLY DETAILS.

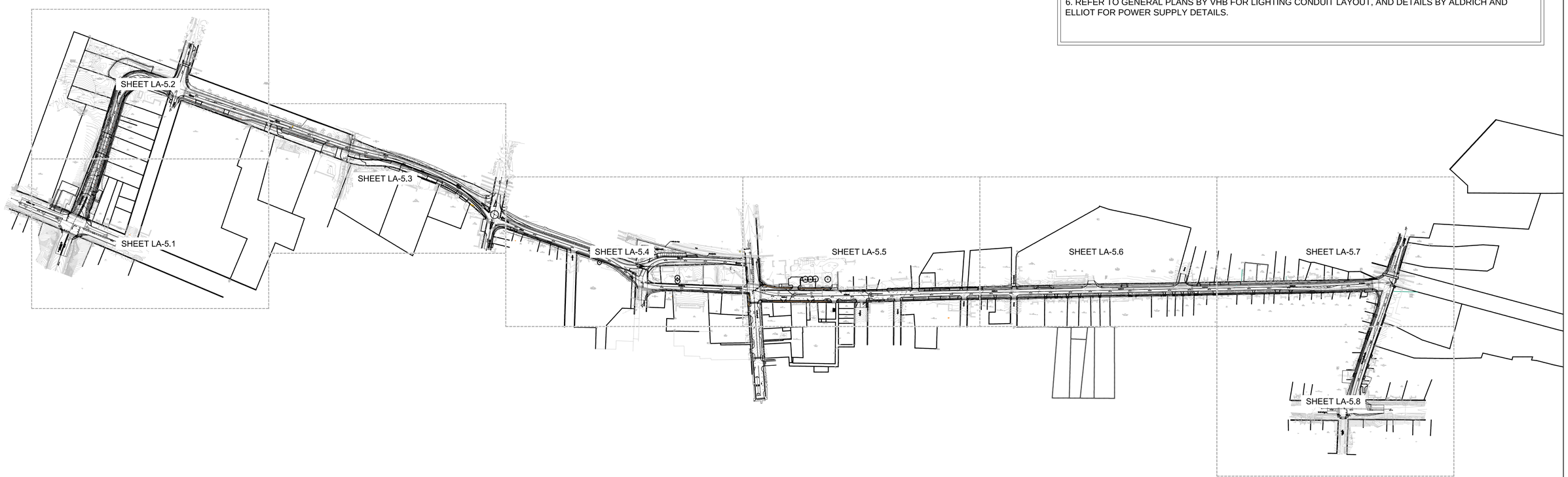

60% SUBMISSION

0 125' 250' 500'
Graphic Scale: 1"=250'-0"

SE GROUP
Landscape Architects
131 Church Street
Burlington, VT 05401
www.segroup.com

PROJECT NAME: ST. ALBANS
PROJECT NUMBER: HPP 8000(17)

FILE NAME:
PROJECT LEADER: MKW
DESIGNED BY: MKW
OVERALL LIGHTING PLAN

PLOT DATE: 02/19/2016
DRAWN BY: MKW, TH
CHECKED BY:
SHEET LA-5.0

0 20' 40' 80'

Graphic Scale: 1"=40'-0"

FIXTURE AND POLE SPECIFICATIONS

Fixture A -ORNAMENTAL STREET LIGHT

Configuration:	Single Fixture
Quantity:	17

Fixture B - (**The non ornamental LED**)

Configuration:	xxx
Quantity:	xxx

NOTES:
1. CONTRACTOR IS RESPONSIBLE TO VERIFY ALL LIGHT FIXTURE AND POLE QUANTITIES FOUND IN THE LIGHTING PLANS. IF ANY DISCREPANCIES ARE FOUND, RESIDENT ENGINEER SHOULD BE NOTIFIED IMMEDIATELY.
2. FIXTURE A - REFER TO SPECIAL PROVISIONS "ORNAMENTAL STREET LIGHT" FOR SPECIFICATIONS.
3. FIXTURE B - REFER TO SPECIAL PROVISIONS xxxxxx
4. REFER TO LIGHT FIXTURE DETAILS ON LA-5.1-5.2 FOR FIXTURE AND POLE CONFIGURATIONS WITH BANNER ARMS AND PLANT HANGERS.
5. CONTRACTOR TO PROVIDE SHOP DRAWINGS FOR REVIEW AND APPROVAL BY RESIDENT ENGINEER.
6. REFER TO GENERAL PLANS BY VHB FOR LIGHTING CONDUIT LAYOUT, AND DETAILS BY ALDRICH AND ELLIOT FOR POWER SUPPLY DETAILS.

60% SUBMISSION

SE GROUP
Landscape Architects
131 Church Street
Burlington, VT 05401
www.segroup.com

PROJECT NAME: ST. ALBANS
PROJECT NUMBER: HPP 8000(17)

FILE NAME:
PROJECT LEADER: MKW
DESIGNED BY: MKW
LIGHTING PLAN

PLOT DATE: 02/19/2016
DRAWN BY: MKW, TH
CHECKED BY:
SHEET LA-5.1

FIXTURE AND POLE SPECIFICATIONS

Fixture A -ORNAMENTAL STREET LIGHT Configuration: Single Fixture Quantity: 17	
Fixture B - (**The non ornamental LED**) Configuration: xxx Quantity: xxx	

NOTES:
1. CONTRACTOR IS RESPONSIBLE TO VERIFY ALL LIGHT FIXTURE AND POLE QUANTITIES FOUND IN THE LIGHTING PLANS. IF ANY DISCREPANCIES ARE FOUND, RESIDENT ENGINEER SHOULD BE NOTIFIED IMMEDIATELY.
2. FIXTURE A - REFER TO SPECIAL PROVISIONS "ORNAMENTAL STREET LIGHT" FOR SPECIFICATIONS.
3. FIXTURE B - REFER TO SPECIAL PROVISIONS xxxxxx
4. REFER TO LIGHT FIXTURE DETAILS ON LA-5.1-5.2 FOR FIXTURE AND POLE CONFIGURATIONS WITH BANNER ARMS AND PLANT HANGERS.
5. CONTRACTOR TO PROVIDE SHOP DRAWINGS FOR REVIEW AND APPROVAL BY RESIDENT ENGINEER.
6. REFER TO GENERAL PLANS BY VHB FOR LIGHTING CONDUIT LAYOUT, AND DETAILS BY ALDRICH AND ELLIOT FOR POWER SUPPLY DETAILS.

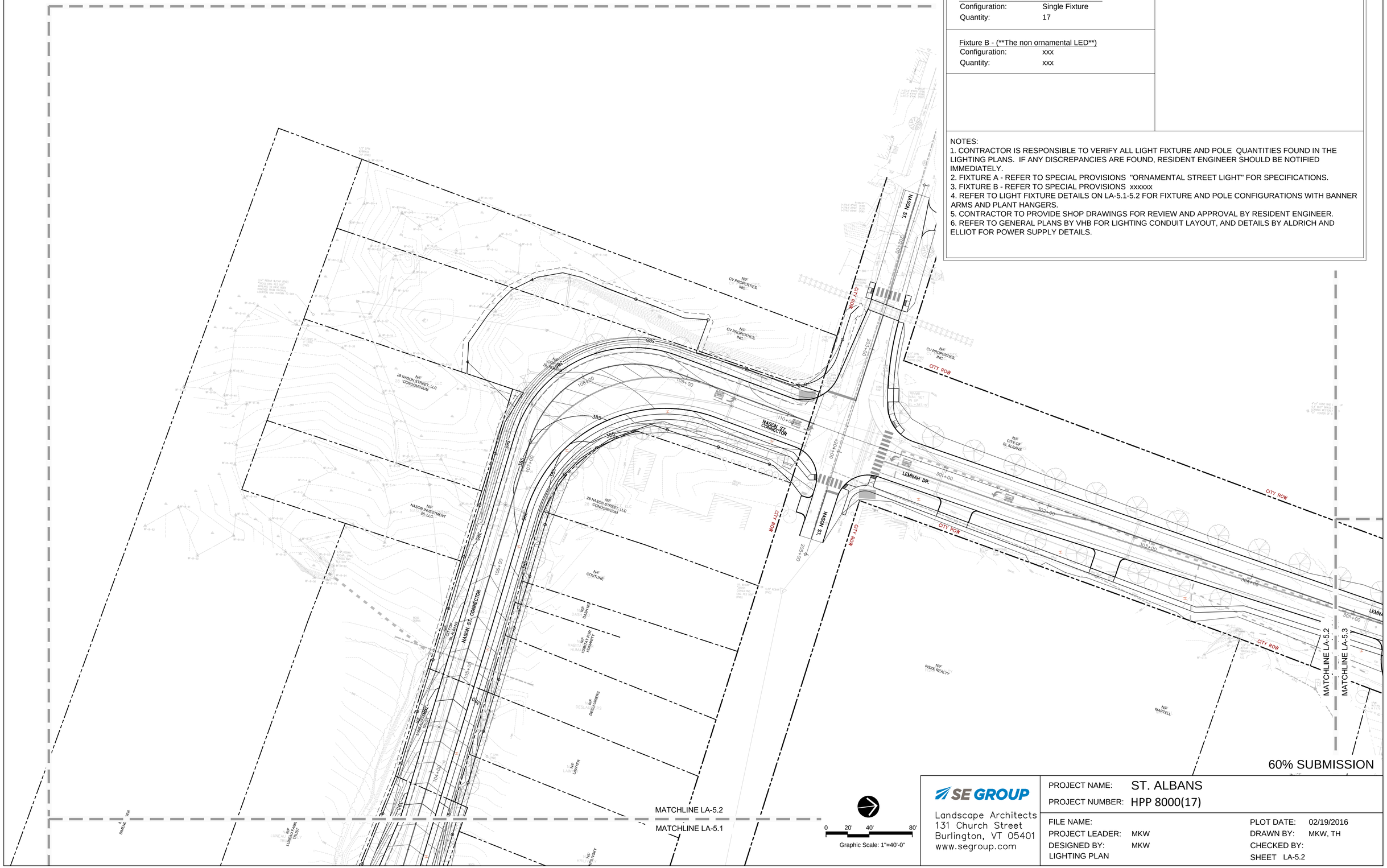

SE GROUP
Landscape Architects
131 Church Street
Burlington, VT 05401
www.segroup.com

PROJECT NAME:	ST. ALBANS		
PROJECT NUMBER:	HPP 8000(17)		
FILE NAME:		PLOT DATE:	02/19/2016
PROJECT LEADER:	MKW	DRAWN BY:	MKW, TH
DESIGNED BY:	MKW	CHECKED BY:	
LIGHTING PLAN		SHEET	LA-5.2

FIXTURE AND POLE SPECIFICATIONS

Fixture A -ORNAMENTAL STREET LIGHT Configuration: Single Fixture Quantity: 17	
Fixture B - (**The non ornamental LED**) Configuration: xxx Quantity: xxx	

NOTES:
1. CONTRACTOR IS RESPONSIBLE TO VERIFY ALL LIGHT FIXTURE AND POLE QUANTITIES FOUND IN THE LIGHTING PLANS. IF ANY DISCREPANCIES ARE FOUND, RESIDENT ENGINEER SHOULD BE NOTIFIED IMMEDIATELY.
2. FIXTURE A - REFER TO SPECIAL PROVISIONS "ORNAMENTAL STREET LIGHT" FOR SPECIFICATIONS.
3. FIXTURE B - REFER TO SPECIAL PROVISIONS xxxxxx
4. REFER TO LIGHT FIXTURE DETAILS ON LA-5.1-5.2 FOR FIXTURE AND POLE CONFIGURATIONS WITH BANNER ARMS AND PLANT HANGERS.
5. CONTRACTOR TO PROVIDE SHOP DRAWINGS FOR REVIEW AND APPROVAL BY RESIDENT ENGINEER.
6. REFER TO GENERAL PLANS BY VHB FOR LIGHTING CONDUIT LAYOUT, AND DETAILS BY ALDRICH AND ELLIOT FOR POWER SUPPLY DETAILS.

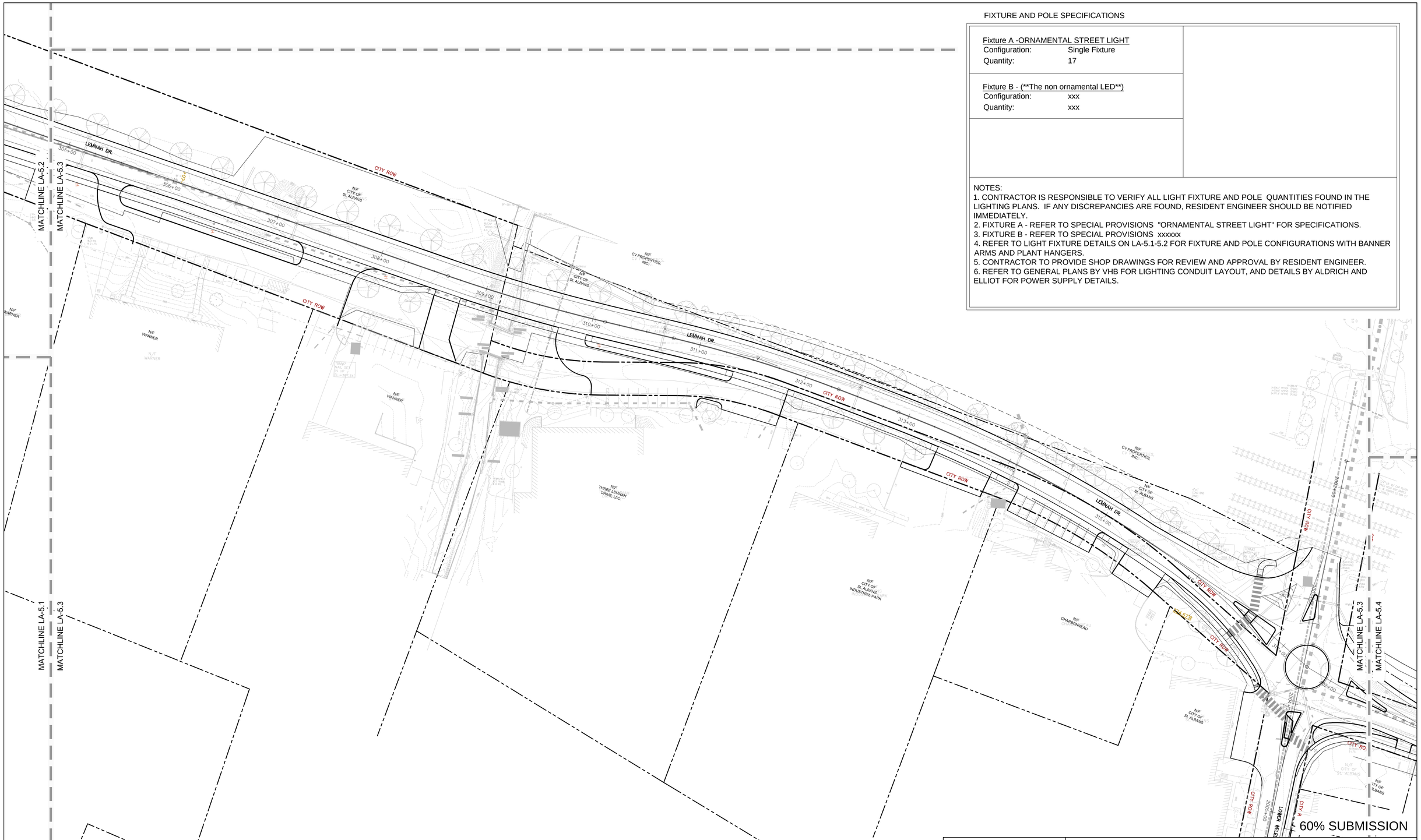

0 20' 40' 80'
Graphic Scale: 1"=40'-0"

SE GROUP
Landscape Architects
131 Church Street
Burlington, VT 05401
www.segroup.com

PROJECT NAME:	ST. ALBANS		
PROJECT NUMBER:	HPP 8000(17)		
FILE NAME:		PLOT DATE:	02/19/2016
PROJECT LEADER:	MKW	DRAWN BY:	MKW, TH
DESIGNED BY:	MKW	CHECKED BY:	
LIGHTING PLAN		SHEET	LA-5.3

FIXTURE AND POLE SPECIFICATIONS

Fixture A -ORNAMENTAL STREET LIGHT Configuration: Single Fixture Quantity: 17	
Fixture B - (**The non ornamental LED**) Configuration: xxx Quantity: xxx	

NOTES:
1. CONTRACTOR IS RESPONSIBLE TO VERIFY ALL LIGHT FIXTURE AND POLE QUANTITIES FOUND IN THE LIGHTING PLANS. IF ANY DISCREPANCIES ARE FOUND, RESIDENT ENGINEER SHOULD BE NOTIFIED IMMEDIATELY.
2. FIXTURE A - REFER TO SPECIAL PROVISIONS "ORNAMENTAL STREET LIGHT" FOR SPECIFICATIONS.
3. FIXTURE B - REFER TO SPECIAL PROVISIONS xxxxxx
4. REFER TO LIGHT FIXTURE DETAILS ON LA-5.1-5.2 FOR FIXTURE AND POLE CONFIGURATIONS WITH BANNER ARMS AND PLANT HANGERS.
5. CONTRACTOR TO PROVIDE SHOP DRAWINGS FOR REVIEW AND APPROVAL BY RESIDENT ENGINEER.
6. REFER TO GENERAL PLANS BY VHB FOR LIGHTING CONDUIT LAYOUT, AND DETAILS BY ALDRICH AND ELLIOT FOR POWER SUPPLY DETAILS.

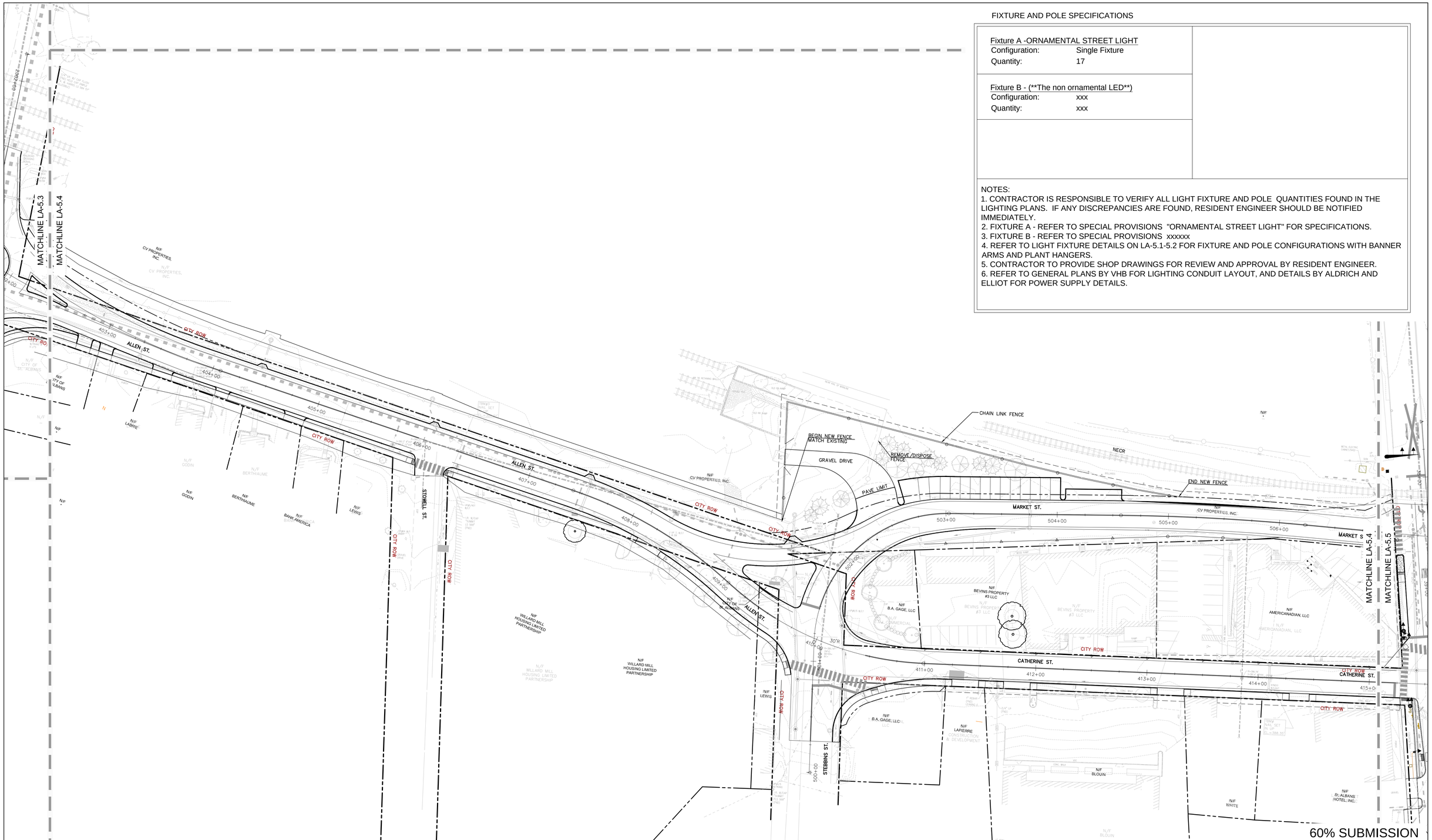

0 20' 40' 80'
Graphic Scale: 1"=40'-0"

SE GROUP
Landscape Architects
131 Church Street
Burlington, VT 05401
www.segroup.com

PROJECT NAME: ST. ALBANS
PROJECT NUMBER: HPP 8000(17)

FILE NAME:
PROJECT LEADER: MKW
DESIGNED BY: MKW
LIGHTING PLAN

PLOT DATE: 02/19/2016
DRAWN BY: MKW, TH
CHECKED BY:
SHEET LA-5.4

FIXTURE AND POLE SPECIFICATIONS

Fixture A -ORNAMENTAL STREET LIGHT Configuration: Single Fixture Quantity: 17	
Fixture B - (**The non ornamental LED**) Configuration: xxx Quantity: xxx	

NOTES:
1. CONTRACTOR IS RESPONSIBLE TO VERIFY ALL LIGHT FIXTURE AND POLE QUANTITIES FOUND IN THE LIGHTING PLANS. IF ANY DISCREPANCIES ARE FOUND, RESIDENT ENGINEER SHOULD BE NOTIFIED IMMEDIATELY.
2. FIXTURE A - REFER TO SPECIAL PROVISIONS "ORNAMENTAL STREET LIGHT" FOR SPECIFICATIONS.
3. FIXTURE B - REFER TO SPECIAL PROVISIONS xxxxxx
4. REFER TO LIGHT FIXTURE DETAILS ON LA-5.1-5.2 FOR FIXTURE AND POLE CONFIGURATIONS WITH BANNER ARMS AND PLANT HANGERS.
5. CONTRACTOR TO PROVIDE SHOP DRAWINGS FOR REVIEW AND APPROVAL BY RESIDENT ENGINEER.
6. REFER TO GENERAL PLANS BY VHB FOR LIGHTING CONDUIT LAYOUT, AND DETAILS BY ALDRICH AND ELLIOT FOR POWER SUPPLY DETAILS.

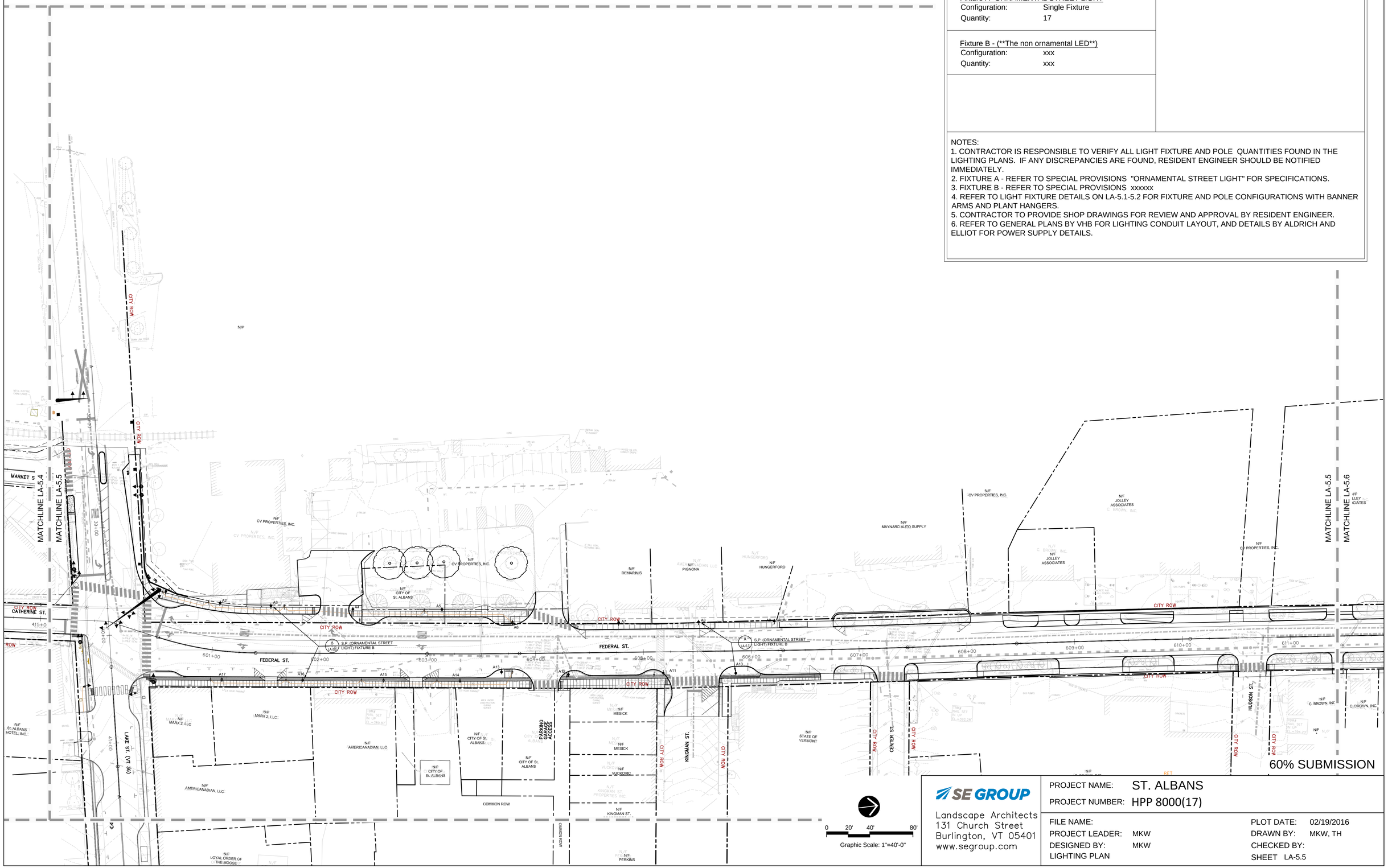

SE GROUP
Landscape Architects
131 Church Street
Burlington, VT 05401
www.segroup.com

PROJECT NAME: ST. ALBANS
PROJECT NUMBER: HPP 8000(17)

FILE NAME:
PROJECT LEADER: MKW
DESIGNED BY: MKW
LIGHTING PLAN

PLOT DATE: 02/19/2016
DRAWN BY: MKW, TH
CHECKED BY:
SHEET LA-5.5

FIXTURE AND POLE SPECIFICATIONS

Fixture A -ORNAMENTAL STREET LIGHT Configuration: Single Fixture Quantity: 17	
Fixture B - (**The non ornamental LED**) Configuration: xxx Quantity: xxx	

NOTES:
1. CONTRACTOR IS RESPONSIBLE TO VERIFY ALL LIGHT FIXTURE AND POLE QUANTITIES FOUND IN THE LIGHTING PLANS. IF ANY DISCREPANCIES ARE FOUND, RESIDENT ENGINEER SHOULD BE NOTIFIED IMMEDIATELY.
2. FIXTURE A - REFER TO SPECIAL PROVISIONS "ORNAMENTAL STREET LIGHT" FOR SPECIFICATIONS.
3. FIXTURE B - REFER TO SPECIAL PROVISIONS xxxxxx
4. REFER TO LIGHT FIXTURE DETAILS ON LA-5.1-5.2 FOR FIXTURE AND POLE CONFIGURATIONS WITH BANNER ARMS AND PLANT HANGERS.
5. CONTRACTOR TO PROVIDE SHOP DRAWINGS FOR REVIEW AND APPROVAL BY RESIDENT ENGINEER.
6. REFER TO GENERAL PLANS BY VHB FOR LIGHTING CONDUIT LAYOUT, AND DETAILS BY ALDRICH AND ELLIOT FOR POWER SUPPLY DETAILS.

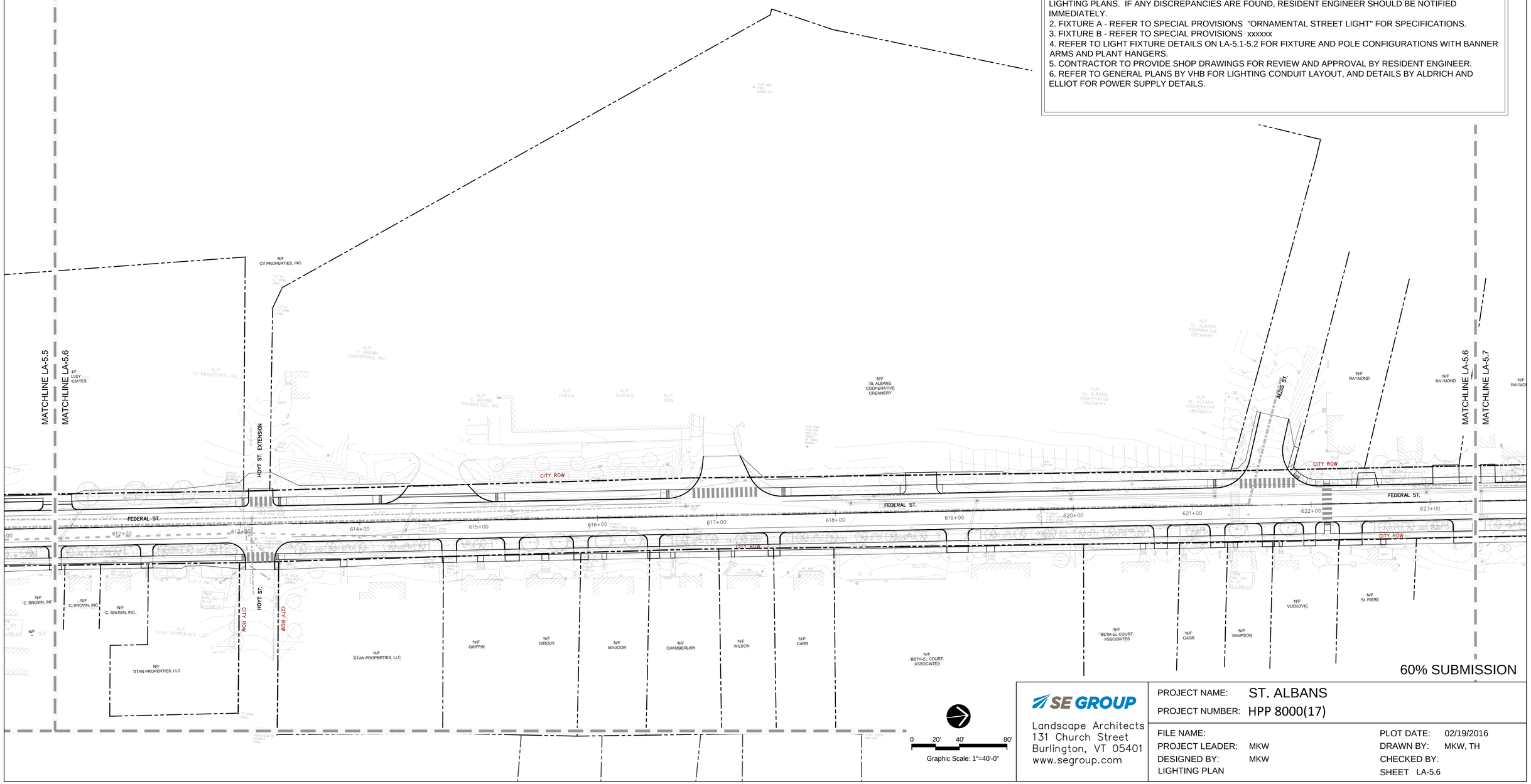

60% SUBMISSION

SE GROUP
Landscape Architects
131 Church Street
Burlington, VT 05401
www.segroup.com

PROJECT NAME: ST. ALBANS
PROJECT NUMBER: HPP 8000(17)

FILE NAME:
PROJECT LEADER: MKW
DESIGNED BY: MKW
LIGHTING PLAN

PLOT DATE: 02/19/2016
DRAWN BY: MKW, TH
CHECKED BY:
SHEET LA-5.6

FIXTURE AND POLE SPECIFICATIONS

Fixture A -ORNAMENTAL STREET LIGHT	
Configuration:	Single Fixture
Quantity:	17
Fixture B - (**The non ornamental LED**)	
Configuration:	xxx
Quantity:	xxx

NOTES:
1. CONTRACTOR IS RESPONSIBLE TO VERIFY ALL LIGHT FIXTURE AND POLE QUANTITIES FOUND IN THE LIGHTING PLANS. IF ANY DISCREPANCIES ARE FOUND, RESIDENT ENGINEER SHOULD BE NOTIFIED IMMEDIATELY.
2. FIXTURE A - REFER TO SPECIAL PROVISIONS "ORNAMENTAL STREET LIGHT" FOR SPECIFICATIONS.
3. FIXTURE B - REFER TO SPECIAL PROVISIONS xxxxxx
4. REFER TO LIGHT FIXTURE DETAILS ON LA-5.1-5.2 FOR FIXTURE AND POLE CONFIGURATIONS WITH BANNER ARMS AND PLANT HANGERS.
5. CONTRACTOR TO PROVIDE SHOP DRAWINGS FOR REVIEW AND APPROVAL BY RESIDENT ENGINEER.
6. REFER TO GENERAL PLANS BY VHB FOR LIGHTING CONDUIT LAYOUT, AND DETAILS BY ALDRICH AND ELLIOT FOR POWER SUPPLY DETAILS.

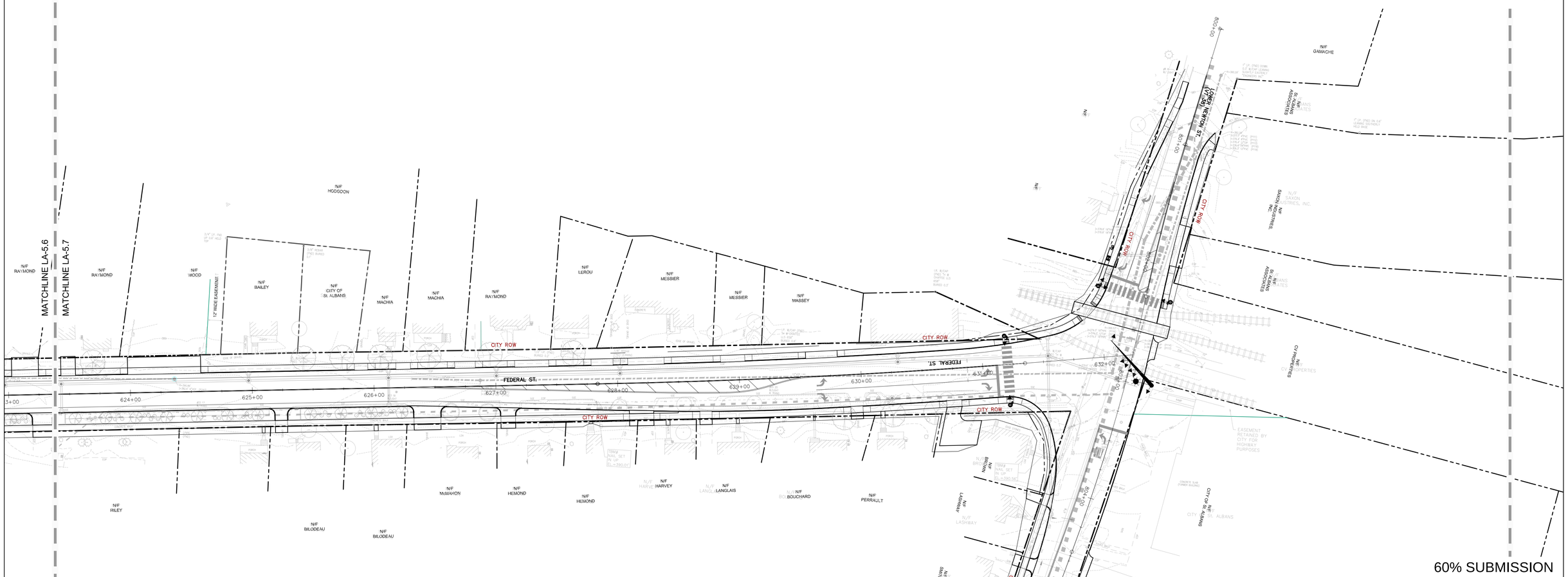

60% SUBMISSION

SE GROUP
Landscape Architects
131 Church Street
Burlington, VT 05401
www.segroup.com

PROJECT NAME:	ST. ALBANS		
PROJECT NUMBER:	HPP 8000(17)		
FILE NAME:		PLOT DATE:	02/19/2016
PROJECT LEADER:	MKW	DRAWN BY:	MKW, TH
DESIGNED BY:	MKW	CHECKED BY:	
LIGHTING PLAN		SHEET	LA-5.7

MATCHLINE LA-5.7

MATCHLINE LA-5.8

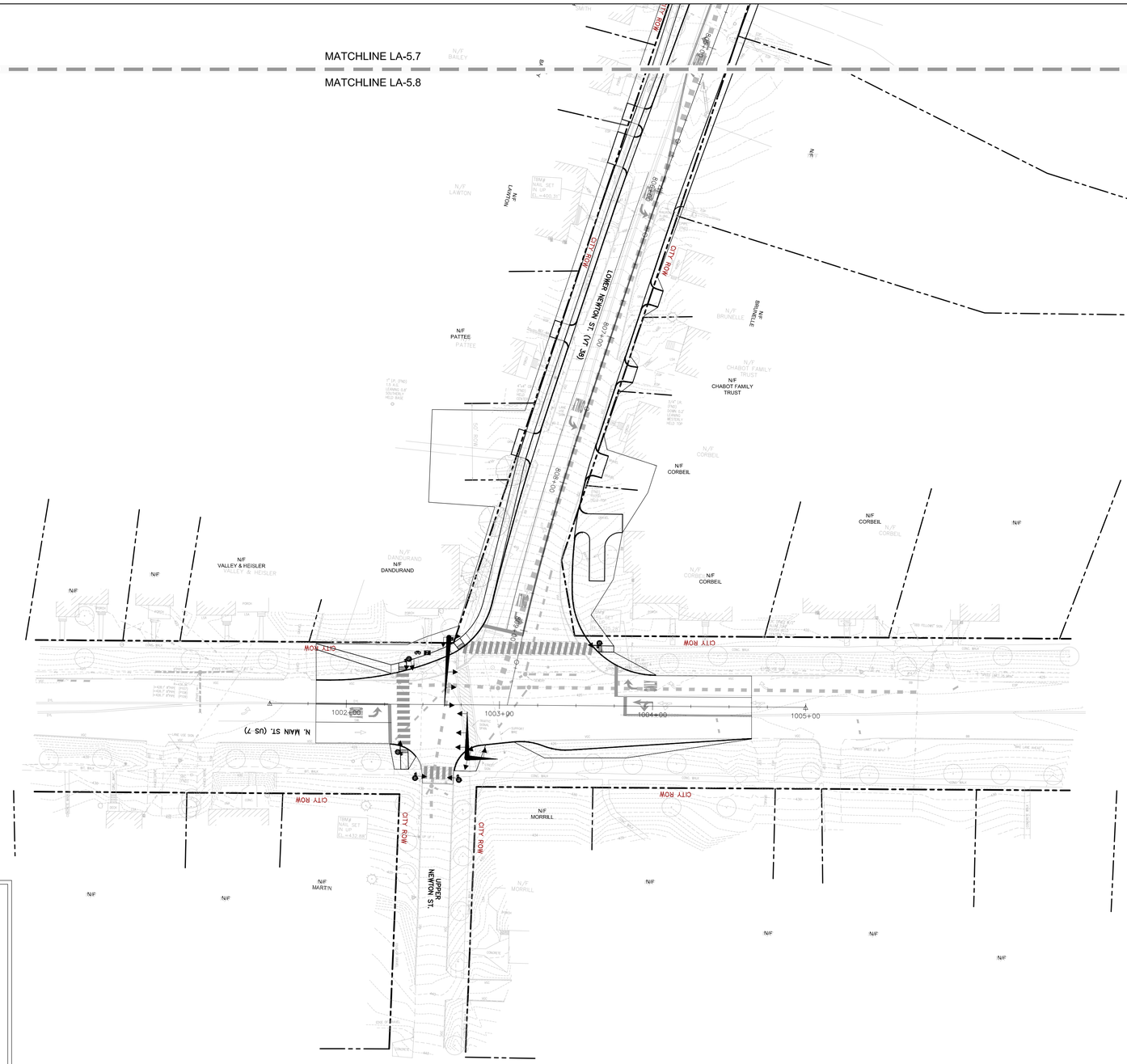

FIXTURE AND POLE SPECIFICATIONS

Fixture A -ORNAMENTAL STREET LIGHT Configuration: Single Fixture Quantity: 17	
Fixture B - (**The non ornamental LED**) Configuration: xxx Quantity: xxx	

NOTES:
1. CONTRACTOR IS RESPONSIBLE TO VERIFY ALL LIGHT FIXTURE AND POLE QUANTITIES FOUND IN THE LIGHTING PLANS. IF ANY DISCREPANCIES ARE FOUND, RESIDENT ENGINEER SHOULD BE NOTIFIED IMMEDIATELY.
2. FIXTURE A - REFER TO SPECIAL PROVISIONS "ORNAMENTAL STREET LIGHT" FOR SPECIFICATIONS.
3. FIXTURE B - REFER TO SPECIAL PROVISIONS xxxxxx
4. REFER TO LIGHT FIXTURE DETAILS ON LA-5.1-5.2 FOR FIXTURE AND POLE CONFIGURATIONS WITH BANNER ARMS AND PLANT HANGERS.
5. CONTRACTOR TO PROVIDE SHOP DRAWINGS FOR REVIEW AND APPROVAL BY RESIDENT ENGINEER.
6. REFER TO GENERAL PLANS BY VHB FOR LIGHTING CONDUIT LAYOUT, AND DETAILS BY ALDRICH AND ELLIOT FOR POWER SUPPLY DETAILS.

0 20' 40' 80'

Graphic Scale: 1"=40'-0"

60% SUBMISSION

SE GROUP
Landscape Architects
131 Church Street
Burlington, VT 05401
www.segroup.com

PROJECT NAME: ST. ALBANS

PROJECT NUMBER: HPP 8000(17)

FILE NAME:

PROJECT LEADER: MKW

DESIGNED BY: MKW

LIGHTING PLAN

PLOT DATE: 02/19/2016

DRAWN BY: MKW, TH

CHECKED BY:

SHEET LA-5.8

NOTES:
1. POLE BASE IS TO BE ONE CONTINUOUS POUR.
2. THE CONTRACTOR WILL TAKE SPECIAL CARE TO INSURE CONCRETE POLE BASES ARE INSTALLED ABSOLUTELY VERTICAL AND LEVEL.
3. REFER TO SITE PLAN AND LIGHT POLE BASE LAYOUT DETAILS FOR PROPER HORIZONTAL LAYOUT OF THE POLE BASES WITH THE BRICK PAVING BANDS AND SURROUNDING PAVEMENT SURFACES AND CURBING.
4. CONTRACTOR TO REVIEW LIGHT POLE BASE LAYOUT DETAILS FOR PROPER HORIZONTAL LAYOUT WITH BRICK PAVING AND ASSOCIATED HARDSCAPE.

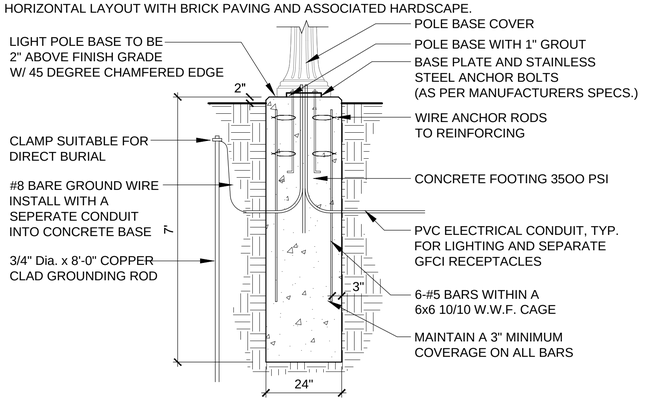

PAID UNDER:
LIGHT POLE BASE, ITEM 679.21

B LIGHT POLE BASE

SCALE 1/2" = 1'-0"

d-24 Flush-footing.dwg

NOTES:
1. CONTRACTOR IS TO TAKE SPECIAL CARE WHEN SETTING THE LIGHT POLES BASES TO ENSURE THE BASES LINE UP PROPERLY WITH THE BRICK PAVING PATTERN IN THE SIDE WALK. MISALIGNED POLE BASES WILL NOT BE ACCEPTED.
2. WHEN LIGHT POLE BASE IS LOCATED IN A LANDSCAPE BED OR LAWN AREA, , CENTER OF LIGHT POLE BASE SHOULD BE 42" FROM OUTSIDE FACE OF CURB, UNLESS OTHERWISE NOTED ON THE PLANS.

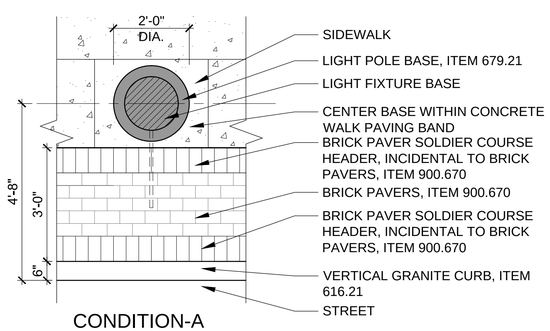

CONDITION-A

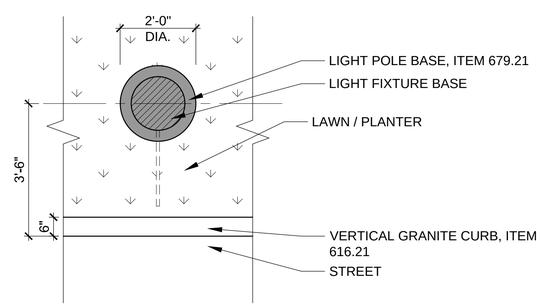

CONDITION-B
(In lawn or planter areas)

C LIGHT POLE BASE LAYOUT

SCALE 1/2" = 1'-0"

d-light pole base layout.dwg

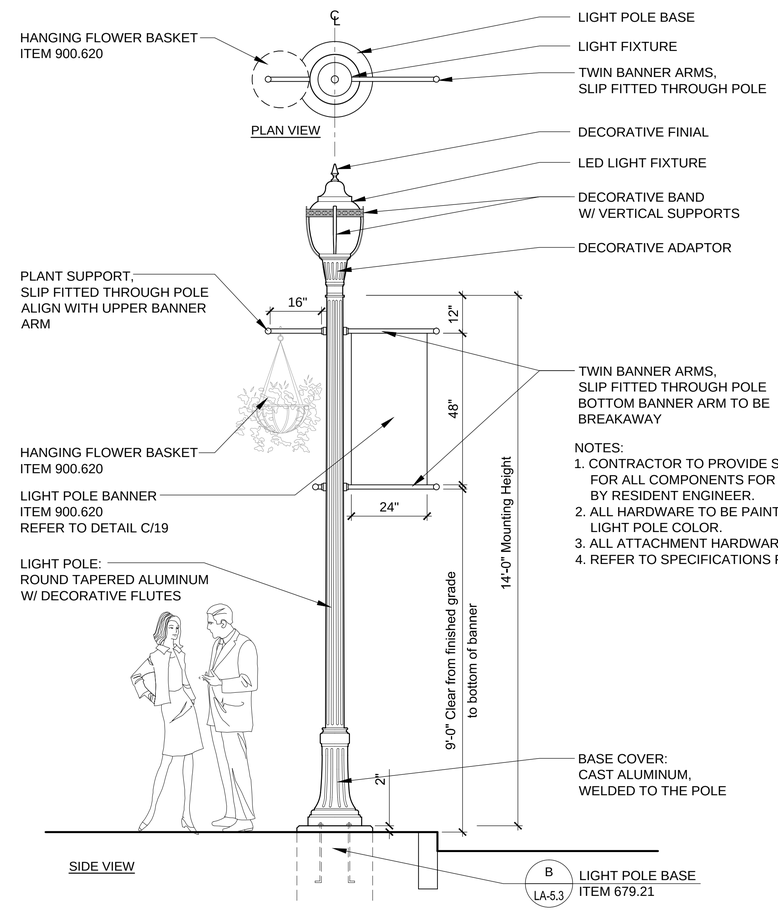

NOTES:
1. CONTRACTOR TO PROVIDE SHOP DRAWINGS FOR ALL COMPONENTS FOR REVIEW AND APPROVAL BY RESIDENT ENGINEER.
2. ALL HARDWARE TO BE PAINTED TO MATCH THE LIGHT POLE COLOR.
3. ALL ATTACHMENT HARDWARE SHALL BE STAINLESS STEEL.
4. REFER TO SPECIFICATIONS FOR DETAILED INFORMATION.

A SPECIAL PROVISION (ORNAMENTAL STREET LIGHT - FIXTURE A)

SCALE 1/2" = 1'-0"

d-light fixture - fixture A.dwg

60% SUBMISSION

SE GROUP
Landscape Architects
131 Church Street
Burlington, VT 05401
www.segroup.com

PROJECT NAME: ST. ALBANS
PROJECT NUMBER: HPP 8000(17)

FILE NAME:		PLOT DATE:	02/19/2016
PROJECT LEADER:	MKW	DRAWN BY:	MKW, TH
DESIGNED BY:	MKW	CHECKED BY:	
LANDSCAPE LIGHTING DETAILS		SHEET	LA-5.3

CITY OF SAINT ALBANS

SAINT ALBANS
Vermont

COUNTY OF FRANKLIN
PROPOSED IMPROVEMENTS

INDEX OF SHEETS

1 TITLE SHEET
2 TYPICAL SECTIONS
3 LAYOUT PLAN
4 STREETSCAPE AND PAVEMENT MARKING PLAN
5 PROFILE
6-7 KINGMAN STREET CROSS SECTIONS
8 FEDERAL STREET CROSS SECTIONS

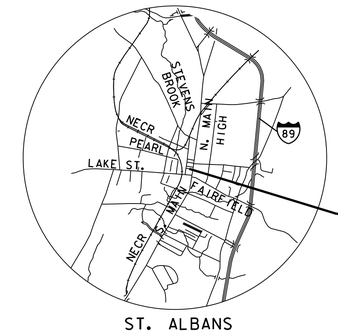

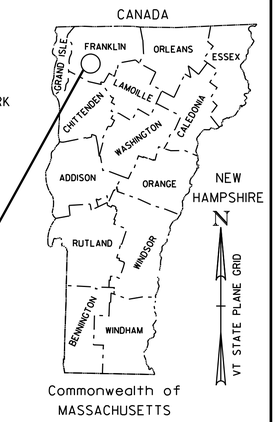

ST. ALBANS TAP TA15(3)

A MINOR URBAN ARTERIAL BEGINNING AT THE FEDERAL STREET AND KINGMAN STREET INTERSECTION, AND EXTENDING EASTERLY ALONG KINGMAN STREET FOR APPROXIMATELY 520 FEET TO THE NORTH MAIN STREET (US 7) INTERSECTION.

LENGTH OF PROJECT: 520 FT = 0.098 MILES

PROJECT DESCRIPTION

WORK TO BE PERFORMED UNDER THIS PROJECT INCLUDES FULL DEPTH RECONSTRUCTION OF KINGMAN STREET, NEW CURBING AND SIDEWALK, UTILITY INFRASTRUCTURE IMPROVEMENTS (SEWER, WATER AND DRAINAGE), STREETSCAPE ENHANCEMENTS TO INCLUDE NEW STREET LIGHTING AND LANDSCAPING, AS WELL AS NEW SIGNING AND STRIPING.

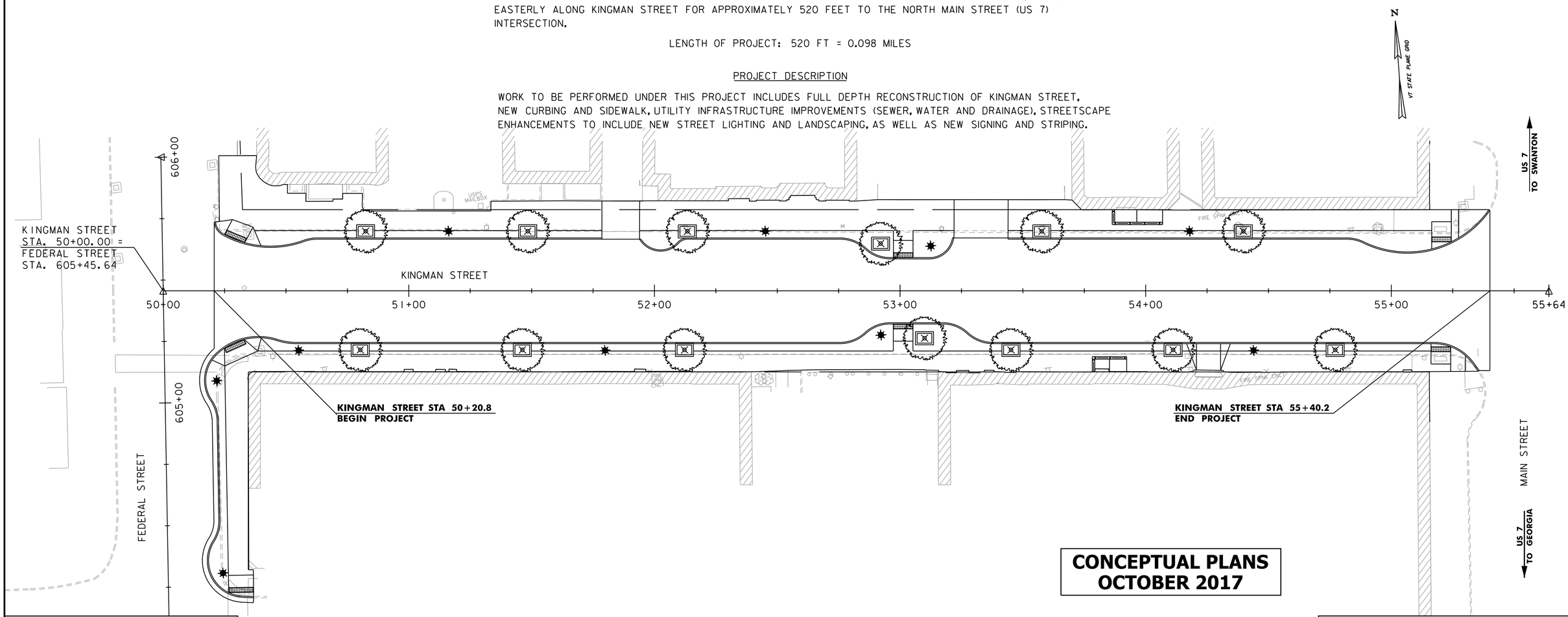

CONCEPTUAL PLANS
OCTOBER 2017

QUALITY ASSURANCE PROGRAM : LEVEL 2

SURVEYED BY : VHB
SURVEYED DATE : 2016

DATUM
VERTICAL: NAVD 1988
HORIZONTAL: NAD 1983

CONSTRUCTION IS TO BE CARRIED ON IN ACCORDANCE WITH THESE PLANS AND THE STANDARD SPECIFICATIONS FOR CONSTRUCTION DATED 2011, AS APPROVED BY THE FEDERAL HIGHWAY ADMINISTRATION ON JULY 20, 2011 FOR USE ON THIS PROJECT, INCLUDING ALL SUBSEQUENT REVISIONS AND SUCH REVISED SPECIFICATIONS AND SPECIAL PROVISIONS AS ARE INCORPORATED IN THESE PLANS.

20 0 20
SCALE IN FEET

APPROVED _____ DATE _____

PROJECT MANAGER : G.L. BAKOS, P.E.

PROJECT NAME : ST. ALBANS KINGMAN STREET
PROJECT NUMBER : TAP TA15(3)

SHEET 1 OF 8 SHEETS

MATERIAL TOLERANCE	
PAVEMENT	= 1/4"
SUBBASE	= 1"
SAND BORROW	= 1"

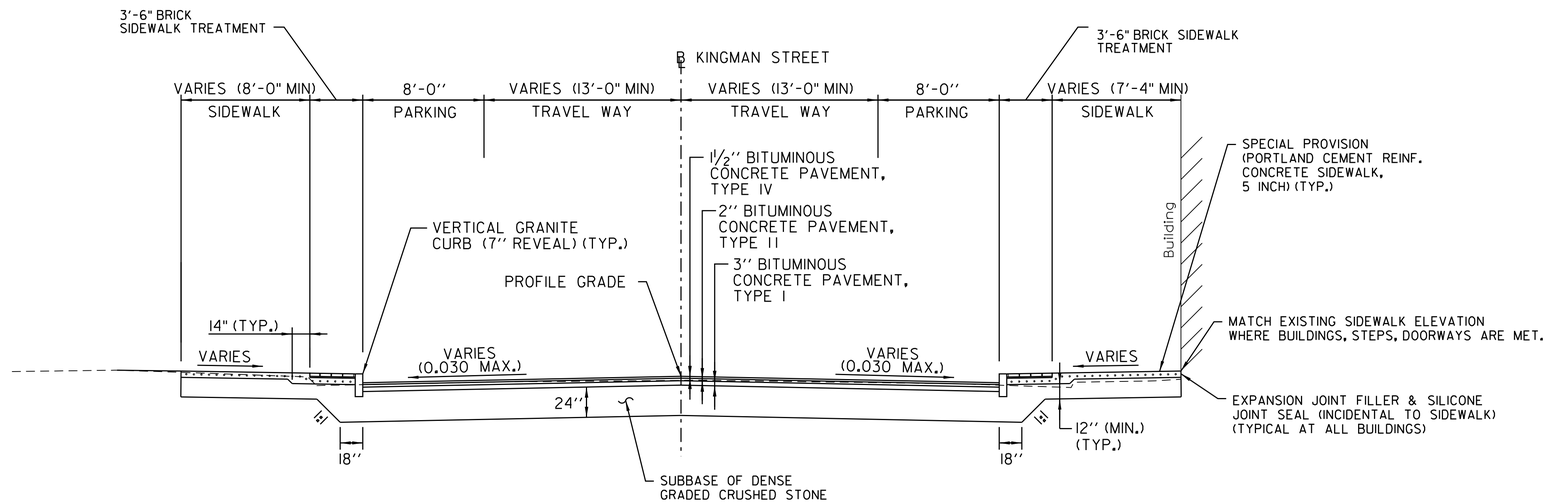

KINGMAN STREET

(STA 50+20.8 - 55+40.2)
NOT TO SCALE

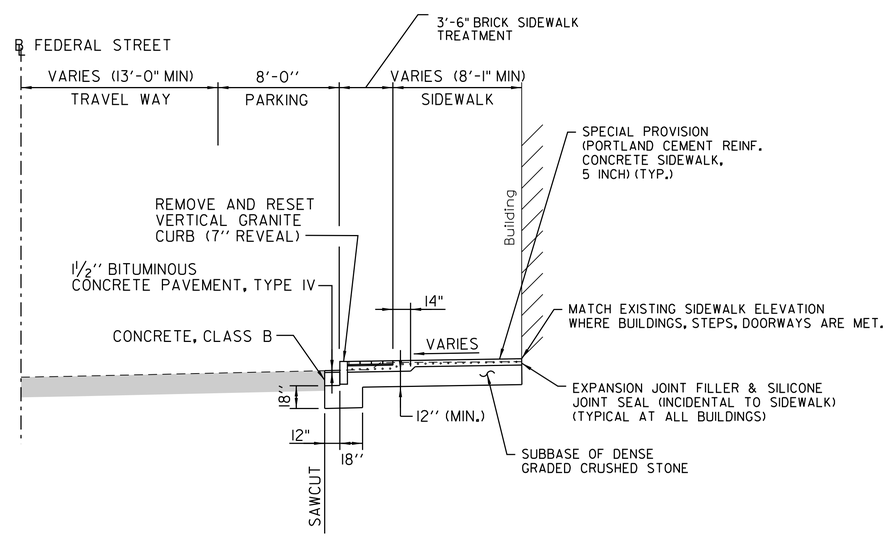

FEDERAL STREET

(STA 604+20.1 - 605+19.6)
NOT TO SCALE

PROJECT NAME: ST. ALBANS - KINGMAN STREET	
PROJECT NUMBER: TAP TA15(3)	
FILE NAME: 52399_XS.dgn	PLOT DATE: 10/5/2017
PROJECT LEADER: G.L. BAKOS	DRAWN BY: C.L. CILLEY
DESIGNED BY: K.M. HUBERDEAU	CHECKED BY: G.L. BAKOS
TYPICAL SECTIONS	SHEET 2 OF 8

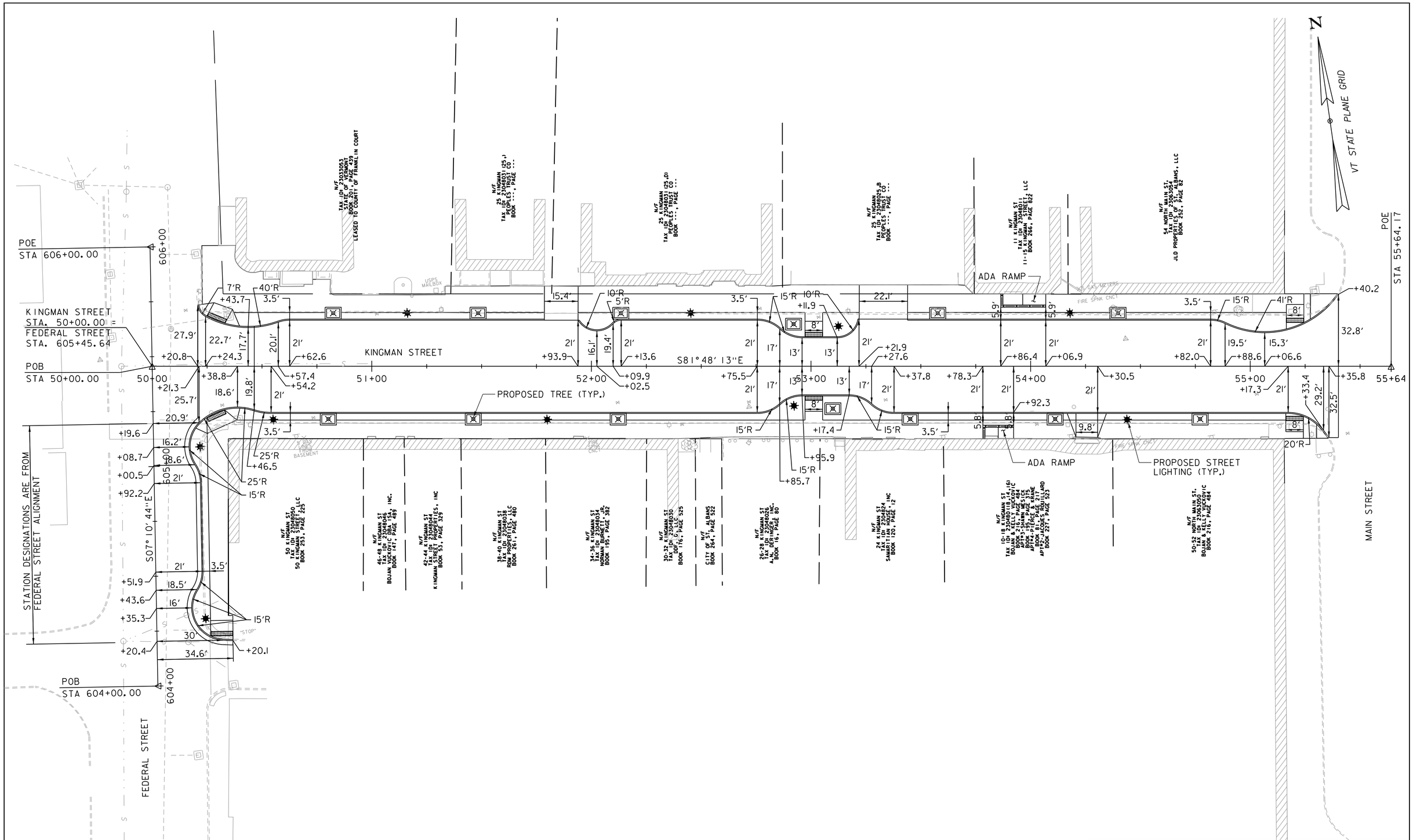

PROJECT NAME:	ST. ALBANS - KINGMAN STREET
PROJECT NUMBER:	TAP TA15(3)

FILE NAME: 52399_XS.dgn	PLOT DATE: 10/5/2017
PROJECT LEADER: G.L. BAKOS	DRAWN BY: C.L. CILLEY
DESIGNED BY: K.M. HUBERDEAU	CHECKED BY: G.L. BAKOS
LAYOUT PLAN	SHEET 3 OF 8

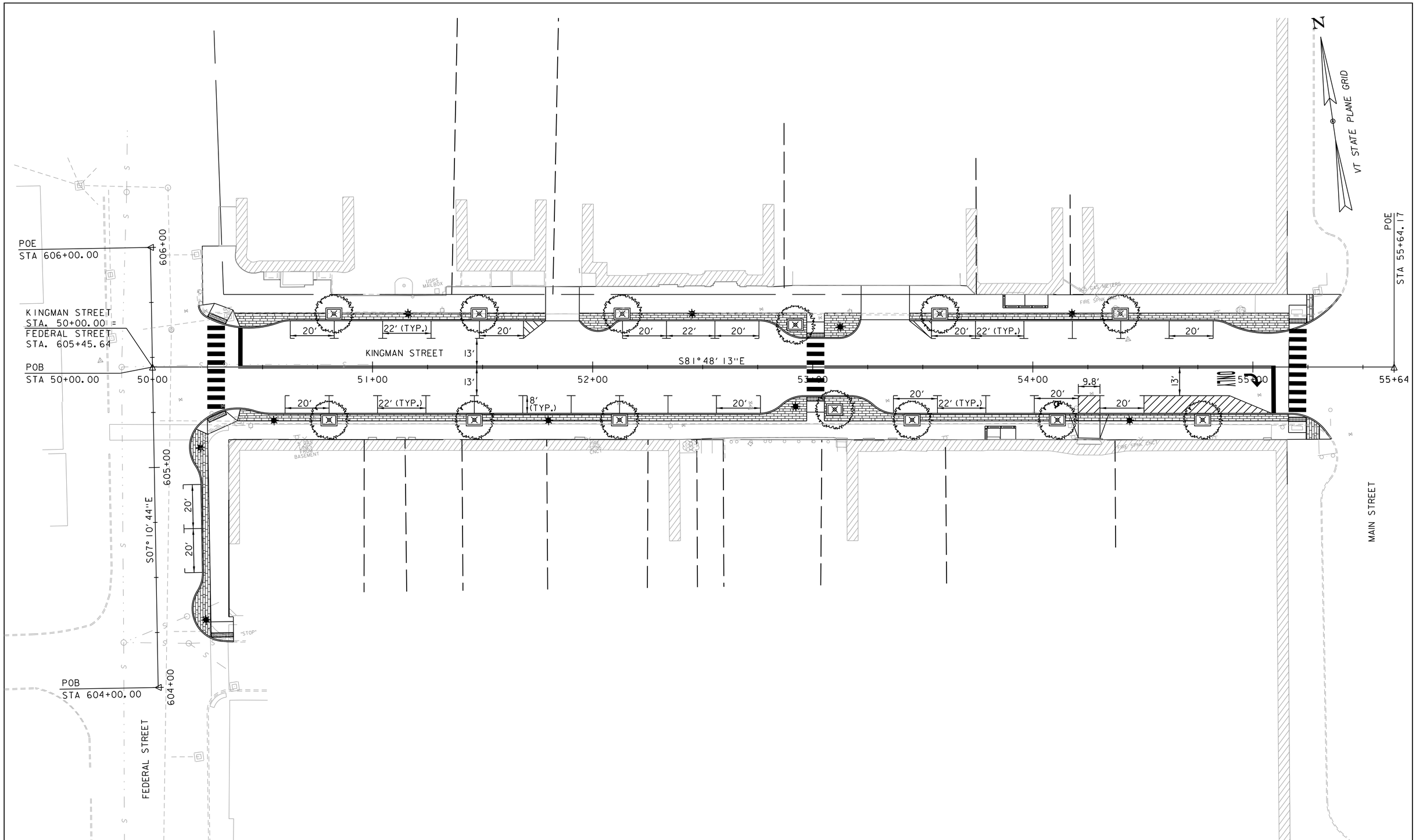

PROJECT NAME:	ST. ALBANS - KINGMAN STREET
PROJECT NUMBER:	TAP TA15(3)

FILE NAME: 52399_XS.dgn	PLOT DATE: 10/5/2017
PROJECT LEADER: G.L. BAKOS	DRAWN BY: C.L. CILLEY
DESIGNED BY: K.M. HUBERDEAU	CHECKED BY: G.L. BAKOS
STREETSCAPE AND PAVEMENT MARKING PLAN	SHEET 4 OF 8

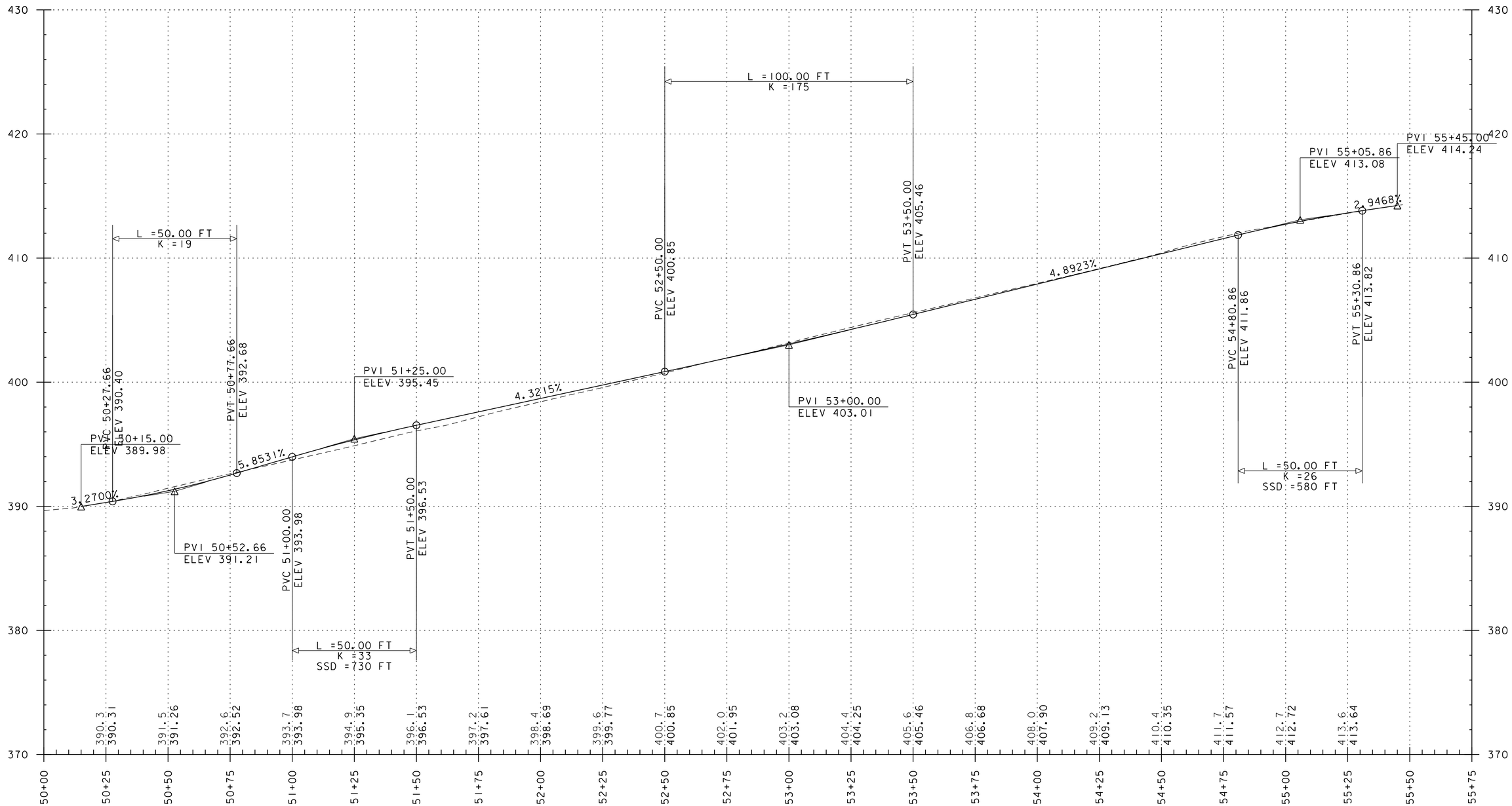

NOTE:

GRADES SHOWN TO THE NEAREST TENTH REPRESENT EXISTING GROUND ELEVATION ALONG THE CENTERLINE.
GRADES SHOWN TO THE NEAREST HUNDRETH REPRESENT FINISH GRADE ELEVATION ALONG THE CENTERLINE.

PROJECT NAME: ST. ALBANS - KINGMAN STREET	
PROJECT NUMBER: TAP TA15(3)	
FILE NAME: 52399_XS.dgn	PLOT DATE: 10/5/2017
PROJECT LEADER: G.L. BAKOS	DRAWN BY: C.L. CILLEY
DESIGNED BY: K.M. HUBERDEAU	CHECKED BY: G.L. BAKOS
PROFILE	SHEET 5 OF 8

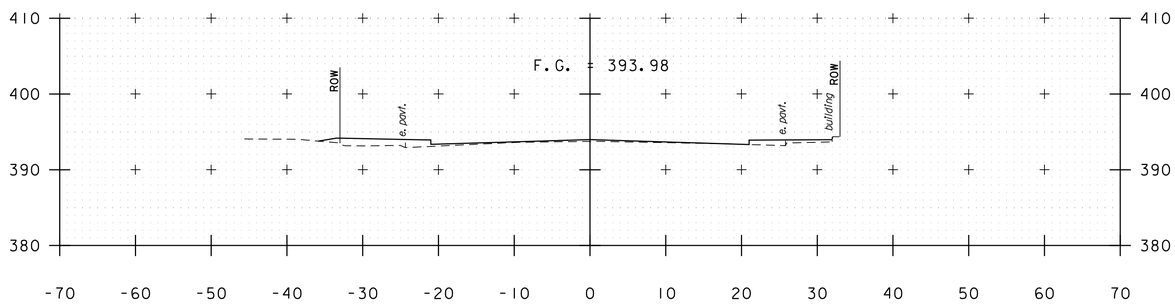

51+00

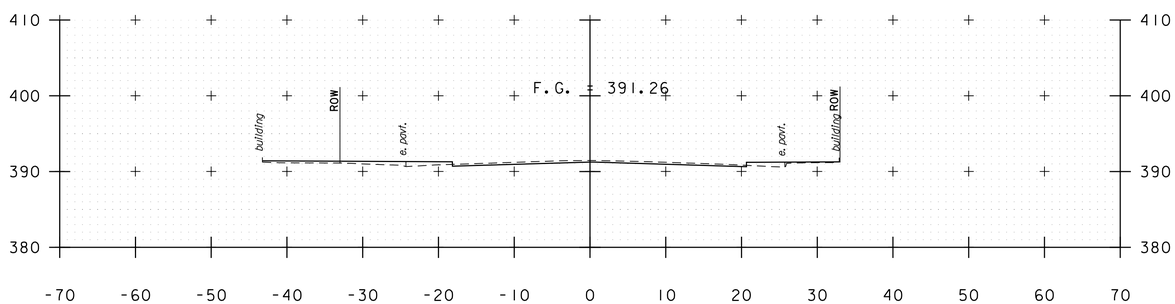

50+50

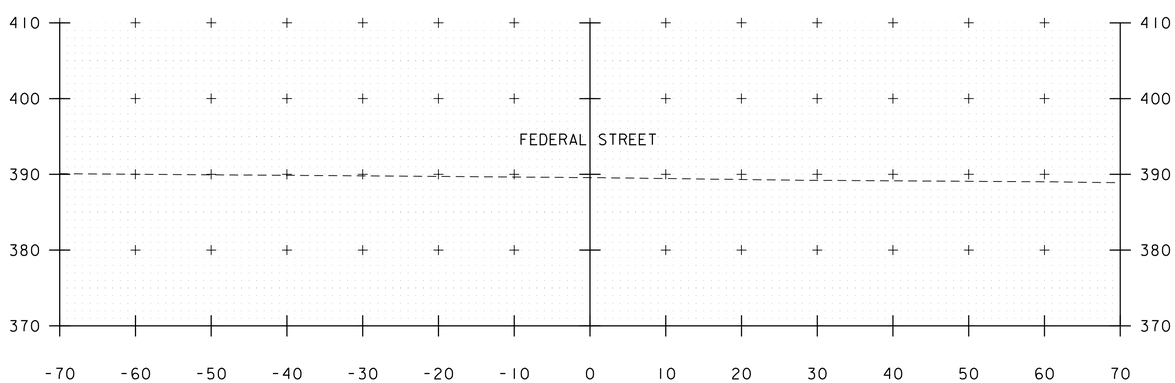

50+00

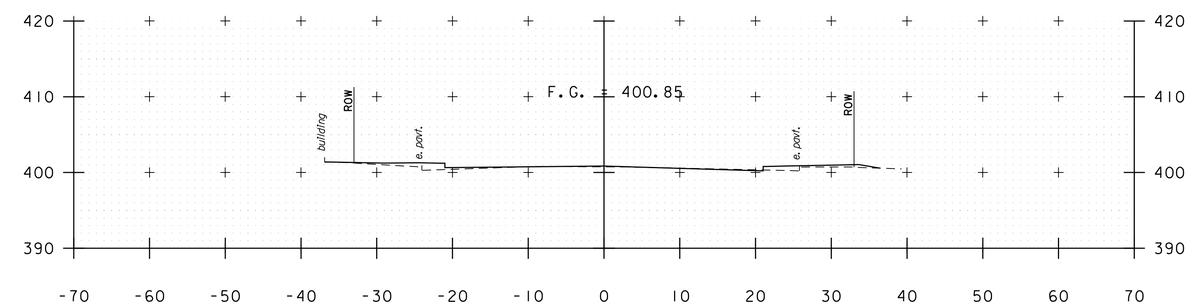

52+50

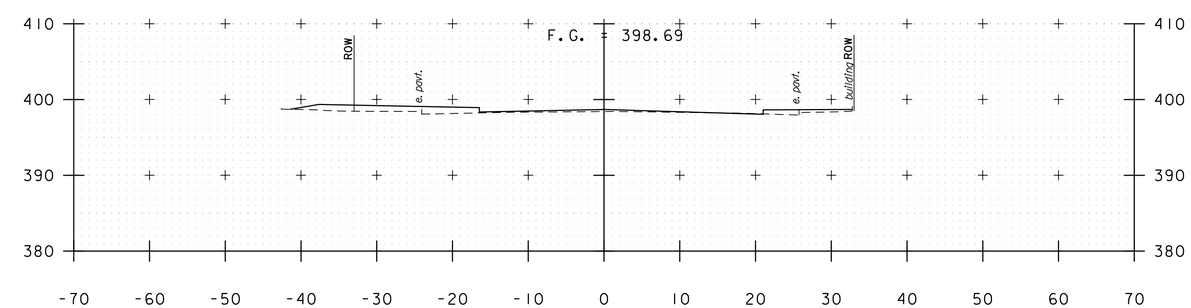

52+00

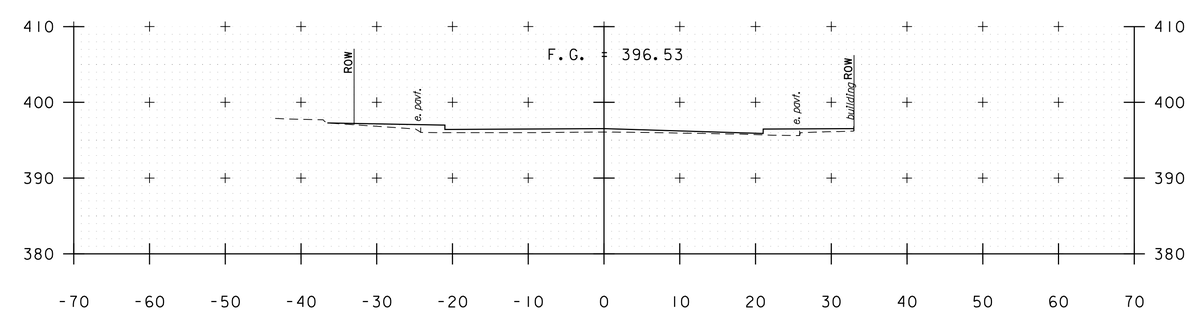

51+50

KINGMAN STREET

PROJECT NAME:	ST. ALBANS - KINGMAN STREET
PROJECT NUMBER:	TAP TA15(3)

FILE NAME: 52399_XS.dgn	PLOT DATE: 10/5/2017
PROJECT LEADER: G.L. BAKOS	DRAWN BY: C.L. CILLEY
DESIGNED BY: K.M. HUBERDEAU	CHECKED BY: G.L. BAKOS
CROSS SECTIONS	SHEET 6 OF 8

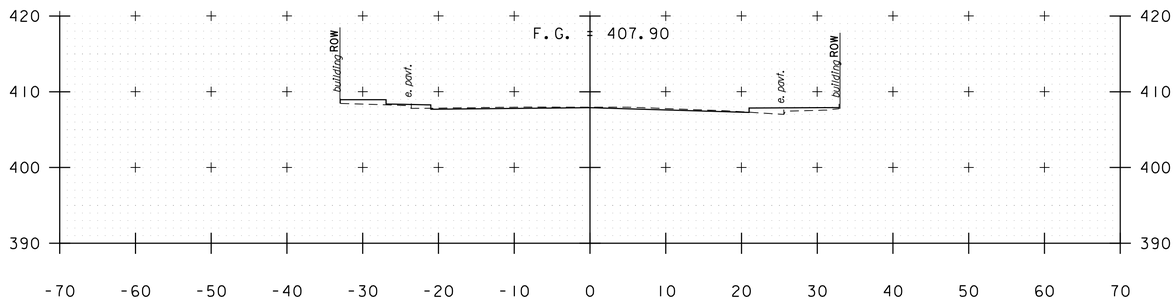

54+00

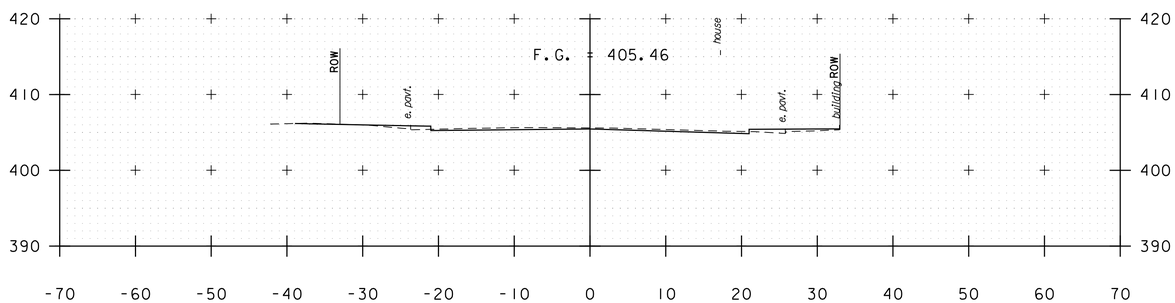

53+50

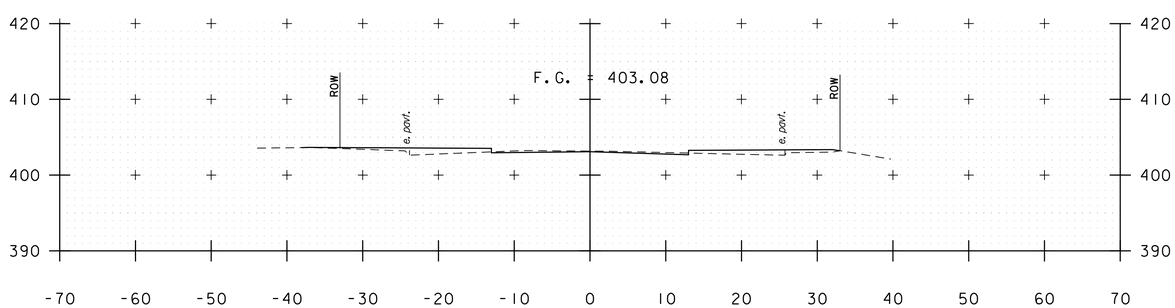

53+00

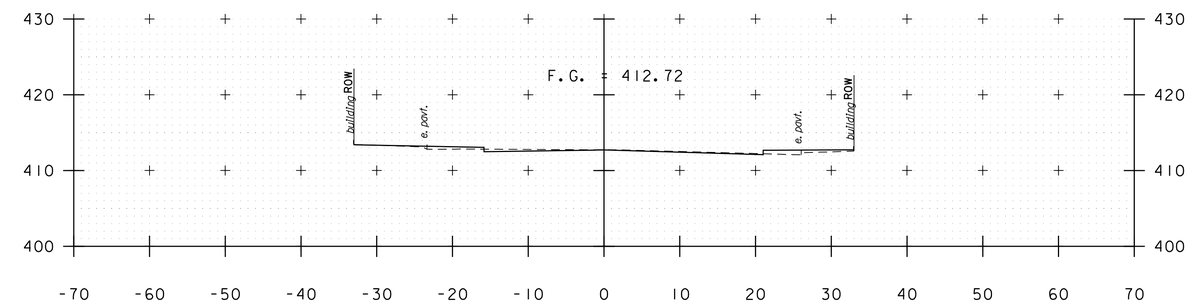

55+00

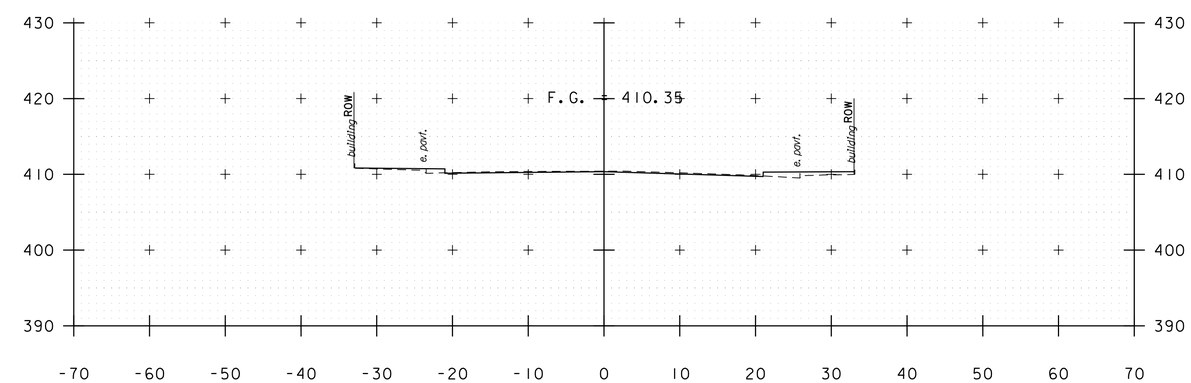

54+50

KINGMAN STREET

PROJECT NAME: ST. ALBANS - KINGMAN STREET	
PROJECT NUMBER: TAP TA15(3)	
FILE NAME: 52399_XS.dgn	PLOT DATE: 10/5/2017
PROJECT LEADER: G.L. BAKOS	DRAWN BY: C.L. CILLEY
DESIGNED BY: K.M. HUBERDEAU	CHECKED BY: G.L. BAKOS
CROSS SECTIONS	SHEET 7 OF 8

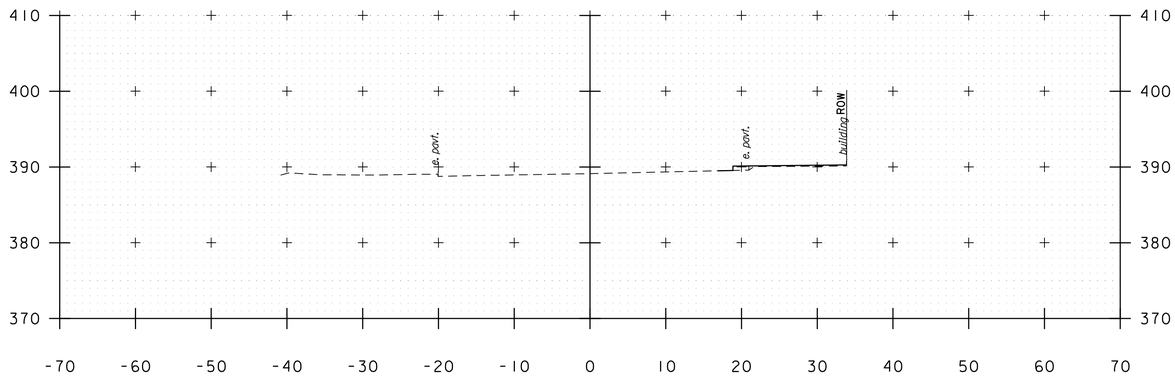

605+00

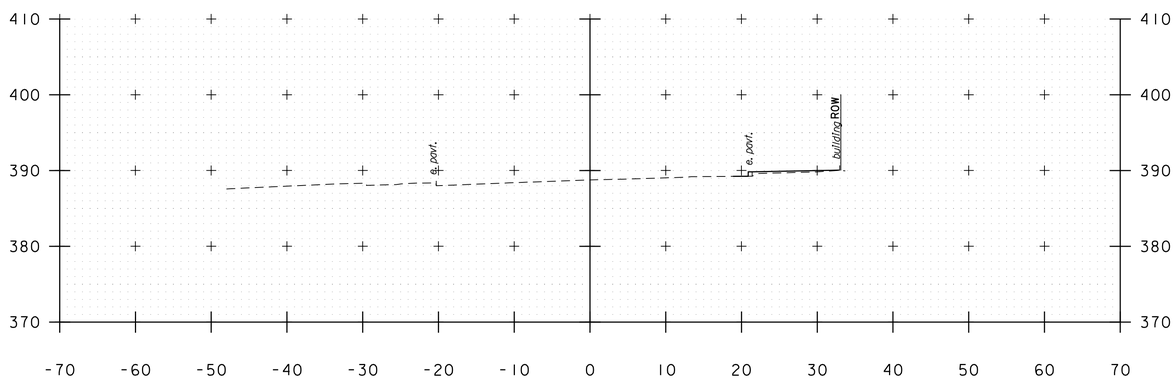

604+50

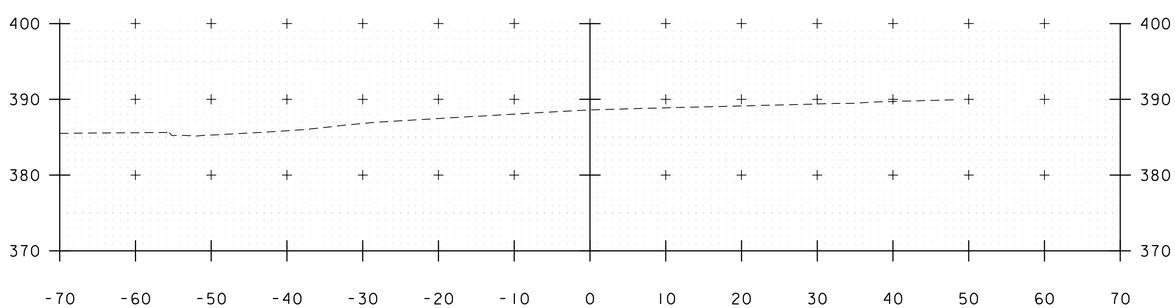

604+00

FEDERAL STREET

PROJECT NAME: ST. ALBANS - KINGMAN STREET	
PROJECT NUMBER: TAP TA15(3)	
FILE NAME: 52399_XS.dgn	PLOT DATE: 10/5/2017
PROJECT LEADER: G.L. BAKOS	DRAWN BY: C.L. CILLEY
DESIGNED BY: K.M. HUBERDEAU	CHECKED BY: G.L. BAKOS
CROSS SECTIONS	SHEET 8 OF 8